TE·CO®

WORKHOLDING



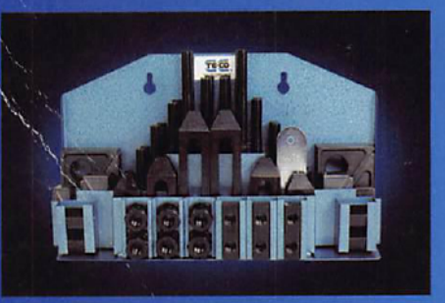

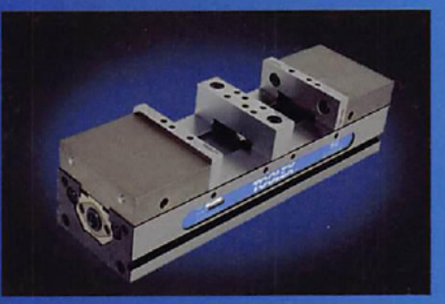



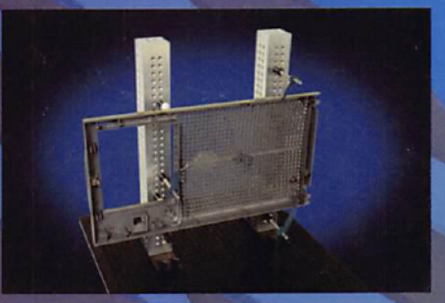





MASTER CATALOG

ANGIC GLOBAL SOLUTIONS

Get quote

Angic Global Solutions 1-888-872-0690

https://www.AngicGlobal.com Sales@AngicGlobal.com

TE-CO'S BUSINESS PHILOSOPHY

TE-CO believes in the application of the Golden Rule to all phases of our business including relationships ... with our customers, management, employees, stockholders, sales representatives, suppliers, government, and neighbors. We have definite obligations to each. TE-CO is firmly established in the concept of profitable free enterprise, we recognize that our success is linked with that of many others and must be developed through enlightened self-interest.

We therefore believe that our business is bound by this creed:

Customers are entitled to quality products at a fair price. Our objective has always been "Satisfied Customers" who will rely on us to help them solve their problems and meet their needs on both an immediate and long-term basis.

Employees, with their knowledge, skill, dedication, and loyalty are our most valuable resource. TE-CO is committed to developing a climate that will enable people to grow with the Company to the best of their ability.

Shareholders have made the investment of the capital that creates new facilities, new products, and new jobs, and are entitled to a fair return of their investment.

Suppliers and their sales representatives, with their specialized knowledge of the products and services they offer, play an important role in the continuing profitable operation of our Company.

We believe that the Company should be a good neighbor in the communities where it operates and where its employees live.

POLICIES & WARRANTY

ENGINEERING CHANGES: Specification and engineering data are subject to change without notice. Contact TE-CO's engineering department for current information if certain specifications are critical to your design.

MANUFACTURING POLICY: Products supplied by TE-CO are high quality and adhere to manufacturing standards. Tolerances are uniformly held in accordance with catalog specifications. TE-CO items are intended for use by knowledgeable and experienced workers. If you have any difficulty, contact us for replacement.

DAMAGED, SHORT OR LOST SHIPMENTS: Immediately place a claim with your local UPS office. Keep all damaged product and packaging for inspection by UPS. Notify TE-CO so we can reship your merchandise.

RETURNED GOODS: Materials cannot be returned without authorization. Final credit will be determined as follows:

- Only catalog items suitable for resale may be returned
- Customers need to obtain an RGA# by contacting a TE-CO Customer Service representative and reference the RGA# on the returned goods.
- Invoice number and date must be furnished.
- Follow packing instructions, if applicable, for returning goods.
- Transportation charges must be prepaid.
- Credit value will be issued at invoice price less a minimum 20% restocking charge (minimum charge $10.00).
- Specials cannot be returned.

MODIFICATION OF STANDARD COMPONENTS: The great majority of components can be modified quickly and economically to meet your design requirements. Consult the factory or your local distributor.

MINIMUM BILLING: Minimum invoice charges $50.00 list. All under minimum invoices will indicate a $10.00 charge.

LIMITED WARRANTY: All goods purchased from TE-CO shall be free from defects in materials and workmanship under normal conditions of use for a period of six months from the date of delivery. This warranty is the sole warranty and is expressly in lieu of all other warranties, express or implied, including but not limited to any implied warranty of merchantability or fitness for a particular purpose. The liability of TE-CO, to any purchaser shall be limited exclusively to the cost of replacement or repair of defective parts, and shall not include liability for any direct, consequential or incidental damages whatsoever, whether foreseen or unforeseen, including but not limited to lost profits, lost sales, or injury to persons or property.

ISA INDUSTRIAL SUPPLY ASSOCIATION · AMT · TCMA TOOLING COMPONENT MANUFACTURERS ASSOCIATION INTERNATIONAL · SME

NIDA-SIDA MANUFACTURER
CODE NUMBER 698409

UPC MANUFACTURER NUMBER 7-27122

© ANGIC GLOBAL SOLUTIONS Get quote

Angic Global Solutions 1-888-872-0690
https://www.AngicGlobal.com Sales@AngicGlobal.com

TABLE OF CONTENTS



Tooling Components..... 1-64



Gaging & Inspection 65-86



Spring Loaded Devices..... 87-106



Toggle Clamps..... 107-118



Hoist Rings 119-140

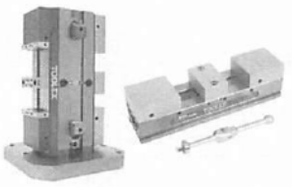

Vise Systems 141-186

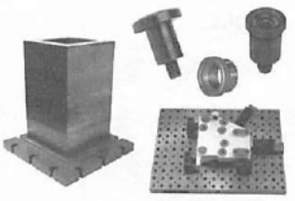

Columns & Plates..... 187-192

Get quote

Angic Global Solutions 1-888-872-0690
https://www.AngicGlobal.com Sales@AngicGlobal.com

INDEX

Tooling Components


Kit - Super Clamp 2


Kit - Punch Press 2


Kit - T-Nut & Stud Kit 3


Kit - Milling Machine Clamp..... 3


Kit - Machinist Clamp..... 4


Kit - Expanded Clamp 4


Kit - Basic Clamp..... 5


Kit -CNC Fixturing 5


Step Blocks..... 7


Kit - Step Block & Clamp..... 6


Kit - Step Block 6

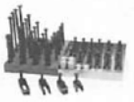
Kit - Jig Bore 7

Jig Bore Kit Accessories..... 7-8


Aluminum Heel Rest 7


Hex Bolt..... 7


Stud..... 7


T-Bolt..... 7


U-Clamp..... 8


Single Toe Clamp..... 8


Threaded Rod..... 8


Driver Studs - Stainless Steel..... 8


Driver Studs 9-10


Driver Studs-Various Thread Lengths 11


Studs - Metric..... 12


Heavy Duty T-Slot Bolts - 4140 Steel ... 13


T-Slot Cleaners..... 13


Tugger® T-Slot Bolts 14


Tugger® T-Slot Bolt Super Clamp Kit 15


Tugger® T-Slot Bolt Kit 15


Tugger® T-Slot Bolt/Stud Kit 15


Stainless Steel T-Bolts..... 16


Heavy Duty 4140 Steel T-Bolts..... 16


Tugger® T-Bolts..... 17


Eye Bolts..... 18


Latch Swing Bolts 18


Plain Forged Eye Bolts..... 19


Shoulder Forged Eye Bolts..... 19


T-Slot Nuts..... 20-21

9 2-1274 • www
Get quote
Angic Global Solutions 1-888-872-0690
https://www.AngicGlobal.com Sales@AngicGlobal.com

INDEX


Stainless Steel T-Nuts 21


Quarter Turn T-Slot Nuts 22


Flange Nuts 22


Stainless Steel Flange Nuts 23


Swivel Flange Nuts 23


Spherical Flange Nuts -
Steel & Stainless Steel 24


Spherical Flange Nut Assemblies 24


Stainless Steel Spherical
Flange Nut Assemblies 24


Coupling (Extension) Nuts 25


Metric Coupling (Extension) Nuts 25


Heavy Hex Nuts 25


Heavy Hex Jam Nuts 25


Hardened Flat Washers 26


Heavy Duty Hardened Flat Washers 26


Heavy Duty Hardened Flat Washer
Assortment 27


Hardened Flat Washer Assortment 27


Metric Heavy Duty Hardened
Flat Washer Assortment 27


Metric Hardened Flat
Washer Assortment 27


Spherical Washers 28-29


Nuzzler® Edge Clamps 30-31


Nuzzler® Edge Clamp Kits 32

Nuzzler® Edge Clamp Accessories 33


Aluminum Nose Cap 33


Clamp Washers 33


T-Handle Wrench 33


Adjustment Screws 33


Center Clamps 34


Clamp Rest 34


Clamp Supports 34


Shaft Collars 34


Plain Clamps 35


Tapped End Clamps 35


Serrated End Clamps 36


Soft Clamps 36


Step Clamps 37


Taper Nose Clamps 37


Forged Plain Clamps 37


Forged Tapped Plain Clamps 37


Forged "U" Clamp 38


Forged Finger-Tip Clamp 38

832-1274 • w

Get quote

Angic Global Solutions 1-888-872-0690
https://www.AngicGlobal.com Sales@AngicGlobal.com

INDEX


Forged Gooseneck Clamps..... 38


Forged Tapped Gooseneck Clamps 38


Machinable Fixture Clamps 39


Pitbull Clamps..... 39

Fixture Clamps..... 40

Uniforce Clamps 40

Knife Edge Clamps 40


TalonGrip Clamps 41


VersaGrip Clamps 41


ID Expansion Clamps..... 42


Machinable Uniforce Clamps..... 42


Compact Toe Clamps..... 43


Dyna-Force Clamps..... 43


Hand Knob Head Swivel
Screw Clamps..... 44


Hex Socket Head Swivel
Screw Clamps..... 44


Knurled Head Swivel
Screw Clamps..... 44


Small Pad for Swivel Screw Clamps..... 45


Large Pad for Swivel Screw Clamps..... 45


Hand Knob Head Swivel
Screw Clamp Assemblies..... 45


Hex Head Swivel Screw
Clamp Assemblies..... 46


Knurled Head Swivel Screw
Clamp Assemblies..... 46


Dog Point Hand Knob Screws..... 47


Dog Point Knurled Head Screws 47


Quarter Turn Screws..... 47


Cast Aluminum Hand Knobs..... 48


Plastic Ball Knobs..... 48


Taper Index Plungers..... 49


Taper Index Bushings 49


Straight Index Plungers..... 50


Straight Index Bushings 50


Rotary Cam Operated
Taper Index Plungers..... 51


Vertical Cam Operated
Taper Index Plungers..... 51


Rotary Cam Operated
Straight Index Plungers..... 52


Vertical Cam Operated
Straight Index Plungers..... 53


Tapped Jig Feet 54


Button Jig Feet 54

9 2-1274 • www
Get quote
Angic Global Solutions 1-888-872-0690
https://www.AngicGlobal.com Sales@AngicGlobal.com

INDEX


Pre-Set Buttons 54


Plain Fixture Keys 55


Toggle Pads 55


Leveling Pads 56


Zinc Plated Leveling Pads 56


Leveling Pad & Stud Assembly 56


Ball Bearing Parallel 57


Ball Bearing Parallel Kit 57


Threaded Insert Kit 58


E-Z Lok Thin wall Thread Repair Kit 58

Threaded Inserts 59


Screw Locking Inserts 59


Keylocking Inserts 60


Inserts for Wood 62


Coil Thread Inserts 63


Collet Stop Assembly 64


Adjustable Collet Stop 64


Collet Stop Extension Tube 64


Collet Stop Wrench 64

Gaging & Inspection


Aluminum Fixture Plates 67

Fixturing Towers 68

CMM Fixturing Kits 69-70


Basic Kit 69


Comprehensive Kit 70

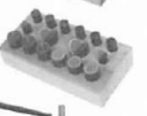
Magnetic Kit 71


Soft Touch Clamps 71


Small Toggle Clamp w/Pad 72


Large Toggle Clamp w/Pad 73


T-Handle Spring Stop w/Pad 73


Adjustable Positioner 73


Standoffs 74


Pin Rest 74

Thread Adapter 75


Delrin® Cone 75


Delrin® Holder for Magnetic Vee Standoff 75


Magnetic Rest Pad 76


Magnetic Vee Standoff 76

Get quote

Angic Global Solutions 1-888-872-0690
https://www.AngicGlobal.com Sales@AngicGlobal.com

INDEX


Magnetic Pin Rest 76

Magnetic Vee Block 76


Delrin® Height Adjuster 77


Screw Jack 77


Adjustable Ball Positioner 78


Toggle Pad 78


Swivel Joint Rest 78


Knurled Knob w/Stud 79


Cap Screw 79


Clamp Support 79


Hex Jam Nut 79


Hardened Flat Washer 79


Plastic Clamp Kit 80


English CMM Clamp Kit 81


Metric CMM Clamp Kit 81


Tapped Hole Location Gages 82


Tapped Hole Location Gage Kit 82


Premium Short Shank Inspection Ball 83


Premium Short Shank Inspection Ball Kit 83


Precision Slip Fit Shoulder Tooling Ball 83


Shoulder Tooling Balls 84


Standard Tooling Ball 84

Shoulder Construction Ball 85


Carbide Ball 85

Tooling Ball Cover 85

Spring Loaded Devices


Ball Plungers 88


Ball Plungers - Hexagon Socket 89


Press Fit Ball Plungers 90

Press Fit Ball Plungers No Flange 90


Standard Spring Plungers 91


Spring Plungers Slotted 92


Metric Spring Plungers 92-93


Spring & Ball Plunger Wrenches 94


Ball Buttons 94


Press Fit Spring Plungers 94

2-1274 • www
Get quote
Angic Global Solutions 1-888-872-0690
https://www.AngicGlobal.com Sales@AngicGlobal.com

INDEX


Posi Hex Steel Plungers 95


Hex Nose Plungers..... 96


Short Spring Plungers 97


Hand Retractable Spring Plungers - Quick Release "Pull Ring"..... 98


Stubby Hand Retractable Spring Plungers – Quick Release Pull Ring 98


Delrin® Knob Steel/Stainless Steel Hand Retractable Spring Plungers 99


Knurled Knob Hand Retractable Spring Plungers – Steel & Stainless Steel 100


Lever Type Plungers - Locking 101


Steel Hand Retractable Spring Plungers -Locking..... 101


Lever Type Plungers - Non-Locking ... 102


Lever Type Stubby Steel Plungers..... 102


Weldable Plungers and Latches 103


Spring Stops..... 104

Information/Inch Tap Drill Sizes for Spring Plungers 105

Toggle Clamps


Vertical Handle..... 108-110

Horizontal Handle..... 111-112


Straight Line Action 113-115

Pull Action 116-118


Spindle Assemblies..... 118

Bolt Retainers 118



Hoist Rings


Safety Engineered Hoist Rings ... 120-121

Stainless Steel Safety Engineered Hoist Rings..... 122


Safety Engineered Hoist Ring Kits..... 123


Bushing, Washer, Screw Kits..... 124


Tuff Forged™ Swivel Hoist Rings 125


Tuff Forged™ Side Pull Hoist Rings... 126

Forged Hoist Rings 126


Side Load Hoist Rings..... 127


Large Opening Swivel & Pivot 127

Pivot Lifting Plates 128


Round Base Swivel & Pivot Hoist Rings..... 129

Get quote

832-1274 • w Angic Global Solutions 1-888-872-0690
https://www.AngicGlobal.com Sales@AngicGlobal.com

INDEX


Street Plate Lifting Ring..... 130


Street Plate Nut..... 131


Super Forged Eyebolt..... 131


Alloy Steel Forged Rings..... 131


Lifting Ring..... 132

Safety Precautions..... 133-140

Toolex Vise Systems


Introduction/Features/Benefits... 142-145

ReLock® Double Station Vise..... 146


Double Station Vise with Machinable Soft Jaws 146


Double Station Vise w/Hard Jaws..... 146


Single Station Conversion Plate for ReLock 2-Station Vise 147


Compact Vise & Accessories..... 148


ReLock® Eight Station Vise 149

8 Station Vise w/Mach. Soft Jaws..... 149


8 Station Vise w/Mach. Hard Jaws..... 149


ReLock-8 Support Bracket..... 150


ReLock-8 Adapter Plate 150


ReLock-8 Support/Alignment Nose ... 150


Single Station Conversion Plates for ReLock 8-Station Vise..... 150


ReLock 8 Station Compact Quad..... 151


ReLock System Starter Packages..... 152


SnapLock Machinable Fixture Jaws... 154


SnapLock Machinable Fixture Jaws Single Station Applications..... 155


SnapLock Machinable Fixture Jaws - Full Coverage..... 155


SnapLock Carrier Jaws..... 156


SnapLock Fixture Plates 156


AccuSnap Master Jaws..... 158


AccuSnap Individual Parallel Sets..... 158

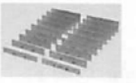
AccuSnap Parallel Kits..... 159


AccuSnap Mill Angles..... 159


AccuSnap Mill Angle Kits..... 160


AccuSnap Machinable Fixture Jaws .. 160

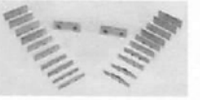
AccuSnap Starter Packages for Competitor Single and Double Station Vises 161


AccuSnap Modular Workstops 162

AccuSnap Spacers..... 162

Get quote
Angic Global Solutions 1-888-872-0690
https://www.AngicGlobal.com Sales@AngicGlobal.com

INDEX


Holder Racks for AccuSnap Parallels..... 163

QuickChange Master Jaws..... 165


QuickChange Ind. Parallel Sets..... 165

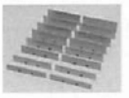
QuickChange Parallel Kits..... 166


QuickChange Mill Angles 166


QuickChange Mill Angle Kits..... 167


QuickChange Machinable (soft) Fixture Jaws 168


QuickChange Starter Packages..... 168


Locator Jaw System Master Jaws..... 169


Bolt-On Aluminum Soft Jaws 169


Standard Hard Jaws 169


Vise Clamps..... 170


Vise Fixture Keys..... 170


Chip Shield Covers for Toolex Double Station Vise..... 170


Universal Workstop..... 171


Vise Mounting Kit 171


QuickStop 171

Baseplate Mounting Info..... 172-174

ReLock Vise Parts List 175-178

AccuSnap Parts List..... 179

QuickChange Parts List 180


4" Single Station Vise..... 181


6" Single Station Vise 182


8" SIngle Station Vise 183

Columns & Plates

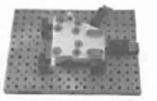
Fixture Plates 188


Columns & Metric Columns 189

T-Columns & Metric T-Columns..... 190

Get quote

832-1274 • w Angic Global Solutions 1-888-872-0690
https://www.AngicGlobal.com Sales@AngicGlobal.com

ALPHABETICAL INDEX

AccuSnap Individual Parallel Sets 158
AccuSnap Machinable Fixture Jaws 160
AccuSnap Master Jaws 158
AccuSnap Mill Angles 159
AccuSnap Mill Angle Kits 160
AccuSnap Modular Workstops 162
AccuSnap Packages 161
AccuSnap Parallel Kits 159
AccuSnap Spacers 162
AccuSnap Starter Packages 161
Adapter Plates - ReLock 150
Adjustable Ball Positioner 78
Adjustable Positioner 73
Adjustment Screws - Edge Clamps 33
Alloy Steel Forged Rings 131
Aluminum Heelrest 6
Aluminum Nose Cap 33
Assemblies – Swivel Screw Clamps 46-47
Ball - Carbide 85
Ball Bearing Parallel Kits 57
Ball Bearing Parallels 57
Ball Buttons 94
Ball Knobs - Plastic 48
Ball Positioner - Adjustable 78
Ball Plungers 88-90
Ball Plungers - Hexagon Socket 89
Ball Plungers - Metric 88-89
Ball Plungers - Nylon Ball 88, 90
Ball Plungers - Press Fit 90
Ball Plungers - Press Fit No Flange 90
Ball Plunger Wrenches 94
Balls, Carbide 95
Balls, Construction 95
Balls - Inspection 83
Balls - Precision 83
Balls - Tooling 83-85
Basic Clamp Kits 5
Bolt-On Aluminum Soft Jaws 169
Bolt Retainers for Toggle Clamps 118
Bolts - Eye 18-19
Bolts - Hex Head 7
Bolts - Latch (Swing) 18
Bolts - Plain Forged Eye 19
Bolts - Shoulder Forged Eye 19
Bolts - T - Tugger 17
Bolts - T - Heavy Duty 4140 Steel 16
Bolts - T - Stainless Steel 16
Bolts - T-Slot 14
Bolts - T-Slot - Heavy Duty 4140 Steel 13
Bushing, Washer, Screw Kits 124
Button - Jig Feet 54
Buttons - Pre-Set 54
CMM Clamp Accessories 79
CNC Fixturing Kits 5
Cap Screws 79
Carbide Balls 85
Cast Aluminum Hand Knobs 49
Center Clamps 34
Chip Shield Cover for Toolex Vise 170
Clamp Accessories - Edge 33
Clamp Accessories - Toggle 118
Clamp Kits - Plastic CMM 80
Clamp Kits - English CMM 81
Clamp Kits - Metric CMM 81
Clamp Rest 34
Clamps - Center 34
Clamps - Compact Toe 43
Clamps -Dyna-Force 43
Clamps - Edge 30-31
Clamps - Edge - Kits - Nuzzler 32
Clamps - Edge - Nuzzler 30-31
Clamps - Fixture 40
Clamps - Forged Finger-Tip 38
Clamps - Forged Gooseneck 38
Clamps - Forged Plain 37
Clamps - Forged Tapped Gooseneck 38
Clamps - Forged Tapped Plain 37
Clamps - Forged "U" 38
Clamps - Hand Knob Head Swivel 44
Clamps - ID Expansion 42
Clamps - Knife Edge 40
Clamps - Machinable Fixture 39
Clamps - Machinable Uniforce 42
Clamps - Pitbull 39
Clamps - Plain 35
Clamps - Plain Metric 35
Clamps - Serrated End 36
Clamps - Serrated End - Metric 36
Clamps - Single Toe 8
Clamps - Soft 71
Clamps - Soft Touch 87
Clamps - Step 37
Clamps - Taper Nose 37
Clamps - Tapped End 35
Clamps - TalonGrip 41
Clamps - Toggle 72,108-118
Clamps - "U" 8
Clamps - Uniforce 40
Clamps - VersaGrip 41
Clamp Supports 34, 79
Clamp Washers - Edge Clamps 33
Carrier Jaws - SnapLock 176
Coil Thread Inserts - Economy Kit 63
Coil Thread Inserts - Standard Kit 63
Collars - Shaft 34
Collet Stop Assembly 64
Collet Stop - Adjustable 64
Collet Stop Extension Tube 64
Collet Stop Wrench 64
Columns & Plates 187-190
Columns - T - English & Metric 190
Compact Toe Clamps 43
Compact Vise 148
Compact Vise - Single Station 148
Construction Balls 85
Conversion Plates - ReLock 147, 150
Coord. Measuring Mach. Clamp Kit - Eng. 81
Coord. Measuring Mach. Clamp Kit - Met. 81
Coupling (Extension) Nuts 25
Coupling (Extension) Nuts - Metric 25
Delrin Knob Hand Retractable Sp Plungers 99
Delrin Cone 75
Delrin Height Adjuster 77
Delrin Holder for Magnetic Vee Standoff 75
Dog Point Hand Knob Screws 47
Dog Point Knurled Head Screws 47
Double Station Vise Fixture Keys 170
Double-Station Vises - ReLock 146
Driver Studs 8-12
Driver Studs - Metric 12
Driver Studs - Stainless Steel 8
Driver Studs - Various Lengths 11
Dyna-Force Clamp 43
Edge Clamp Accessories - Nuzzler 33
Edge Clamp Kits - Nuzzler 32
Edge Clamps 30-31
Edge Clamps - Nuzzler 30-31
Eight-Station Vises - ReLock 149, 151
Expanded Clamp Kits 4
Extension (Coupling) Nuts 25
Extension (Coupling) Nuts - Metric 25
Eye Bolts 18-19
Eye Bolts - Plain Forged 19
Eye Bolts - Shoulder Forged 19
Eye Bolts - Super Forged 131
Feet - Button Jig 54
Feet - Tapped Jig 54
Fixture Clamps 40
Fixture Clamps - Machinable 39
Fixture Keys - Vise 170, 182
Fixture Tooling Plates - Machining 186
Fixture Tooling Plates - CMM 67
Fixture Plates - SnapLock 156
Fixturing Kits - CNC 5
Flange Nuts 22-24
Flange Nuts - Metric 22
Flange Nuts - Spherical 24
Flange Nuts - Spherical Assemblies 24
Flange Nuts - Spherical Stainless Steel 24
Flange Nuts - Spherical Stainless Assemb. 24
Flange Nuts - Stainless Steel 23
Flange Nuts - Swivel 23
Flat Washer Assortments 27
Flat Washer Assortments - Metric 27
Flat Washers 26-27, 79
Flat Washers - Metric 26-27, 79
Forged - Alloy Steel Rings 131
Forged Clamps - Finger-Tip 38
Forged Clamps - Gooseneck 38
Forged Clamps - Plain 37
Forged Clamps - Tapped Gooseneck 38
Forged Clamps - Tapped Plain 37
Forged Clamps - U 38
Forged Eyebolt - Super 131
Forged Hoist Rings 126
Forged Hoist Rings - Tuff 125-126
Gooseneck Clamps -Forged 38
Gooseneck Clamps -Forged Tapped 38
Hand Knobs - Cast Aluminum 49, 80
Hand Knob Head Swivel Screw Clamps 44-45
Hand Knob Screws - Dog Point 47
Hand Retractable Weldable Plungers 103
Hardened Flat Washers 26-27
Hard Jaws - Standard 169
Heavy Duty 4140 Steel T-Bolts 16
Heavy Duty Flat Washer Asst. 27
Heavy Duty Flat Washer Asst.-Metric 27
Heavy Duty Flat Washers 26-27
Heavy Duty Flat Washers - Metric 26-27
Heavy Duty T-Slot Bolts - 4140 Steel 13
Heavy Hex Jam Nuts 25
Heavy Hex Nuts 25
Heel Rest - Aluminum 7
Hex Bolt 7
Hex Drive Knife Thread Inserts 62

Get quote
Angic Global Solutions 1-888-872-0690
https://www.AngicGlobal.com Sales@AngicGlobal.com

ALPHABETICAL INDEX

Hex Jam Nut 25, 79
Hex Nose Plungers 96
Hex Nose Plungers - Flat 96
Hex Nose Plungers - Long Travel 96
Hex Plungers - Posi 95
Hex Socket Head Bodies for Swivel Screw Cl.... 44
Hoist Rings -Forged 126
Hoist Rings - Lg. Opening Swivel & Pivot 127
Hoist Rings - Lifting 132
Hoist Rings - Pivot Lifting Plate 128
Hoist Rings - Round Base Swivel & Pivot 129
Hoist Rings - Safety Engineered 121-122
Hoist Rings - Safety Engineered Kits 123
Hoist Rings - Side Load 127
Hoist Rings - Stainless Steel Safety Eng. 122
Hoist Rings - Street Plate Lifting 130
Hoist Rings - Swivel & Pivot 129
Hoist Rings - Swivel & Pivot - Metric 127
Hoist Rings - Tuff Forged Side Pull 126
Hoist Rings - Tuff Forged Swivel 125
Holder Rack for AccuSnap Parallels 163
ID Expansion Clamps 42
Index Plungers 49-53
Index Plunger Bushings 50
Inserts - Coil Thread Economy Kit 63
Inserts - Coil Thread Standard Kit 63
Inserts - Hex Drive Knife Thread 62
Inserts - Keylocking 60-61
Inserts - Keylocking Heavy-Duty 61
Inserts - Keylocking Metric 61
Inserts - Knife Thread 62
Inserts - Screw Locking 59
Inserts - Threaded 58-59
Inspection Balls 83-85
Jig Bore Kit 7
Jig Feet - Button 54
Jig Feet - Tapped 54
Keylocking Inserts 60-61
Keys - Fixture 55, 170
Keys - Vise Fixture 170, 182
Kits - AccuSnap Mill Angle 160
Kits - AccuSnap Parallel 159
Kits - Ball Bearing Parallel 57
Kits - Basic Clamp 5
Kits - Hoist Ring Bushing, Washer, Screw 124
Kits - CMM Clamping 68-71, 80-81
Kits - CMM Basic Fixturing 69
Kits - CMM Comprehensive Fixturing 70
Kits - CMM Magnetic Components 71
Kits - CNC Fixturing 5
Kits - Coordinate Measuring Clamp 81
Kits - Edge Clamp 32
Kits - Expanded Clamp 4
Kits - Flat Washer Assortment 27
Kits - Machinist Clamp 4
Kits - Milling Machine Clamp 3
Kits - Nuzzler Edge Clamp 32
Kits - Plastic CMM Clamp 80
Kits - Prem. Inspection Ball - Short Shank 83
Kits - Punch Press 2
Kits - QuickChange Mill Angle 167
Kits - QuickChange Parallel 166
Kits - Safety Engineered Hoist Ring 123
Kits - Step Block 6
Kits - Step Block & Clamp 6
Kits - Super Clamp 2
Kits - T-Nut & Stud 3
Kits - T-Slot Bolt Clamp 15
Kits - T-Slot Bolt/Stud 15
Kits - T-Slot Bolt Super Clamp 15
Kits - Tapped Hole Location Gage 82
Kits - Tugger T-Slot Bolt 15
Kits - Tugger T-Slot Bolt/Stud 15
Kits - Tugger T-Slot Bolt Super Clamp 15
Knife Edge Clamps 40
Knobs - Cast Aluminum Hand 49
Knobs - Plastic Ball 49
Knurled Knob Hand Retractable Sp. Plunger . 100
Knurled Head Bodies Swivel Screw Clamps 44
Knurled Head Screws - Dogpoint 47
Lg. Opening Swivel & Pivot Hoist Ring 127
Large Pads for Swivel Screw Clamps 45
Latch (Swing) Bolts 18
Leveling Pad & Stud Assembly 56
Leveling Pads - Zinc Plated & Steel 56
Leveling Poly Pad - Stud Style 62
Leveling Poly Pad - Tapped Style 62
Lever Type Spring Plungers 101-102
Lifting Plates - Pivot 128
Lifting Rings 132
Lifting Rings - Street Plate 130
Machinable Fixture Clamps 39
Machinable Fixture Jaws - AccuSnap 160
Machinable Fixture Jaws - QuickChange 168
Machinable Fixture Jaws - SnapLock 154-155
Machinable Uniforce Clamps 42
Machinist Clamp Kits 4
Magnetic Components - CMM 76
Magnetic Component Pack 71
Magnetic Pin Rest - CMM 76
Magnetic Rest Pads - CMM 76
Magnetic Vee - CMM 76
Master Jaws - AccuSnap 158
Master Jaws - QuickChange 165
Metric - Ball Plungers 88-90
Metric - Ball Plungers w/ Nylon Ball 88
Metric - CMM Clamp/Fixturing Kits 69-71, 80-81
Metric - Coupling (Extension) Nuts 25
Metric - Driver Studs 11-12
Metric - Flange Nuts 22
Metric - Flat Washer Assortment 27
Metric - Flat Washers 26
Metric - Flat Washers - Heavy Duty 26
Metric - Keylocking Inserts 61
Metric - Lifting Rings 132
Metric - Machinists Clamp Kits 4
Metric - Plain Clamps 35
Metric - Serrated End Clamps 36
Metric - Side Load Hoist Rings 126-127
Metric - Spring Plungers 92-93, 95
Metric - Stainless Safety Eng. Hoist Ring 122
Metric - Step Blocks 7
Metric - Step Block Kits 6
Metric - Super Clamp Kits 2
Metric - T-Nut & Stud Kits 3
Metric - T-Slot Nuts 21
Metric - Tapped Hole Location Gages 82
Mill Angles - AccuSnap 159
Mill Angles - QuickChange 166
Mill Angle Kits - AccuSnap 160
Mill Angle Sets- QuickChange 167
Milling Machine Clamp Kits 3
Modular Workstops - AccuSnap 162
Nose Cap - Aluminum - Edge Clamp 33
Nuts - Coupling (Extension) 25
Nuts - Flange - English & Metric 22
Nuts - Flange Spherical 24
Nuts - Flange Spherical Assemblies 24
Nuts - Flange - Stainless Steel 23
Nuts - Flange Swivel 23
Nuts - Heavy Hex 25
Nuts - Heavy Hex Jam 25, 79
Nuts - Stainless Steel Flange 23
Nuts - Stainless Steel Spherical Flange 24
Nuts - Stainless Spherical Flange Assembly 24
Nuts - Street Plate 131
Nuts - T-Slot - English & Metric 21
Nuts -T-Slot - Quarter Turn 22
Nuts - T- Stainless Steel 21
Nuzzler Edge Clamps 30-31
Nuzzler Edge Clamp Accessories 33
Nuzzler Edge Clamp Kits 32
Pads - For Swivel Screw Clamps 45
Pads - Leveling 56-62
Pads - Leveling & Stud Assembly 56
Pads - Leveling Zinc Plated 56
Pads - Toggle 55, 78
Parallel Kits - AccuSnap 159
Parallel Kits - QuickChange 166
Parallel Sets - AccuSnap Individual 158
Parallel Sets - QuickChange Individual 165
Parallel System - Locator Jaw 189
Phenolic Revolving Handles 78
Pitbull Clamps 39, 93
Pivot Lifting Plates 128
Plain Clamps 35
Plain Clamps - Forged 37
Plain Clamps - Forged Tapped 37
Plain Fixture Keys 55
Plain Forged Eye Bolts 19
Plastic Ball Knobs 49
Plastic Clamp Kits 80
Plates - Fixture For Machine Tables 186
Plates - Fixture SnapLock 156
Plates - Aluminum Fixture 67
Plungers - Ball 88-90
Plungers - Ball Hexagon Socket 92
Plungers - Flat Hex Nose 96
Plungers - Hand Retractable Weldable 103
Plungers - Hex Nose 96
Plungers - Posi Hex 95
Plungers - Spring 91-100
Plungers - Spring - Delrin Knob Hand Retract .. 99
Plungers - Spring - Knurled Knob Hand Ret .. 100
Plungers - Spring - Lever Type 101-102
Plungers - Spring - Press Fit 94
Plungers - Spring - Short 97
Plungers - Spring - Standard 91-93
Plungers - Pull Ring Retractable 98
Plungers - Weldable 103
Plungers - Weldable Latch 103
Posi Hex Plungers 95
Positioner - Adjustable CMM 78
Precision Tooling Balls 84
Precision Shoulder Balls 83

Get quote
832-1274 • w
Angic Global Solutions 1-888-872-0690
https://www.AngicGlobal.com Sales@AngicGlobal.com

ALPHABETICAL INDEX

Premium Inspection Balls & Kits - Short....83
Pre-Set Buttons....54
Presetting Gage - AccuSnap....183
Press Fit Ball Plungers....90
Press Fit Spring Plungers....94
Pull Ring Retract. Spring Plungers....98
Punch Press Kits....2
Quarter Turn Screws....48
Quarter Turn T-Slot Nuts....22
QuickChange Individual Mill Angles....166
QuickChange Individual Parallel Sets....165
QuickChange Machinable Fixture Jaws....168
QuickChange Master Jaws....165
QuickChange Mill Angle Sets....167
QuickChange Parallel Kits....166
QuickChange Starter Packages....168
QuickStop....171
ReLock 2-Station Vise....146
ReLock 2-Station Vise/Hard Jaws....146
ReLock 2-Station Vise/Mach. Soft Jaws....146
ReLock Single Station Conversion Plates. 147,150
ReLock 8-Station Compact Quad....151
ReLock 8 Adapter Plate....150
ReLock 8-Station Vise....149
ReLock 8-Station Vise /Hard Jaws....149
ReLock 8-Station Vise/Mach.Soft Jaws....149
ReLock 8 Adapter Plate....150
ReLock 8 Support/Alignment Nose....150
Relock 8 Support Bracket....150
ReLock System Starter Packages....152
Rest Pads - Magnetic....76
Rest Pads - Straight Pin....74
Rests - Clamp....34
Rotary Cam. Op. Straight Index Plungers....52
Rotary Cam. Op. Taper Index Plungers....51
Round Base Swivel & Pivot Hoist Ring....129
Safety Engineered Hoist Rings....121-122
Safety Eng. Hoist Rings - Stainless Steel....122
Safety Engineered Hoist Ring Kits....123
Screw Jack Assembly - CMM....77
Screw Locking Inserts....59
Screws - Adjustment - Edge Clamp....33
Screws - Cap....79
Screws - Dog Point Hand Knob....47
Screws - Dog Point Knurled Head....47
Screws - Lock....47
Screws - Quarter Turn....47
Serrated End Clamps....36
Shaft Collars....34
Short Spring Plungers....97
Shoulder Forged Eye Bolts....19
Shoulder Tooling Balls....84
Side Load Hoist Rings....127
Side Pull - Tuff Forged™ Hoist Rings....126
Sine Fixture Keys....170
Single Station Compact Vise....148
Single Toe Clamp....8
SnapLock Carrier Jaws....156
SnapLock Fixture Plates....156
SnapLock Jaws For Single Station Appl.....155
SnapLock Jaws Full Coverage....155
SnapLock Machinable Fixture Jaws....154-155
Soft Clamps....36
Soft Jaws - Bolt-On Aluminum....169
Soft Touch Clamps....71
Spacers - AccuSnap....162
Spherical Flange Nuts....24
Spherical Flange Nut Assemblies....24
Spherical Washers....28-29
Spindle Assemblies-Toggle Clamp....118
Spring & Ball Plunger Wrenches....94
Spring Plungers....91-97
Spring Plungers - Delrin Knob Hand Retract....99
Spring Plungers - Hand Retractable....98-103
Spring Plungers - Knurled Knob Hand Retr. ..100
Spring Plungers - Lever Type....101-102
Spring Plungers - Short....97
Spring Plungers - Standard....91-93
Spring Stops....73, 104
Stainless Steel Ball Buttons....94
Stainless Steel Ball Plungers....88-90
Stainless Steel Driver Studs....8
Stainless Steel Flange Nuts....23
Stainless Steel Safety Engineered Hoist Rings. 122
Stainless Steel Spherical Flange Nut Asmbly....24
Stainless Steel Spherical Flange Nuts....24
Stainless Steel T-Bolts....16
Stainless Steel T-Nuts....21
Standard Hard Jaws....169
Standard Spring Plungers....91-93
Standard Tooling Balls....84
Standoffs - CMM....74
Steel Ball Plungers w/ Nylon Ball....88, 90
Step Blocks....5
Step Block Kits....6
Step Block & Clamp Kits....6
Step Clamps....37
Stops - Spring....104
Straight Index Plungers & Bushings....50, 52-53
Street Plate Lifting Rings....130
Street Plate Nut....131
Studs - Driver....8-12
Studs - Driver - Metric....12
Studs - Driver - Stainless Steel....8
Studs - Driver - Various Lengths....11
Super Clamp Kits....2
Super Forged Eyebolts....131
Support/Alignment Nose - ReLock 8....150
Support Bracket - Relock 8....150
Supports - Clamp....34
Swivel & Pivot Hoist Rings - Lg. Opening....150
Swivel & Pivot Hoist Rings - Round Base....150
Swivel Flange Nuts....23
Swivel Hoist Rings - Tuff Forged™....124
Swivel Joint Rest CMM....78
Swivel Screw Clamp Assemblies....45-46
Swivel Screw Clamp Bodies All Types....44
T-Bolts - Heavy Duty 4140 Steel....16
T-Bolts - Jig Bore....7
T-Bolts - Stainless Steel....16
T-Bolts - Tugger....17
T-Handle Wrenches - Edge Clamps....33
T-Nut & Stud Kits....3
T-Nuts - Quarter Turn T-Slot....22
T-Nuts - Stainless Steel....21
T-Slot Bolt Kits....15
T-Slot Bolt Kits - Tugger....15
T-Slot Bolt/Stud Kits....15
T-Slot Bolt/Stud Kits - Tugger....15
T-Slot Bolt Super Clamp Kit....15
T-Slot Bolts....13-15
T-Slot Bolts - Heavy Duty 4140....13
T-Slot Bolts - Tugger....14
T-Slot Cleaners....13
T-Slot Nuts....20-22
T-Slot Nuts - Metric....21
T-Slot Nuts - Quarter Turn....22
TalonGrip Clamps....41
Taper Index Plungers & Bushings....49, 51
Taper Nose Clamps....37
Tapped End Clamps....35
Tapped Hole Location Gages....82
Tapped Hole Location Gage Kits....82
Tapped Jig Feet....54
Toe Clamp - Single....8
Thin Wall Thread Inserts....58
Thin Wall Thread Inserts Reapair Kit....58
Thread Adapters - CMM....75
Threaded Inserts....58-59
Threaded Inserts - Thin Wall....58
Threaded Inserts - Thin Wall Repair Kit....58
Threaded Rod....8
Toggle Clamp Accessories....118
Toggle Clamps....108-118
Toggle Clamps - Horizontal Handle....111-112
Toggle Clamps - Vertical Handle....108-110
Toggle Clamps - Pull Action....116-118
Toggle Clamps - Straight Line Action....113-115
Toggle Pads....55, 78
Tooling Ball Cover....85
Tooling Balls - Shoulder....84
Tooling Balls - Standard....84
Towers - CMM Fixturing....68
Tuff Forged™ Side Pull Hoist Rings....126
Tuff Forged™ Swivel Hoist Rings....125
Tugger T-Slot Bolts....14
Tugger T-Slot Bolt Kits....15
Tugger T-Slot Bolt/Stud Kits....15
Tugger T-Slot Bolt Super Clamp Kit....15
"U" Clamps....8
"U" Clamps - Forged....38
Uniforce Clamp....40
Universal Workstop....171
VersaGrip Clamps....41
Vertical Cam Op. Straight Index Plungers....53
Vert. Cam Operated Taper Index Plungers....51
Vise Clamps....170
Vise Compact....148
Vise Fixture Keys....170, 182
Vise Mounting Kit....171
Vise Single Station 6"....182
Vise Single Station 8"....183
Washers - Clamp - Edge Clamp....33
Washers - Flat....26-27
Washers - Flat - Metric....26-27
Washers - Hardened Flat....26-27, 79
Washers - Heavy Duty Flat....26-27
Washers - Heavy Duty Flat - Metric....26-27
Washers - Spherical....28-29
Weldable Plungers....103
Weldable Plungers Latch....103
Wrench - T-Handle....33
Zinc Plated Leveling Pads....61

9 ANGIC Get quote 2-1274 • www Angic Global Solutions 1-888-872-0690 https://www.AngicGlobal.com Sales@AngicGlobal.com

PRODUCT INDEX

Product Code	Description	Page No
103	English Tapped Hole Location Gages & Kits	82
106	Premium Short Shank Inspection Ball Kit	83
106	Tooling Ball Cover	85
108	Precision Slip Fit Shoulder Ball	83
108	Slip Fit Shoulder Tooling Ball	84
109	Press Fit Shoulder Tooling Ball	84
110	Shoulder Construction Ball - Inch & Metric	85
110	Carbide Ball	85
111	Metric Tapped Hole Location Gages	82
112	Slip Fit Standard Tooling Ball	84
121	English CMM Clamp Kit	80-81
122	Metric CMM Clamp Kit	80-81
130	Thread Adapter	75
140	Adjustable Positioner	73
140	Standoffs	74
140	Delrin Cone	75
140	Pin Rest	74
140	Soft Touch Clamps	71
140	Swivel Joint Rest	78
141	CMM Clamping Components	72-73
141	CMM Magnetic Components	76
142	CMM Height Adjustment	77
142	CMM Adjustable Ball Positioner	78
142	Knurled Knob with Stud	79
143	CMM Aluminum Fixture Plate	67
143	CMM Fixturing Towers	68
143	CMM Basic Kit	69
143	CMM Comprehensive Kit	70
143	CMM Magnetic Component Pack	71
201	CNC Fixturing Kits	5
202	Super Clamp Kit - Steel Blocks	2
204	Machinists Clamp Kit	4
205	Milling Machine Clamp Kit	3
206	T-Nut & Stud Kit	3
207	Punch Press Kit	2
208	Step Block Kit - Inch & Metric	6
209	Basic Clamp Kit	5
210	Step Block & Clamp Kit with Steel Step Blocks	6
213	T-Slot Bolt Kits	15
214	Jig Bore Kit	5
215	Expanded Clamp Kit	4
238	Edge Clamp Kits	32
250	Fixture Plates	188
253	Columns - Four Sided	189
254	T-Columns	190
300	"U" Clamps	8
301	Center Clamp	34
304	Plain Clamps	35
305	Serrated End Clamp	36
307	Soft Clamps	36
308	Single Toe Clamps	8
308	Step Clamps	37
309	Tapped End Clamps/Taper Nose Clamps	35
310	Dog Point Hand Knob Screw	47
311-13	Swivel Screw Clamp Assemblies	45-46
311	Hand Knob Head Swivel Screw Clamp	44
312	Hex Socket Head Swivel Screw Clamp	44
313	Knurled Head Swivel Screw Clamp	44
315	Small Pad for Swivel Screw Clamp	45
316	Large Pad for Swivel Screw Clamp	45
338	Edge Clamps	30-31
338	Edge Clamp Accessories	33
339	Forged Plain Clamps	37
339	Forged Tapped Plain Clamps	37
339	Forged "U" Clamps	38
339	Forged Finger Tip Clamps	38
339	Forged Gooseneck Clamp	38
339	Forged Tapped Gooseneck Clamp	38
340	Toggle Clamp - Vert. Handle Hold Down Action	108-110
341	Toggle Clamp - Horiz. Handle Hold Down Action	111-112
343	Toggle Clamp - Straight Line Action	113-115
344	Toggle Clamp - Pull Action	116-118
345	Toggle Clamp - Accessories	118
350	Collet Stop Components	64
352	Pitbull Clamps	39
352	Knife Edge Clamps	40
352	ID Expansion Clamps	42
352	Compact Toe Clamps	43
352	Dyna Force Clamps	43
353	Machinable Fixture Clamps	39
353	Fixture Clamps	40
353	Machinable Uni-Force Clamps	42
354	TalonGrip Clamps	41
354	VersaGrip Clamps	41
401	Steel Step Blocks	7
402	Aluminum Heel Rest – Jig & Bore	7
403-09	Stainless Steel Driver Studs	8
403-11	Driver Studs	9-10
403-11	Driver Studs - Various Lengths	11
405	Stud-Jig Bore	7
414	T-Slot Nut	20-21
414	Quarter Turn T-Nut	22
415	Coupling (Extension) Nut	25
416	Flange Nut - UNC	22
417	Flange Nut - UNF	22
418	Spherical Flange Nut	24
418	Stainless Steel Spherical Flange Nut	24
419	Spherical Flange Nut Assemblies	24
419	Stainless Steel Spherical Flange Nut Assemblies	24
420	Swivel Flange Nut	23
421	Heavy Hex Nut	25
422	Heavy Hex Jam Nut	25
423	Thread Repair Inserts	58-63
424	Keylocking Inserts	60-61
425	Threaded Inserts	58-63
426	Flat Washers	26-27
426	Flat Washer Assortment	27
426	Heavy Duty Flat Washer	26
426	Heavy Duty Flat Washer Assortment	27
426	Stainless Steel Flat Washers	26
427	Spherical Washers - Steel	28
429	Eye Bolts	18
430	Latch (Swing) Bolts	18
431	Plain Forged Eye Bolt	19
432	Shoulder Forged Eye Bolt	19
433	Cast Aluminum Hand Knob	48
436	Plastic Ball Knob	48
438	Dog Point Knurled Head Screw	47
439	Quarter Turn Screw	48
440	Clamp Rest	34
441	Button Jig Feet	54

Get quote

832-1274 • w

Angic Global Solutions 1-888-872-0690
https://www.AngicGlobal.com Sales@AngicGlobal.com

PRODUCT INDEX

Product Code	Description	Page No
441	Tapped Jig Feet	54
443	Toggle Pad	55
444	Leveling Pad	56
444	Leveling Pad - Zinc Plated	56
444	Leveling Pad & Stud Assembly	56
445	Plain Fixture Key	55
445	Vise Fixture Keys	170
451	Hex Bolts	7
451	Threaded Rod	8
452-58	T-Slot Bolts	14
454-58	Heavy Duty T-Slot Bolts - 4140 Steel	13
462-66	T-Bolts	17
462-66	Heavy Duty T-Bolts - 4140 Steel	16
464-66	Stainless Steel T-Bolts	16
474	Stainless Steel T-Nuts	21
476	Stainless Steel Flange Nuts	23
477	Spherical Washers-Stainless	29
501	T-Slot Cleaner	13
502	Ball Bearing Parallel	57
508	Clamp Support	34, 79
509	Shaft Collars	34
520-23	Standard Spring Plungers	91
524-27	Short Spring Plungers	97
528	Standard Ball Plungers	88
529	Stainless Steel Ball Plungers	88
530	Spring & Ball Plunger Wrenches	94
531	Spring Stops	104
532-33	Stainless Steel Spring Plunger	91
536	Press Fit Plungers	90
536	Press Fit Ball Plungers - No Flange	90
537	Press Fit Ball Plungers	90
538	Steel & Stainless Steel Ball Plungers w/Nylon Ball	88
541	Weldable Plungers	103
542	Lever Type Hand Retract. Spring Plungers - Stainless	101
543	Lever Type Hand Retractable Spring Plungers	101-102
544	Pull Ring Hand Retractable Spring Plungers	98
545	Knurled Knob Hand Retract. Spring Plungers - Stainless	100
546	Knurled Knob Hand Retractable Spring Plungers	100
549	Index Plungers	49-53
550	Ball Plungers - Hexagon Socket - Steel Body	89
551	Ball Plungers - Hexagon Socket - Stainless Body	89
570	Posi-Hex Plungers	95
571	Posi-Hex Plungers - Delrin Nose	95
572	Hex Nose Plungers	96
574	Phenolic Nose Spring Plunger	91
575	Ball Buttons	94
583	Delrin Knob Hand Retractable Spring Plungers	99
584	Delrin Knob Hand Retractable Spring Plungers	99
602-608	Metric Driver Studs	12
602-608	Metric Studs - Various Length	11
614	Metric T-Slot Nuts	21
615	Metric Coupling (Extension) Nut	25
616	Metric Flange Nut	22
624	Metric Keylocking Inserts	61
630	Soft Touch Clamps - Metric	71
630	Adjustable Positioner - Metric	73
630	Standoffs - Metric	74
630	Pin Rest Pad - Metric	74
630	Delrin Cone - Metric	75
630	Screw Jack - Metric	77
630	Swivel Joint Rest - Metric	78
631	Toggle Clamp with Pad - Metric	72-73
631	Delrin Holder - Metric	75
631	Magnetic Components for CMM - Metric	76
632	Delrin Height Adjuster - Metric	77
632	Adjustable Ball Positioner - Metric	78
632	Jam Nut - Metric	79
632	Knurled Knob with Stud - Metric	79
633	CMM Aluminum Fixture Plate - Metric	67
633	CMM Fixturing Towers - Metric	68
633	CMM Basic Fixturing Kit - Metric	69
633	CMM Comprehensive Fixturing Kit - Metric	70
633	CMM Magnetic Component Pack - Metric	71
636	Metric Flat Washers	26
637	Metric Spring Plungers	93
639	Metric Ball Plungers	88
639	Metric Ball Plungers w/ Nylon Ball	88
640	Metric Stainless Steel Ball Plunger	88
642	Metric Lever Type Hand Retract. Spring Plungers - SS	101
643	Metric Lever Type Hand Retract. Spring Plungers	101
645	Metric Knurled Knob Hand Retract. Plungers - SS	100
646	Metric Knurled Knob Hand Retract. Spring Plungers	100
653	Metric Columns	189
654	Metric T-Columns	190
670	Metric Posi Hex Plungers	95
680	Metric Machinist Clamp Kit	4
681	Metric Super Clamp Kit	2
682	Metric T-Nut & Stud Kit	3
683	Metric Delrin Knob Hand Retract. Spring Plunger	99
684	Metric Delrin Knob Hand Retract. Spring Plunger - SS	99
690	Metric Ball Plungers - Steel Body	89
691	Metric Ball Plungers - Stainless Body	89
692	Metric Ball Plunger- Steel - Hexagon Socket	89
693	Metric Ball Plunger - Stainless - Hexagon Socket	89
694	Metric Spring Plunger - Steel - Slotted	92
695	Metric Spring Plunger - Stainless - Slotted	92
696	Metric Spring Plunger - Steel - Hexagon Socket	92
697	Metric Spring Plunger - Stainless - Hexagon Socket	93
698	Metric Spring Plunger - Stainless - Hexagon Socket	93
904	Vise Mounting Kit	171
AK382	Street Plate Lifting Rings	130
AK426	Large Opening Swivel & Pivot Hoist Rings	127
AK429	Large Opening Swivel & Pivot Hoist Rings - Metric	127
AK430	Alloy Steel Forged Rings	131
AK431	Alloy Steel Forged Rings	131
AK432	Alloy Steel Forged Rings	131
AK433	Alloy Steel Forged Rings	131
AK435	Side Load Hoist Rings	127
AK437	Lifting Rings	132
AK438	Alloy Steel Forged Rings	131
AK439	Lifting Ring - Metric	132
AK444	Pivot Lifting Plate	128
AK446	Pivot Lifting Plate	128
AK446	Round Base Swivel & Pivot Hoist Rings	129
AK447	Round Base Swivel & Pivot Hoist Rings	129
AK448	Round Base Swivel & Pivot Hoist Rings	129
AK460	Safety Engineered Hoist Rings	121
AK460	Bushing, Washer Screw Kit	124
AK461	Safety Engineered Hoist Rings	121
AK461	Bushing, Washer Screw Kit	124
AK462	Safety Engineered Hoist Rings	121
AK462	Bushing, Washer, Screw Kit	124
AK463	Safety Engineered Hoist Ring Kits	121
AK464	Safety Engineered Hoist Rings	121

Get quote
Angic Global Solutions 1-888-872-0690
https://www.AngicGlobal.com Sales@AngicGlobal.com

PRODUCT INDEX

Product Code	Description	Page No
AK464	Bushing, Washer Screw Kit	124
AK466	Safety Engineered Hoist Rings	121
AK466	Bushing, Washer Screw Kit	124
AK467	Safety Engineered Hoist Rings	121
AK468	Safety Engineered Hoist Rings	121
AK468	Bushing, Washer Screw Kit	124
AK469	Safety Engineered Hoist Rings - Metric	121
AK469	Safety Engineered Hoist Ring Kits	121
AK470	Safety Engineered Hoist Rings	121
AK470	Bushing, Washer Screw Kit	124
AK471	Safety Engineered Hoist Rings - Metric	121
AK472	Safety Engineered Hoist Rings	121
AK472	Bushing, Washer Screw Kit	124
AK474	Safety Engineered Hoist Rings	121
AK476	Safety Engineered Hoist Rings	121
AK486	Super Forged Eyebolt	131
AK488	Street Plate Nut	131
AK560	Tuff Forged Swivel Hoist Rings	125
AK561	Tuff Forged Swivel Hoist Rings	125
AK562	Tuff Forged Swivel Hoist Rings	125
AK564	Tuff Forged Swivel Hoist Rings	125
AK568	Tuff Forged Swivel Hoist Rings	125
AK569	Tuff Forged Swivel Hoist Rings - Metric	125
AK580	Stainless Steel Safety Engineered Hoist Rings	122
AK581	Stainless Steel Safety Engineered Hoist Rings	122
AK582	Stainless Steel Safety Engineered Hoist Rings	122
AK584	Stainless Steel Safety Engineered Hoist Rings	122
AK586	Stainless Steel Safety Engineered Hoist Rings	122
AK588	Stainless Steel Safety Engineered Hoist Rings	122
AK589	Stainless Steel Safety Engineered Hoist Rings	122
AK590	Stainless Steel Safety Engineered Hoist Rings	122
AK591	Stainless Steel Safety Eng. Hoist Rings - Metric	122
AK592	Stainless Steel Safety Engineered Hoist Rings	122
AK594	Stainless Steel Safety Engineered Hoist Rings	122
AK680	Forged Hoist Rings	126
AK681	Forged Hoist Rings	126
AK682	Tuff Forged Side Pull Hoist Rings	126
AK683	Tuff Forged Side Pull Hoist Rings	126

TOOLEX Vise Systems

AAP	AccuSnap Pkgs. for Competitor Dbl/Single Station Vises	161
ABP	AccuSnap Pkgs. for Competitor Single Station Vises	161
AIP	AccuSnap Individual Parallel Sets	158
AHR	AccuSnap Parallel Holders	163
AMA	AccuSnap Mill Angles & Kits	159-160
AMJ	AccuSnap Master Jaws	158
APS	AccuSnap Parallel Kits	159
ARK	AccuSnap Repair Kits	179
ASJ	AccuSnap Machinable Fixture Jaws	160
ATM	AccuSnap Pkgs. for Competitor Single Station Vises	161
AWS	Modular Workstops & Spacers	162
PWS	Single Station Vises	181-183
QAP	QuickChange Starter Packages - Advanced	168
QBP	QuickChange Starter Packages - Basic	168
QIP	QuickChange Individual Parallel Sets	165
QMA	QuickChange Mill Angles & Kits	166-167
QMJ	QuickChange Master Jaws	165
QPS	QuickChange Parallel Kits	166
QSJ	QuickChange Machinable Fixture Jaws	168
QTM	QuickChange Toolmaker Kits	168
QVS	QuickStop	171
RAP	Rotary Indexer Adapter Plate	150
RCP	Conversion Plates	147, 150
RSB	Rotary Indexer Support Bracket	150
RSN	Rotary Indexer Support Alignment Nose	150
RSP	ReLock System Starter Packages	152
RWS	Compact Quad	151
RWS	Compact Vise	148
RWS	Vises & Vise Packages	146-149
RWS	Accessories	169
RWS	Vise Clamps	170
SCJ	SnapLock Carrier Jaws	156
SFP	SnapLock Fixture Plates	156
SHJ	Standard Hard Jaws	169
SJB	Bolt-On Soft Jaws - Aluminum	169
SSJ	SnapLock Machinable Fixture Jaws	154-155
SSJ	SnapLock Machinable Jaws - Compact Vise	148
SSJ	SnapLock Machinable Jaws - Single Station	155
SSJ	SnapLock Machinable Jaws - Full Coverage	155
UWS	Universal Workstop	171

Get quote

832-1274 • w Angic Global Solutions 1-888-872-0690
https://www.AngicGlobal.com Sales@AngicGlobal.com

NOTES

Get quote
Angic Global Solutions 1-888-872-0690
https://www.AngicGlobal.com Sales@AngicGlobal.com

TOOLING COMPONENTS



Clamping Kits 2-5

Step Blocks & Kits 6-7

Driver Studs..... 8-12

Bolts, Screws 13-19

Nuts, Washers 20-29

Clamps 30-43

Swivel Screw Clamps..... 44-46

Screws.....47

Hand Knobs.....48

Index Plungers & Bushings..... 49-53

Jig Feet, Rest Buttons 54

Fixture Keys.....55

Leveling Pads and Mounts 55-56

Ball Bearing Parallels 57

Thread Repair Inserts..... 58-63

Collet Stops 64

Get quote

Angic Global Solutions 1-888-872-0690
https://www.AngicGlobal.com Sales@AngicGlobal.com

TOOLING COMPONENTS

Super Clamp Kits

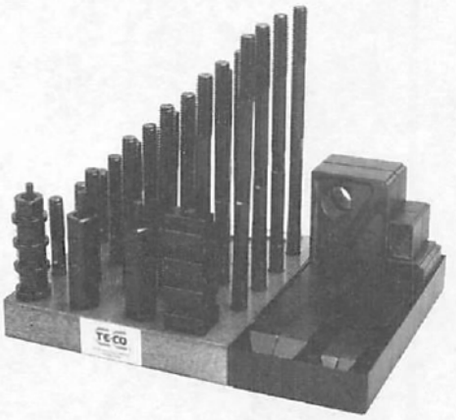

See individual components for material information.

Kit Contains:

- 6 Step Blocks
- 6 Serrated End Clamps
- 4 Coupling Nuts
- 4 Flange Nuts
- 4 T-Slot Nuts
- 1 T-Slot Cleaner
- 1 Holder (wooden base, metal tray)
- Bridgeport type milling machines use Part Nos. 20206, 20212, 20306 and 20312.

- 24 Studs – 4 each of:
  - **English Kits:** 3", 4", 5", 6", 7" and 8" long.
  - **Metric Kits:**
    Kit No. 68101: 80mm, 110mm, 125mm, 150mm, 175mm and 200mm long.
    Kit No. 68102-06 & 68110-12: 80mm, 110mm, 140mm, 150mm, 175mm and 200mm long.
    Kit No. 68107-08 & 68113-15: 80mm, 110mm, 150mm, 175mm, 200mm and 250mm long.

Metric Kits

Part No.	Table T-Slot Size	Stud Size	Weight (lbs/kit)
WITH 25MM THICK STEP BLOCKS			
68101	10MM	M8 x 1.25	18
68102	12MM	M10 x 1.5	18
68103	14MM	M10 x 1.5	18
68104	14MM	M12 x 1.75	23
68105	16MM	M12 x 1.75	23
68106	17MM	M12 x 1.75	24
68107	18MM	M16 x 2.0	28.3
68108	20MM	M16 x 2.0	28.3
WITH 38MM THICK STEP BLOCKS			
68110	14MM	M12 x 1.75	30
68111	16MM	M12 x 1.75	30
68112	17MM	M12 x 1.75	30
68113	18MM	M16 x 2.0	44.3
68114	20MM	M16 x 2.0	44.3
68115	22MM	M20 x 2.5	58

English Kits

Steel Step Block Part No.	Wt. (lbs/kit)	Table T-Slot Size	Stud Size
WITH 1" THICK STEP BLOCKS			
20201	18	3/8	5/16-18
20202	18	7/16	3/8-16
20203	18	1/2	3/8-16
20204	18	9/16	3/8-16
20205	23	9/16	1/2-13
20206	23	5/8	1/2-13
20207	24	11/16	1/2-13
20208	28.3	11/16	5/8-11
20209	28.3	3/4	5/8-11
20210	28.3	13/16	5/8-11
WITH 1-1/2" THICK STEP BLOCKS			
20211	30	9/16	1/2-13
20212	30	5/8	1/2-13
20213	30	11/16	1/2-13
20214	44.3	11/16	5/8-11
20215	44.3	3/4	5/8-11
20216	44.3	13/16	5/8-11
20217	58	13/16	3/4-10
20218	58	7/8	3/4-10
20219	58	1	3/4-10
20222	59	1-1/16	3/4-10
WITH 2" THICK STEP BLOCKS			
20220*	90	1	7/8-9
20221*	99	1-1/16	1-8

* Kits shipped in all wooden holders

English Kit is included in the Expanded Clamp Kit (Part Nos. 21502-21510 – see page 4)

View contents of kits at www.te-co.com

Punch Press Kits

See individual components for material information.

Kit Contains:

- 4 Coupling Nuts
- 8 Flange Nuts
- 4 Step Clamps
- 24 Studs - 4 each of 3", 4", 5", 6", 7" and 8" long.
- 1 Holder

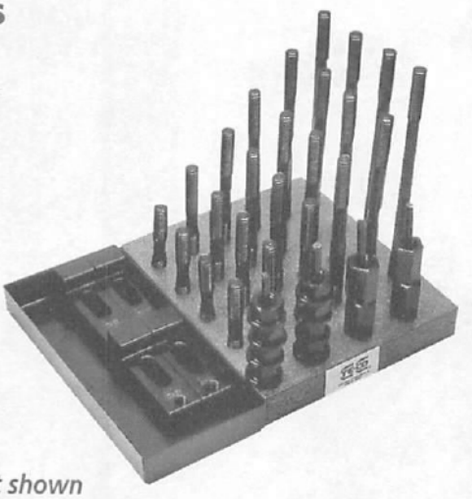

Punch Press Kit shown with clamps (optional).

With Clamps

Part No.	Stud Size	Clamps 4 Each	Weight (lbs/kit)
20701	3/8-16	30801	12
20702	1/2-13	30802	16
20703	5/8-11	30803	21
20704	3/4-10	30804	28

Without Clamps

Part No.	Stud Size	Weight (lbs/kit)
20710	3/8-16	9.5
20711	1/2-13	13
20712	5/8-11	17
20713	3/4-10	22.75
20715	7/8-9	30
20716	1-8	39

Get quote
Angic Global Solutions 1-888-872-0690
https://www.AngicGlobal.com Sales@AngicGlobal.com

T-Nut & Stud Kits

See individual components for material information.

Kit Contains:

- 4 Flange Nuts
- 4 Coupling Nuts
- 4 T-Slot Nuts
- 1 T-Slot Cleaner
- 24 Studs – 4 each of
  - **English Kits:** 3", 4", 5", 6", 7" and 8" long.
  - **Metric Kits:**
    Kit No. 68201-06: 80mm, 110mm, 140mm, 150mm, 175mm and 200mm long.
    Kit No. 58207-09: 80mm, 110mm, 150mm, 175mm, 200mm and 250mm long.
- 1 Holder (wooden base, metal tray)
- Bridgeport type milling machines use Part No. 20606.
- English Kit is included in the Milling Machine Clamp Kit (see below).



English Kits

Part No.	Table T-Slot Size	Stud Size	Weight (lbs/kit)
20601	3/8	5/16-18	8
20602	7/16	3/8-16	8
20603	1/2	3/8-16	8
20604	9/16	3/8-16	8
20605	9/16	1/2-13	12
20606	5/8	1/2-13	12
20607	11/16	1/2-13	13
20608	11/16	5/8-11	16.3
20609	3/4	5/8-11	16.3
20610	13/16	5/8-11	16.3
20611	13/16	3/4-10	24
20612	7/8	3/4-10	24
20613	1	3/4-10	24
20618	1-1/16	3/4-10	25
20614	1	7/8-9	30
20615	1-1/16	7/8-9	30
20616	1-1/8	7/8-9	30
20617	1-1/16	1-8	39

Metric Kits

Part No.	Table T-Slot Size	Stud Size	Weight (lbs/kit)
68201	10MM	M8 x 1.25	8
68202	12MM	M10 x 1.5	8
68203	14MM	M10 x 1.5	8
68204	14MM	M12 x 1.75	12
68205	16MM	M12 x 1.75	12
68206	17MM	M12 x 1.75	13
68207	18MM	M16 x 2.0	16.3
68208	20MM	M16 x 2.0	16.3
68209	22MM	M20 x 2.5	24

Versatility is expanded when used with Step Block & Clamp Kit (see page 6).



View contents of kits at www.te-co.com

Milling Machine Clamp Kits

See individual components for material information.

Kit Contains:

- 4 Soft Clamps – 6" long
- 4 Coupling Nuts
- 4 Flange Nuts
- 4 T-Slot Nuts
- 1 T-Slot Cleaner
- 24 Studs with flats – 4 each of 3", 4", 5", 6", 7" and 8" long
- 1 Holder (wooden base, metal tray)
- Bridgeport type milling machines use Part No. 20506

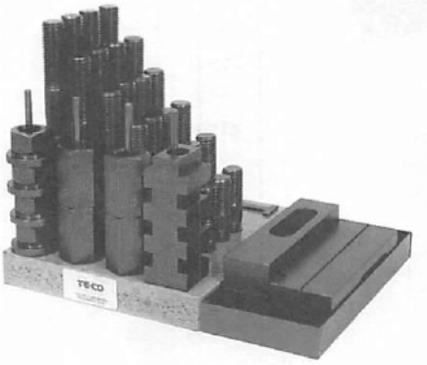

Part No.	Table T-Slot Size	Stud Size	Clamps 6" Long 4 Each	Weight (lbs/kit)
20501	3/8	5/16-18	30701	12
20502	7/16	3/8-16	30701	14
20503	1/2	3/8-16	30701	14
20504	9/16	3/8-16	30701	14
20505	9/16	1/2-13	30702	19
20506	5/8	1/2-13	30702	19
20507	11/16	1/2-13	30702	19
20508	11/16	5/8-11	30703	25
20509	3/4	5/8-11	30703	25
20510	13/16	5/8-11	30703	25
20511	13/16	3/4-10	30704	30
20512	7/8	3/4-10	30704	30
20513	1	3/4-10	30704	30

Versatility is expanded when used with Step Block Kit (see page 6).

ANGIC GLOBAL SOLUTIONS
Get quote
-832-1274 • w
Angic Global Solutions 1-888-872-0690
https://www.AngicGlobal.com Sales@AngicGlobal.com

Machinist Clamp Kits

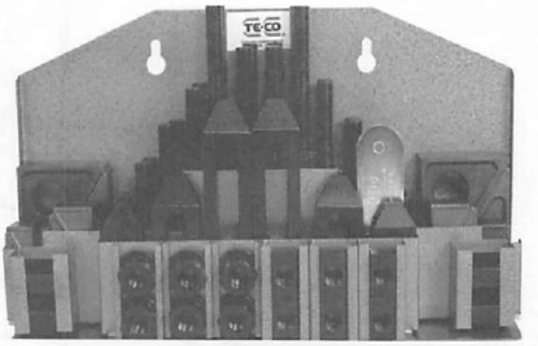

52-piece Kit Contains:

- 4 Coupling Nuts
- 6 Flange Nuts
- 6 T-Slot Nuts
- 1 T-Slot Cleaner
- 24 Studs – 4 each of:
  - **English Kits:** 3", 4", 5", 6", 7" and 8" long.
  - **Metric Kits:** 80mm, 110mm, 125mm, 150mm, 175mm and 200mm long.
- 6 Step Blocks
- 6 Serrated End Clamps
- 1 Holder
- Bridgeport type milling machines use Part No. 20402

See individual components for material information.

Metric Kits

Part No.	Wt. (lbs/kit)	Table T-Slot Size	Stud Size
WITH 25MM THICK STEP BLOCKS			
68001	18.5	12MM	M10 x 1.5
68002	18.5	14MM	M10 x 1.5
68003	24	14MM	M12 x 1.75
68004	24	16MM	M12 x 1.75
68005	24	17MM	M12 x 1.75
68006	29	18MM	M16 x 2.0
68007	29	20MM	M16 x 2.0

English Kits

Part No.	Wt. (lbs/kit)	Table T-Slot Size	Stud Size
WITH 1" THICK STEP BLOCKS			
20412	18.5	7/16	3/8-16
20413	18.5	1/2	3/8-16
20414	18.5	9/16	3/8-16
20401	24	9/16	1/2-13
20402*	24	5/8	1/2-13
20403	24	11/16	1/2-13
20404**	24	5/8	1/2-13
20415	29	11/16	5/8-11
20416	29	3/4	5/8-11
20417	29	13/16	5/8-11

*Comes with t-nut part #41410
**Comes with t-nut part #41411

View contents of kits at www.te-co.com

Expanded Clamp Kits

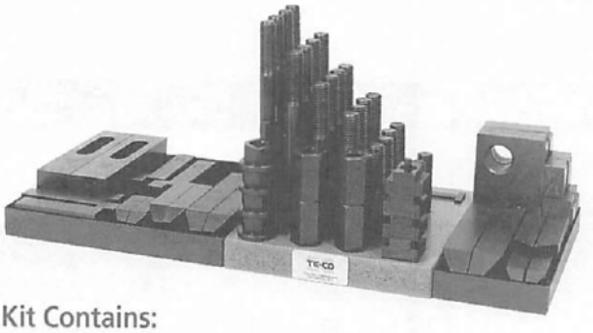

Kit Contains:

- 4 Soft Clamps
- 4 Step Clamps
- 6 Plain Clamps
- 4 Coupling Nuts
- 4 Flange Nuts
- 4 T-Slot Nuts
- 1 T-Slot Cleaner
- 6 Step Blocks
- 6 Serrated End Clamps
- 24 Studs with flats – 4 each of 3", 4", 5", 6", 7" and 8" long.
- 1 holder (wood base w/2 metal holders)

See individual components for material information.

Part No.	Table T-Slot Size	Stud Size	Soft Clamps 4 Each	Step Clamps 4 Each	Plain Clamps 2 each	Wt. (lbs/kit)
21502	7/16	3/8-16	30701	30801	30401 30402 30403	32
21503	1/2	3/8-16	30701	30801	30401 30402 30403	32
21504	9/16	3/8-16	30701	30801	30401 30402 30403	32
21505	9/16	1/2-13	30702	30802	30404 30405 30406	38
21506	5/8	1/2-13	30702	30802	30404 30405 30406	38
21507	11/16	1/2-13	30702	30802	30404 30405 30406	38
21508	11/16	5/8-11	30703	30803	30407 30408 30409	48
21509	3/4	5/8-11	30703	30803	30407 30408 30409	48
21510	13/16	5/8-11	30703	30803	30407 30408 30409	48

Get quote
Angic Global Solutions 1-888-872-0690
https://www.AngicGlobal.com Sales@AngicGlobal.com

Basic Clamp Kits

See individual components for material information.



Kit Contains:
- 14 Clamps
- Holder (metal tray)
- Versatility is expanded when used with the T-Nut & Stud Kit (see page 3)

Part No.	Serrated End Clamps 2 Each	Plain Clamps 2 Each	Step Clamps 2 Each	Stud Size	Wt. (lbs/kit)
20901	30501 30502 30503	30401 30402 30403	30801	3/8-16	11
20902	30504 30505 30506	30404 30405 30406	30802	1/2-13	13
20903	30507 30508 30509	30407 30408 30409	30803	5/8-11	15

CNC Fixturing Kits

- Clamping components can be one unit – no loose components in the machine.
- Available with taper nose clamps or tapped end clamp types.

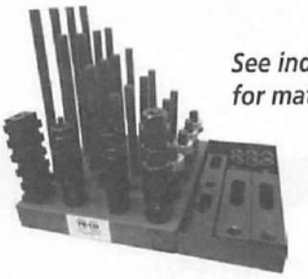

See individual components for material information.

Taper Nose Clamp Kit

Part Number	Table Slot Size	Stud Size
20130	9/16	1/2-13
20131	5/8	1/2-13
20132	11/16	1/2-13
20133	11/16	5/8-11
20134	3/4	5/8-11
20135	13.16	5/8-11
20136	13/16	3/4-10
20137	7/8	3/4-10
20138	1	3/4-10
20139	1-1/16	3/4-10

Kit Contains:
- 6 Taper Nose Clamps
- 6 T-nuts
- 6 Flange Nuts
- 6 Heavy Hex Jam Nuts
- 6 Toggle Pads
- 4 Coupling Nuts
- 4 Clamp Supports
- 1 Holder
- 24 Studs: 4 each of 3", 4", 5", 6", 7" & 8"

Tapped End Clamp Kit

Part Number	Table Slot Size	Stud Size
20120	9/16	1/2-13
20121	5/8	1/2-13
20122	11/16	1/2-13
20123	11/16	5/8-11
20124	3/4	5/8-11
20125	13.16	5/8-11
20126	13/16	3/4-10
20127	7/8	3/4-10
20128	1	3/4-10
20129	1-1/16	3/4-10

Kit Contains:
- 6 Tapped End Clamps
- 6 T-nuts
- 6 Flange Nuts
- 6 Heavy Hex Jam Nuts
- 6 Toggle Pads
- 4 Coupling Nuts
- 4 Clamp Supports
- 1 Holder
- 24 Studs: 4 each of 3", 4", 5", 6", 7" & 8"

Step Blocks



- Larger sizes have chamfered holes for ease of use
- Blocks work in conjunction with Serrated End clamps (see page 36)
- Two halves = One Block

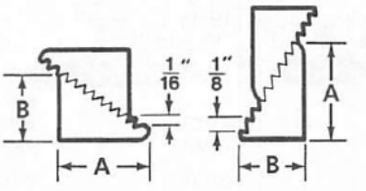

Metric

Steel Part No.	Wt. (lbs/100 pcs.)	Height Adj. Range	A	B
WITH 25MM THICK STEP BLOCKS				
40102M	21	19MM to 41MM	1-1/16	11/16
40103M	49	29MM to 64MM	1-39/64	1-1/16
40104M	203	64MM to 152MM	3-3/4	2-15/32
WITH 38MM THICK STEP BLOCKS				
40105M	174	45MM to 102MM	2-17/32	1-43/64
40106M	305	64MM to 152M	3-3/4	2-15/32
40107M	506	89MM to 229MM	5-21/64	3-7/16
WITH 51 MM THICK STEP BLOCKS				
40108M	230	45MM to 102MM	2-17/32	1-43/64
40109M	400	64MM to 152MM	3-3/4	2-15/32
40110M	670	89MM to 229MM	5-21/64	3-7/16

English

*Indicates chamfered holes

Steel Part No.	Wt. (lbs/100 pcs.)	Height Adj. Range	A	B
WITH 1" THICK STEP BLOCKS				
40102	21	3/4 to 1-5/8	1-1/16	11/16
40103	49	1-1/8 to 2-1/2	1-39/64	1-1/16
40104*	203	2-1/2 to 6	3-3/4	2-15/32
WITH 1-1/2" THICK STEP BLOCKS				
40105	174	1-3/4 to 4	2-17/32	1-43/64
40106*	305	2-1/2 to 6	3-3/4	2-15/32
40107*	506	3-1/2 to 9	5-21/64	3-7/16
WITH 2" THICK STEP BLOCKS				
40108	230	1-3/4 to 4	2-17/32	1-43/64
40109*	400	2-1/2 to 6	3-3/4	2-15/32
40110*	670	3-1/2 to 9	5-21/64	3-7/16
40111	2115	4-7/8 to 10-1/2	7-3/8	4-3/4

ANGIC GLOBAL SOLUTIONS
Get quote
-832-1274 • w
Angic Global Solutions 1-888-872-0690
https://www.AngicGlobal.com Sales@AngicGlobal.com

TOOLING COMPONENTS

Step Block Kits

Kit Contains:
- 10 Step Blocks
- 1 Holder
- Blocks work in conjunction with Serrated End Clamps (see page 36)
- Two halves = One Block

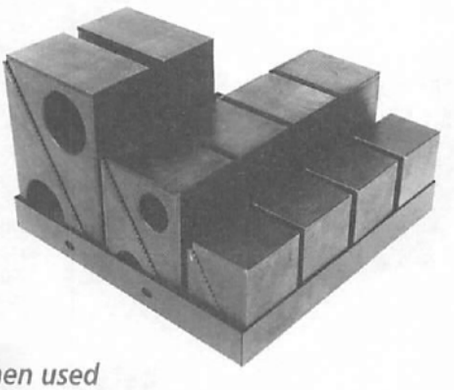

Versatility is expanded when used with the T-Nut & Stud Kit (see page 3).

English

Part No.	4 Each	4 Each	2 Each	Weight (lbs/kit)
20801	40102	40103	40104	8
20805	40105	40106	40107	33
20807	40108	40109	40110	40

Metric

Part No.	4 Each	4 Each	2 Each	Weight (lbs/kit)
20801M	40102M	40103M	40104M	8
20805M	40105M	40106M	40107M	33
20807M	40108M	40109M	40110M	40

View contents of kits at www.te-co.com

Step Block & Clamp Kits

See individual components for material information.

Kit Contains:
- 6 Step Blocks
- 6 Serrated End Clamps
- 1 Holder

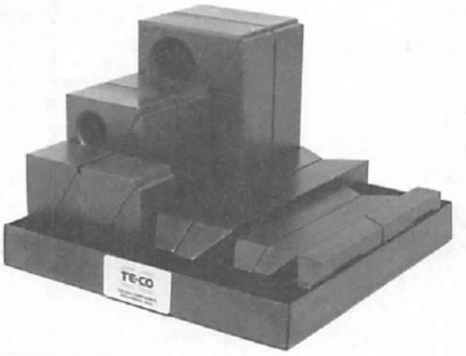

Versatility is expanded when used with the T-Nut & Stud Kit (Part No.'s 20601-17, 68202-09, see page 3).



English

Steel Step Block Part No.	Wt. (lbs/kit)	Step Blocks 2 Each	Stud Size	Serrated End Clamps 2 Each
WITH 1" THICK STEP BLOCKS				
21001	10	40102 40103 40104	5/16 or 3/8	30501 30502 30503
21002	11	40102 40103 40104	1/2	30504 30505 30506
21003	12	40102 40103 40104	5/8	30507 30508 30509
WITH 1-1/2" THICK STEP BLOCKS				
21004	27	40105 40106 40107	1/2	30504 30505 30506
21005	28	40105 40106 40107	5/8	30507 30508 30509
21006	34	40105 40106 40107	3/4	30510 30511 30512
WITH 2" THICK STEP BLOCKS				
***21007**	60	40108 40109 40110	7/8 or 1	30513 30514 30515

*Kits furnished with flatboard holder

Metric

Steel Step Block Part No.	Wt. (lbs/kit)	Step Blocks 2 Each	Stud Size	Serrated End Clamps 2 Each
WITH 25MM THICK STEP BLOCKS				
21001M	10	40102M 40103M 40104M	M10 x 1.5	30501M 30502M 30503M
21002M	11	40102M 40103M 40104M	M12 x 1.75	30504M 30505M 30506M
21003M	12	40102M 40103M 40104M	M16 x 2.0	30507M 30508M 30509M
WITH 38MM THICK STEP BLOCKS				
21004M	27	40105M 40106M 40107M	M12 x 1.75	30504M 30505M 30506M
21005M	28	40105M 40106M 40107M	M16 x 2.0	30507M 30508M 30509M
21006M	34	40105M 40106M 40107M	M20 x 2.5	30510M 30511M 30512M

93 ANGIC Get quote -1274 • www Angic Global Solutions 1-888-872-0690 https://www.AngicGlobal.com Sales@AngicGlobal.com

Jig Bore Kit

- For jig borers and jig grinders
- Will clamp anything within the range of the machine
- Aluminum heel rests prevent marring of the table top surface
- Hex bolts in clamps and coupling nuts allow adjustment of height within the range of the machine
- Clamps, t-bolts, studs, coupling nuts and flange nuts have a black oxide finish
- Includes holder (wooden base, metal tray)
- For detailed information on the aluminum heel rest and hex bolt, see page 7. For detailed clamp information, see page 8

See individual components for material information.

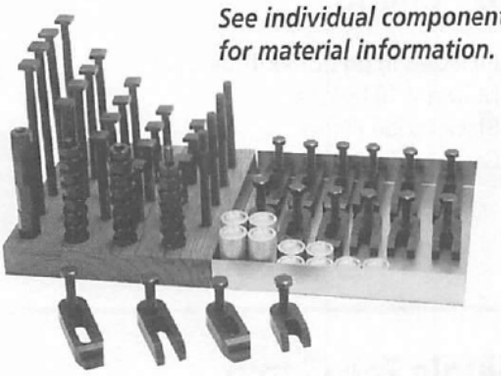

Part No.	Stud Size	Stud 4 Each	Coupling Nut 4 Each	"U" Clamp 4 Each	Single Toe Clamp 4 Each	Hex Bolt 4 Each	T-Bolt 4 Each	Flange Nut 20 Each	Heel Rest 4 Each
21401	3/8-16	40520	41503	30001 30002	30820 30821	45101	46215, 46216 46217, 46218 46219	41603	40215 40216 40217

Aluminum Heel Rest

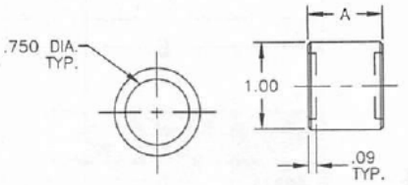



- Heel Rests prevent marring of the table top surface
- Material: Aluminum

Part No.	Stud Size
40215	0.375
40216	0.875
40217	1.875

Hex Bolt Part No. 45101

Black Oxide Finish



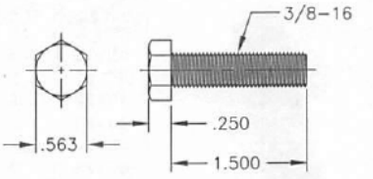

Stud Part No. 40520

- Thread Class 2A UNC
- Material: Medium Carbon Alloy Steel
- Black Oxide Finish, Heat Treated



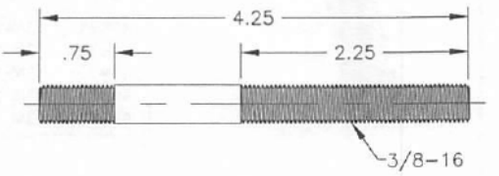

T-Bolt

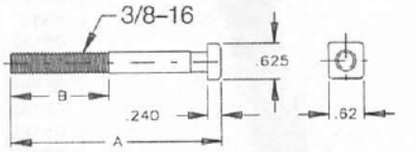



- Black Oxide Finish
- Material: 1045 Steel

Part No.	A	B
46215	1.88	1.00
46216	2.50	1.75
46217	3.50	1.75
46218	4.50	1.75
46219	6.00	1.75

ANGIC GLOBAL SOLUTIONS

Get quote

832-1274 • w

Angic Global Solutions 1-888-872-0690
https://www.AngicGlobal.com Sales@AngicGlobal.com

TOOLING COMPONENTS

"U" Clamp

- Included in jig bore kit (page 7)
- Material 1018 Steel
- Black Oxide Finish
- Case Hardened

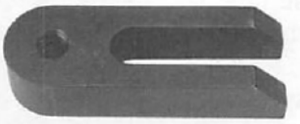

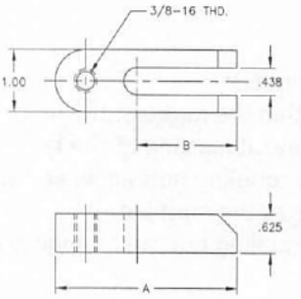

Part No.	A	B
30001	2.00	0.656
30002	3.00	1.656

Single Toe Clamp

- Included in jig bore kit (page 7)
- Material 1018 Steel
- Black Oxide Finish
- Case Hardened

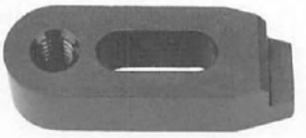

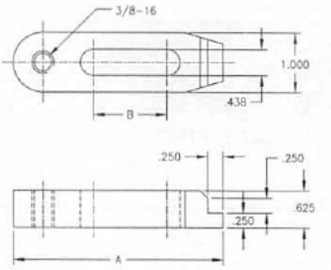

Part No.	A	B
30820	2.75	0.688
30821	3.50	1.438

Threaded Rod

- Black Oxide Finish
- Medium Carbon Steel (B7 Grade)

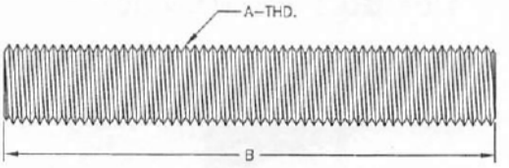



Part No.	A	B
45170	1/4-20	1 ft.
45171	5/16-18	1 ft.
45172	3/8-16	1 ft.
45173	1/2-13	1 ft.
45174	5/8-11	1 ft.
45175	3/4-10	1 ft.
45176	7/8-9	1 ft.
45177	1-8	1 ft.
45160	1/4-20	3 ft.
45161	5/16-18	3 ft.
45162	3/8-16	3 ft.
45163	1/2-13	3 ft.
45164	5/8-11	3 ft.
45165	3/4-10	3 ft.
45166	7/8-9	3 ft.
45167	1-8	3 ft.
45150	1/4-20	6 ft.
45151	5/16-18	6 ft.
45152	3/8-16	6 ft.
45153	1/2-13	6 ft.
45154	5/8-11	6 ft.
45155	3/4-10	6 ft.
45156	7/8-9	6 ft.
45157	1-8	6 ft.

Stainless Steel Driver Studs

- Material: 303 Series Stainless Steel
- Rolled Threads

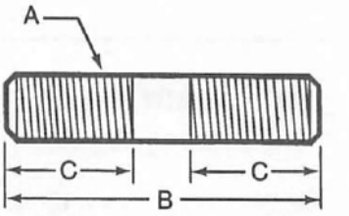



Part No.	Thread A	B	C
40374	1/4-20	3.00	1.00
40376	1/4-20	4.00	1.00
40378	1/4-20	5.00	1.00
40474	5/16-18	3.00	1.00
40476	5/16-18	4.00	1.13
40574	3/8-16	3.00	1.13
40576	3/8-16	4.00	1.25
40578	3/8-16	5.00	1.25
40580	3/8-16	6.00	1.25
40584	3/8-16	8.00	1.25
40785	1/2-13	4.00	1.50
40787	1/2-13	5.00	1.50
40789	1/2-13	6.00	1.50
40793	1/2-13	8.00	1.50
40876	5/8-11	4.00	1.75
40878	5/8-11	5.00	1.75
40880	5/8-11	6.00	1.75
40884	5/8-11	8.00	1.75
40971	3/4-10	3.00	1.25
40973	3/4-10	4.00	1.75
40977	3/4-10	6.00	2.00
40981	3/4-10	8.00	2.00
40983	3/4-10	10.00	2.00

Get quote
Angic Global Solutions 1-888-872-0690
https://www.AngicGlobal.com Sales@AngicGlobal.com

Driver Studs

- Black Oxide Finish
- Tensile Strength: 125,000 p.s.i. min
- Medium Carbon Steel
- Most studs have wrench flats
- Special lengths and sizes quoted upon request



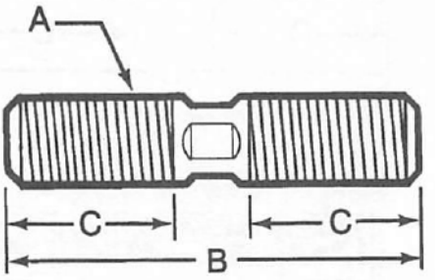

Part No.	Thread A	B	C	Flats	Weight (lbs/100pcs)
40301	1/4-20	1-1/2	1/2	NO	2
40302	1/4-20	2	3/4	NO	3
40303	1/4-20	2-1/2	1	NO	3
40304	1/4-20	3	1	NO	4
40305	1/4-20	3-1/2	1	NO	4
40306	1/4-20	4	1	NO	5
40307	1/4-20	4-1/2	1	NO	6
40308	1/4-20	5	1	NO	6
40309	1/4-20	5-1/2	1	NO	7
40310	1/4-20	6	1	NO	8
40311	1/4-20	6-1/2	1	NO	8
40312	1/4-20	7	1	NO	9
40313	1/4-20	7-1/2	1	NO	9
40314	1/4-20	8	1	NO	10
40401	5/16-18	1-1/2	1/2	NO	3
40402	5/16-18	2	3/4	NO	4
40403	5/16-18	2-1/2	1	NO	5
40404	5/16-18	3	1-1/8	NO	6
40405	5/16-18	3-1/2	1-1/8	NO	7
40406	5/16-18	4	1-1/8	NO	8
40407	5/16-18	4-1/2	1-1/8	NO	9
40408	5/16-18	5	1-1/8	NO	10
40409	5/16-18	5-1/2	1-1/8	NO	11
40410	5/16-18	6	1-1/8	NO	12
40411	5/16-18	6-1/2	1-1/8	NO	13
40412	5/16-18	7	1-1/8	NO	14
40413	5/16-18	7-1/2	1-1/8	NO	16
40414	5/16-18	8	1-1/8	NO	16
40501	3/8-16	1-1/2	1/2	NO	4
40502	3/8-16	2	3/4	NO	6
40503	3/8-16	2-1/2	1	NO	8
40504	3/8-16	3	1	YES	10
40505	3/8-16	3-1/2	1-1/4	YES	12
40506	3/8-16	4	1-1/4	YES	13
40507	3/8-16	4-1/2	1-1/4	YES	16
40508	3/8-16	5	1-1/4	YES	18
40509	3/8-16	5-1/2	1-1/4	YES	21
40510	3/8-16	6	1-1/4	YES	23
40511	3/8-16	6-1/2	1-1/4	YES	25
40512	3/8-16	7	1-1/4	YES	27
40513	3/8-16	7-1/2	1-1/4	YES	29
40514	3/8-16	8	1-1/4	YES	31

Part No.	Thread A	B	C	Flats	Weight (lbs/100pcs)
40601	7/16-14	1-1/2	1/2	NO	5
40602	7/16-14	2	3/4	NO	8
40603	7/16-14	2-1/2	1	NO	10
40604	7/16-14	3	1	YES	13
40605	7/16-14	3-1/2	1-1/4	YES	15
40606	7/16-14	4	1-3/8	YES	18
40607	7/16-14	4-1/2	1-3/8	YES	20
40608	7/16-14	5	1-3/8	YES	23
40609	7/16-14	5-1/2	1-3/8	YES	25
40610	7/16-14	6	1-3/8	YES	28
40611	7/16-14	6-1/2	1-3/8	YES	30
40612	7/16-14	7	1-3/8	YES	33
40613	7/16-14	7-1/2	1-3/8	YES	35
40614	7/16-14	8	1-3/8	YES	38
40701	1/2-13	1-1/2	1/2	NO	7
40702	1/2-13	2	3/4	NO	9
40703	1/2-13	2-1/2	1	NO	12
40704	1/2-13	3	1	YES	14
40705	1/2-13	3-1/2	1-1/4	YES	17
40706	1/2-13	4	1-1/2	YES	19
40707	1/2-13	4-1/2	1-1/2	YES	22
40708	1/2-13	5	1-1/2	YES	24
40709	1/2-13	5-1/2	1-1/2	YES	27
40710	1/2-13	6	1-1/2	YES	29
40711	1/2-13	6-1/2	1-1/2	YES	32
40712	1/2-13	7	1-1/2	YES	34
40713	1/2-13	7-1/2	1-1/2	YES	37
40714	1/2-13	8	1-1/2	YES	39
40715	1/2-13	9	1-1/2	YES	44
40716	1/2-13	10	1-1/2	YES	49
40717	1/2-13	12	1-1/2	YES	59
40718	1/2-13	14	1-1/2	YES	69
40719	1/2-13	16	1-1/2	YES	79
40801	5/8-11	1-1/2	1/2	NO	12
40802	5/8-11	2	3/4	NO	16
40803	5/8-11	2-1/2	1	NO	19
40804	5/8-11	3	1	YES	23
40805	5/8-11	3-1/2	1-1/4	YES	27
40806	5/8-11	4	1-1/2	YES	31
40807	5/8-11	4-1/2	1-3/4	YES	34
40808	5/8-11	5	1-3/4	YES	38
40809	5/8-11	5-1/2	1-3/4	YES	42
40810	5/8-11	6	1-3/4	YES	46
40811	5/8-11	6-1/2	1-3/4	YES	49
40812	5/8-11	7	1-3/4	YES	53
40813	5/8-11	7-1/2	1-3/4	YES	57
40814	5/8-11	8	1-3/4	YES	61
40815	5/8-11	9	1-3/4	YES	68
40816	5/8-11	10	1-3/4	YES	76
40817	5/8-11	12	1-3/4	YES	91
40818	5/8-11	14	1-3/4	YES	106
40819	5/8-11	16	1-3/4	YES	121
40820	5/8-11	18	1-3/4	YES	136
40821	5/8-11	20	1-3/4	YES	161
40822	5/8-11	22	1-3/4	YES	176
40823	5/8-11	24	1-3/4	YES	201

(Driver Studs continued on page10)

ANGIC GLOBAL SOLUTIONS

Get quote

332-1274 • ww

Angic Global Solutions 1-888-872-0690
https://www.AngicGlobal.com Sales@AngicGlobal.com

Driver Studs (continued)



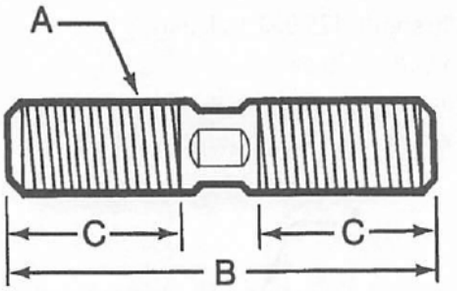

Part No.	Thread A	B	C	Flats	Weight (lbs/100pcs)
40901	3/4-10	3	1	YES	32
40902	3/4-10	3-1/2	1-1/4	YES	38
40903	3/4-10	4	1-1/2	YES	43
40904	3/4-10	4-1/2	1-3/4	YES	49
40905	3/4-10	5	2	YES	54
40906	3/4-10	5-1/2	2	YES	60
40907	3/4-10	6	2	YES	66
40908	3/4-10	6-1/2	2	YES	71
40909	3/4-10	7	2	YES	77
40910	3/4-10	7-1/2	2	YES	83
40911	3/4-10	8	2	YES	88
40912	3/4-10	9	2	YES	99
40913	3/4-10	10	2	YES	111
40914	3/4-10	12	2	YES	133
40915	3/4-10	14	2	YES	156
40916	3/4-10	16	2	YES	178
40917	3/4-10	18	2	YES	201
40918	3/4-10	20	2	YES	223
40919	3/4-10	22	2	YES	246
40920	3/4-10	24	2	YES	268
41001	7/8-9	3	1	YES	43
41002	7/8-9	3-1/2	1-1/4	YES	49
41003	7/8-9	4	1-1/2	YES	56
41004	7/8-9	4-1/2	1-3/4	YES	62
41005	7/8-9	5	2	YES	78
41006	7/8-9	5-1/2	2-1/4	YES	84
41007	7/8-9	6	2-1/4	YES	88
41008	7/8-9	6-1/2	2-1/4	YES	97
41009	7/8-9	7	2-1/4	YES	103
41010	7/8-9	7-1/2	2-1/4	YES	109
41011	7/8-9	8	2-1/4	YES	116
41012	7/8-9	9	2-1/4	YES	128
41013	7/8-9	10	2-1/4	YES	141
41014	7/8-9	12	2-1/4	YES	166
41015	7/8-9	14	2-1/4	YES	191
41016	7/8-9	16	2-1/4	YES	216
41017	7/8-9	18	2-1/4	YES	241
41018	7/8-9	20	2-1/4	YES	266
41019	7/8-9	22	2-1/4	YES	291
41020	7/8-9	24	2-1/4	YES	316

Part No.	Thread A	B	C	Flats	Weight (lbs/100pcs)
41101	1-8	3	1	YES	58
41102	1-8	3-1/2	1-1/4	YES	67
41103	1-8	4	1-1/2	YES	76
41104	1-8	4-1/2	1-3/4	YES	86
41105	1-8	5	2	YES	95
41106	1-8	5-1/2	2-1/4	YES	104
41107	1-8	6	2-1/2	YES	114
41108	1-8	6-1/2	2-1/2	YES	123
41109	1-8	7	2-1/2	YES	133
41110	1-8	7-1/2	2-1/2	YES	142
41111	1-8	8	2-1/2	YES	151
41112	1-8	9	2-1/2	YES	170
41113	1-8	10	2-1/2	YES	189
41114	1-8	12	2-1/2	YES	226
41115	1-8	14	2-1/2	YES	264
41116	1-8	16	2-1/2	YES	301
41117	1-8	18	2-1/2	YES	339
41118	1-8	20	2-1/2	YES	376
41119	1-8	22	2-1/2	YES	414
41120	1-8	24	2-1/2	YES	451

May Be Used With:

- T-Nuts, see pgs. 20-22
- Flange Nuts, see pgs. 22-24
- Flat Washers, see pgs. 26-27
- Spherical Washers, see pgs. 28-29

Get quote
2-1274 • www
Angic Global Solutions 1-888-872-0690
https://www.AngicGlobal.com Sales@AngicGlobal.com

Driver Studs – Various Thread Lengths

- Black Oxide Finish
- Medium Carbon Steel
- Special lengths & sizes quoted upon request
- Metric studs dimensioned in millimeters



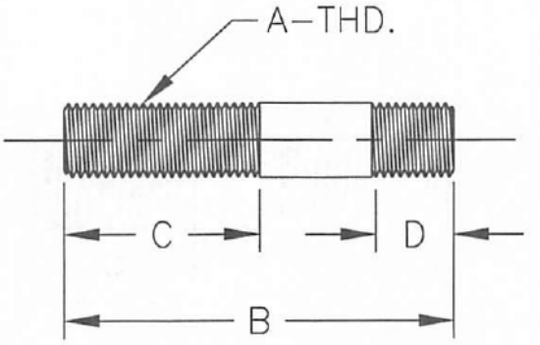

Metric

Part No.	Thread A	B	C	D
60251	M6 x 1.0	50	20	12
60252	M6 x 1.0	65	20	12
60253	M6 x 1.0	80	27	12
60254	M6 x 1.0	95	27	12
60255	M6 x 1.0	110	31	12
60351	M8 x 1.25	50	20	12
60352	M8 x 1.25	65	20	12
60353	M8 x 1.25	80	27	12
60354	M8 x 1.25	95	31	12
60355	M8 x 1.25	110	31	12
60356	M8 x 1.25	140	35	12
60451	M10 x 1.5	50	20	16
60452	M10 x 1.5	65	20	16
60453	M10 x 1.5	80	27	16
60454	M10 x 1.5	95	31	16
60455	M10 x 1.5	110	35	16
60456	M10 x 1.5	140	35	16
60551	M12 x 1.75	50	20	16
60552	M12 x 1.75	65	20	16
60553	M12 x 1.75	80	27	16
60554	M12 x 1.75	95	31	16
60555	M12 x 1.75	110	39	16
60556	M12 x 1.75	140	39	16
60557	M12 x 1.75	175	39	16
60558	M12 x 1.75	200	39	16
60651	M16 x 2.0	80	21	18
60652	M16 x 2.0	110	47	18
60653	M16 x 2.0	150	47	18
60654	M16 x 2.0	175	47	18
60655	M16 x 2.0	200	47	18
60656	M16 x 2.0	250	47	18
60751	M20 x 2.5	80	27	20
60752	M20 x 2.5	110	47	20
60753	M20 x 2.5	150	55	20
60754	M20 x 2.5	175	55	20
60755	M20 x 2.5	200	55	20
60851	M24 x 3.0	160	100	35
60852	M24 x 3.0	300	100	35

English

Part No.	Thread A	B	C	D
40350	1/4-20	1.50	0.88	0.38
40351	1/4-20	2.00	1.00	0.38
40352	1/4-20	2.50	1.00	0.38
40353	1/4-20	3.00	1.50	0.38
40354	1/4-20	4.00	1.75	0.38
40355	1/4-20	5.00	1.75	0.38
40356	1/4-20	6.00	2.00	0.38
40357	1/4-20	7.00	2.00	0.38
40358	1/4-20	8.00	2.50	0.38
40450	5/16-18	1.50	0.75	0.50
40451	5/16-18	2.00	1.00	0.50
40452	5/16-18	2.50	1.00	0.50
40453	5/16-18	3.00	1.50	0.50
40454	5/16-18	4.00	1.50	0.50
40455	5/16-18	5.00	1.75	0.50
40456	5/16-18	6.00	2.00	0.50
40457	5/16-18	7.00	2.00	0.50
40458	5/16-18	8.00	2.50	0.50
40550	3/8-16	1.50	0.63	0.63
40551	3/8-16	2.00	1.00	0.63
40552	3/8-16	3.00	1.50	0.63
40553	3/8-16	4.00	1.50	0.63
40554	3/8-16	5.00	1.75	0.63
40555	3/8-16	6.00	2.00	0.63
40556	3/8-16	8.00	2.50	0.63
40770	1/2-13	1.50	0.63	0.63
40771	1/2-13	2.00	1.00	0.63
40772	1/2-13	3.00	1.50	0.75
40773	1/2-13	4.00	1.50	0.75
40774	1/2-13	5.00	1.75	0.75
40775	1/2-13	5.50	1.75	0.75
40776	1/2-13	6.00	2.00	0.75
40777	1/2-13	6.50	2.00	0.75
40778	1/2-13	7.00	2.00	0.75
40779	1/2-13	8.00	2.50	0.75
40780	1/2-13	9.00	2.50	0.75
40781	1/2-13	10.00	3.00	0.75
40782	1/2-13	12.00	3.00	0.75

Part No.	Thread A	B	C	D
40850	5/8-11	2.00	1.00	0.63
40851	5/8-11	2.50	1.00	0.88
40852	5/8-11	3.00	1.50	0.88
40853	5/8-11	4.00	1.75	0.88
40854	5/8-11	5.00	1.75	0.88
40855	5/8-11	5.50	2.00	0.88
40856	5/8-11	6.00	2.00	0.88
40857	5/8-11	6.50	2.00	0.88
40858	5/8-11	7.00	2.00	0.88
40859	5/8-11	8.00	2.50	0.88
40860	5/8-11	9.00	2.50	0.88
40861	5/8-11	10.00	2.50	0.88
40862	5/8-11	12.00	3.00	0.88
40863	5/8-11	14.00	3.00	0.88
40950	3/4-10	3.00	1.50	1.00
40951	3/4-10	4.00	1.75	1.00
40952	3/4-10	5.00	1.75	1.00
40953	3/4-10	6.00	2.00	1.00
40954	3/4-10	7.00	2.00	1.00
40955	3/4-10	8.00	2.50	1.00
40956	3/4-10	9.00	2.50	1.00
40957	3/4-10	10.00	2.50	1.00
40958	3/4-10	12.00	3.00	1.00
40959	3/4-10	14.00	3.00	1.00
41050	7/8-9	3.00	1.00	1.25
41051	7/8-9	4.00	1.75	1.25
41052	7/8-9	5.00	1.75	1.25
41053	7/8-9	6.00	2.00	1.25
41054	7/8-9	7.00	2.50	1.25
41055	7/8-9	8.00	3.00	1.25
41056	7/8-9	9.00	3.00	1.25
41057	7/8-9	10.00	3.00	1.25
41058	7/8-9	12.00	3.00	1.25
41150	1-8	4.00	1.75	1.50
41151	1-8	5.00	1.75	1.50
41152	1-8	6.00	2.00	1.50
41153	1-8	8.00	2.50	1.50
41154	1-8	12.00	3.00	1.50

ANGIC GLOBAL SOLUTIONS
Get quote
332-1274 • ww
Angic Global Solutions 1-888-872-0690
https://www.AngicGlobal.com Sales@AngicGlobal.com

TOOLING COMPONENTS

Metric Studs

- Black Oxide Finish
- Tensile Strength: 125,000 p.s.i. min.
- Medium Carbon Steel
- Dimension in millimeters.
- Special lengths and sizes quoted upon request



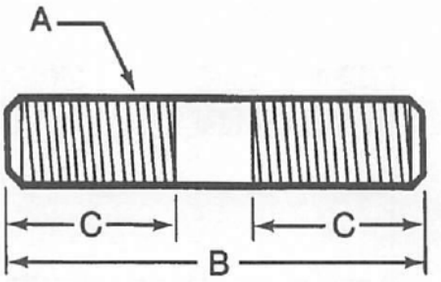

Part No.	Thread A	B	C	Weight (lbs/100pcs)
60201	M6 x 1.0	50	20	2
60202	M6 x 1.0	65	20	2.7
60203	M6 x 1.0	80	27	3
60204	M6 x 1.0	95	27	4
60206	M6 x 1.0	110	31	5
60208	M6 x 1.0	140	35	6
60210	M6 x 1.0	150	35	7
60211	M6 x 1.0	175	35	8
60213	M6 x 1.0	200	35	9
60301	M8 x 1.25	50	20	4
60302	M8 x 1.25	65	20	5
60303	M8 x 1.25	80	27	6
60304	M8 x 1.25	95	31	8
60306	M8 x 1.25	110	31	9
60308	M8 x 1.25	140	35	11
60310	M8 x 1.25	150	35	12
60311	M8 x 1.25	175	35	13
60313	M8 x 1.25	200	35	16
60401	M10 x 1.5	50	20	6
60402	M10 x 1.5	65	20	8
60403	M10 x 1.5	80	27	9
60404	M10 x 1.5	95	31	11
60406	M10 x 1.5	110	35	13
60407	M10 x 1.5	125	35	15
60408	M10 x 1.5	140	35	17
60410	M10 x 1.5	150	35	19
60411	M10 x 1.5	175	35	21
60413	M10 x 1.5	200	35	24
60501	M12 x 1.75	50	20	8
60502	M12 x 1.75	65	20	11
60503	M12 x 1.75	80	27	13
60504	M12 x 1.75	95	31	15

Part No.	Thread A	B	C	Weight (lbs/100pcs)
60506	M12 x 1.75	110	39	18
60507	M12 x 1.75	125	39	21
60508	M12 x 1.75	140	39	24
60510	M12 x 1.75	150	39	26
60511	M12 x 1.75	175	39	30
60513	M12 x 1.75	200	39	35
60603	M16 x 2.0	80	21	24
60604	M16 x 2.0	95	31	29
60606	M16 x 2.0	110	47	33
60607	M16 x 2.0	125	47	38
60609	M16 x 2.0	150	47	48
60611	M16 x 2.0	175	47	55
60613	M16 x 2.0	200	47	63
60615	M16 x 2.0	250	47	80
60616	M16 x 2.0	300	47	96
60703	M20 x 2.5	80	27	38
60704	M20 x 2.5	95	31	45
60706	M20 x 2.5	110	47	51
60707	M20 x 2.5	125	55	58
60709	M20 x 2.5	150	55	72
60711	M20 x 2.5	175	55	84
60713	M20 x 2.5	200	55	97
60715	M20 x 2.5	250	55	124
60716	M20 x 2.5	300	55	148
60805	M24 x 3.0	100	39	69
60807	M24 x 3.0	125	55	82
60809	M24 x 3.0	150	63	100
60811	M24x 3.0	175	63	120
60813	M24x 3.0	200	63	137
60815	M24 x 3.0	250	63	175
60816	M24 x 3.0	300	63	213

Get quote
Angic Global Solutions 1-888-872-0690
https://www.AngicGlobal.com Sales@AngicGlobal.com

Heavy Duty T-Slot Bolts – 4140 Steel

- Black Oxide Finish
- 4140 Steel
- T-Slot Bolt head is undersized to fit machine table slot
- Thread Class 2A UNC
- Special lengths and sizes quoted upon request



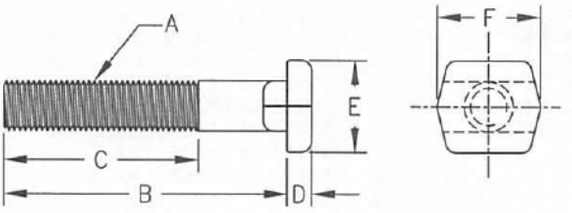

Part No.	Thread A	B	C	D	E	F	Table Slot	Weight (lbs/100pcs)
45458	1/2-13	1-1/4	3/4	5/16	7/8	1-1/4	1/2	15
45459	1/2-13	1-1/2	1	5/16	7/8	1-1/4	1/2	15
45469	1/2-13	1-3/4	1	5/16	7/8	1-1/4	1/2	16
45460	1/2-13	2	1	5/16	7/8	1-1/4	1/2	17
45470	1/2-13	2-1/4	1	5/16	7/8	1-1/4	1/2	18
45461	1/2-13	2-1/2	1-1/4	5/16	7/8	1-1/4	1/2	19
45462	1/2-13	3	1-1/2	5/16	7/8	1-1/4	1/2	22
45463	1/2-13	3-1/2	1-1/2	5/16	7/8	1-1/4	1/2	23.5
45464	1/2-13	4	1-1/2	5/16	7/8	1-1/4	1/2	26.5
45471	1/2-13	4-1/2	2	5/16	7/8	1-1/4	1/2	30
45465	1/2-13	5	2	5/16	7/8	1-1/4	1/2	32
45466	1/2-13	6	2	5/16	7/8	1-1/4	1/2	39
45467	1/2-13	8	2	5/16	7/8	1-1/4	1/2	48
45468	1/2-13	9	2	5/16	7/8	1-1/4	1/2	54
45560	5/8-11	2	1-1/4	3/8	1-1/8	1-1/2	5/8	29
45569	5/8-11	2-1/4	1-1/4	3/8	1-1/8	1-1/2	5/8	31
45561	5/8-11	2-1/2	1-1/4	3/8	1-1/8	1-1/2	5/8	33
45570	5/8-11	2-3/4	1-1/2	3/8	1-1/8	1-1/2	5/8	35
45562	5/8-11	3	1-1/2	3/8	1-1/8	1-1/2	5/8	37
45563	5/8-11	3-1/2	1-1/2	3/8	1-1/8	1-1/2	5/8	42
45564	5/8-11	4	1-1/2	3/8	1-1/8	1-1/2	5/8	45
45571	5/8-11	4-1/2	1-1/2	3/8	1-1/8	1-1/2	5/8	50
45565	5/8-11	5	1-1/2	3/8	1-1/8	1-1/2	5/8	53
45566	5/8-11	6	1-1/2	3/8	1-1/8	1-1/2	5/8	61
45572	5/8-11	7	3	3/8	1-1/8	1-1/2	5/8	70
45567	5/8-11	8	3	3/8	1-1/8	1-1/2	5/8	75
45568	5/8-11	10	3	3/8	1-1/8	1-1/2	5/8	96
45573	5/8-11	12	3	3/8	1-1/8	1-1/2	5/8	114
45659	3/4-10	2-1/2	1-1/2	7/16	1-5/16	1-3/4	3/4	56
45660	3/4-10	3	1-1/2	7/16	1-5/16	1-3/4	3/4	58
45661	3/4-10	3-1/2	1-1/2	7/16	1-5/16	1-3/4	3/4	64
45662	3/4-10	4	1-1/2	7/16	1-5/16	1-3/4	3/4	69
45668	3/4-10	4-1/2	1-1/2	7/16	1-5/16	1-3/4	3/4	76
45663	3/4-10	5	1-1/2	7/16	1-5/16	1-3/4	3/4	81
45669	3/4-10	5-1/2	1-1/2	7/16	1-5/16	1-3/4	3/4	90
45664	3/4-10	6	1-1/2	7/16	1-5/16	1-3/4	3/4	117
45665	3/4-10	8	1-1/2	7/16	1-5/16	1-3/4	3/4	93
45666	3/4-10	10	3	7/16	1-5/16	1-3/4	3/4	143
45667	3/4-10	12	3	7/16	1-5/16	1-3/4	3/4	166
45670	3/4-10	7	3	7/16	1-5/16	1-3/4	3/4	107
45760	7/8-9	4	2	9/16	1-1/2	1-3/4	7/8	99
45761	7/8-9	5	2	9/16	1-1/2	1-3/4	7/8	115
45762	7/8-9	6	2	9/16	1-1/2	1-3/4	7/8	132
45763	7/8-9	7	2	9/16	1-1/2	1-3/4	7/8	149
45764	7/8-9	8	2	9/16	1-1/2	1-3/4	7/8	166
45858	1-8	3-1/2	2-1/2	1/2	1-11/16	2-1/4	1	135
45866	1-8	4-1/2	2-1/2	1/2	1-11/16	2-1/4	1	160
45859	1-8	4	2-1/2	1/2	1-11/16	2-1/4	1	150
45860	1-8	5	2-1/2	1/2	1-11/16	2-1/4	1	165
45861	1-8	6	2-1/2	1/2	1-11/16	2-1/4	1	188
45862	1-8	8	3	1/2	1-11/16	2-1/4	1	231
45863	1-8	7	3	1/2	1-11/16	2-1/4	1	210
45864	1-8	10	3	1/2	1-11/16	2-1/4	1	274
45865	1-8	12	3	1/2	1-11/16	2-1/4	1	319

T-Slot Cleaner Part No. 50101

- This 1" wide t-slot cleaner allows for easy removal of chips from the machine table
- Made of steel for durability
- Weight per 100 pcs. = 11.3 lbs.

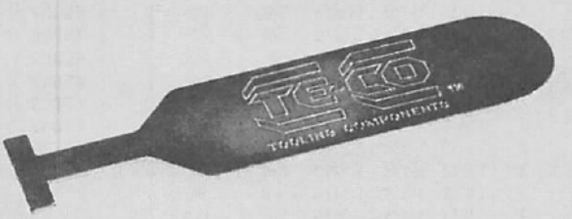

ANGIC GLOBAL SOLUTIONS
Get quote
332-1274 • ww
Angic Global Solutions 1-888-872-0690
https://www.AngicGlobal.com Sales@AngicGlobal.com

Tugger® T-Slot Bolts

- Black Oxide Finish
- Medium Carbon Steel
- T-Slot Bolt head is undersized to fit machine table slot
- Thread Class 2A UNC
- Special lengths and sizes quoted upon request



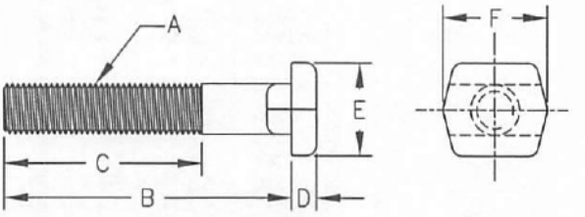

Part No.	Thread A	B	C	D	E	F	Table Slot	Weight (lbs/100pcs)
45203	3/8-16	1-1/2	1	3/16	11/16	13/16	3/8	7
45205	3/8-16	2	1-1/2	3/16	11/16	13/16	3/8	8
45207	3/8-16	2-1/2	2	3/16	11/16	13/16	3/8	10
45209	3/8-16	3	2	3/16	11/16	13/16	3/8	11
45210	3/8-16	3-1/2	2	3/16	11/16	13/16	3/8	12.5
45211	3/8-16	4	2	3/16	11/16	13/16	3/8	14
45212	3/8-16	4-1/2	2	3/16	11/16	13/16	3/8	15
45213	3/8-16	5	2	3/16	11/16	13/16	3/8	17.5
45214	3/8-16	5-1/2	2	3/16	11/16	13/16	3/8	19
45215	3/8-16	6	2	3/16	11/16	13/16	3/8	20
45216	3/8-16	7	2	3/16	11/16	13/16	3/8	23
45217	3/8-16	8	2	3/16	11/16	13/16	3/8	26
45402	1/2-13	1-1/2	1	1/4	7/8	1-3/16	1/2	14
45404	1/2-13	2	1-1/2	1/4	7/8	1-3/16	1/2	17
45406	1/2-13	2-1/2	2	1/4	7/8	1-3/16	1/2	19
45408	1/2-13	3	2	1/4	7/8	1-3/16	1/2	22
45409	1/2-13	3-1/2	2	1/4	7/8	1-3/16	1/2	23.5
45410	1/2-13	4	2	1/4	7/8	1-3/16	1/2	26.5
45411	1/2-13	4-1/2	2	1/4	7/8	1-3/16	1/2	29
45412	1/2-13	5	2	1/4	7/8	1-3/16	1/2	32
45413	1/2-13	5-1/2	2	1/4	7/8	1-3/16	1/2	35
45414	1/2-13	6	2	1/4	7/8	1-3/16	1/2	39
45415	1/2-13	7	2	1/4	7/8	1-3/16	1/2	40
45416	1/2-13	8	2	1/4	7/8	1-3/16	1/2	48
45417	1/2-13	9	2	1/4	7/8	1-3/16	1/2	54
45418	1/2-13	10	2	1/4	7/8	1-3/16	1/2	59
45419	1/2-13	12	2	1/4	7/8	1-3/16	1/2	71
45501	5/8-11	1-1/2	1	11/32	1-1/8	1-5/16	5/8	25
45502	5/8-11	2	1-1/2	11/32	1-1/8	1-5/16	5/8	29
45504	5/8-11	2-1/2	2	11/32	1-1/8	1-5/16	5/8	33
45506	5/8-11	3	2	11/32	1-1/8	1-5/16	5/8	37
45507	5/8-11	3-1/2	2	11/32	1-1/8	1-5/16	5/8	42
45508	5/8-11	4	2	11/32	1-1/8	1-5/16	5/8	45
45509	5/8-11	4-1/2	2	11/32	1-1/8	1-5/16	5/8	49
45510	5/8-11	5	2	11/32	1-1/8	1-5/16	5/8	53
45511	5/8-11	5-1/2	2	11/32	1-1/8	1-5/16	5/8	57
45512	5/8-11	6	2	11/32	1-1/8	1-5/16	5/8	61
45513	5/8-11	7	2	11/32	1-1/8	1-5/16	5/8	69
45514	5/8-11	8	2	11/32	1-1/8	1-5/16	5/8	75
45515	5/8-11	9	2	11/32	1-1/8	1-5/16	5/8	88
45516	5/8-11	10	2	11/32	1-1/8	1-5/16	5/8	96
45517	5/8-11	12	2	11/32	1-1/8	1-5/16	5/8	114

Part No.	Thread A	B	C	D	E	F	Table Slot	Weight (lbs/100pcs)
45601	3/4-10	2	1-1/2	15/32	1-1/4	1-9/16	3/4	46
45602	3/4-10	2-1/2	2	15/32	1-1/4	1-9/16	3/4	52
45603	3/4-10	3	2	15/32	1-1/4	1-9/16	3/4	58
45604	3/4-10	3-1/2	2	15/32	1-1/4	1-9/16	3/4	64
45605	3/4-10	4	2	15/32	1-1/4	1-9/16	3/4	69
45606	3/4-10	4-1/2	2	15/32	1-1/4	1-9/16	3/4	74
45607	3/4-10	5	2	15/32	1-1/4	1-9/16	3/4	81
45608	3/4-10	5-1/2	2	15/32	1-1/4	1-9/16	3/4	86
45609	3/4-10	6	2	15/32	1-1/4	1-9/16	3/4	93
45610	3/4-10	7	2	15/32	1-1/4	1-9/16	3/4	105
45611	3/4-10	8	2	15/32	1-1/4	1-9/16	3/4	117
45612	3/4-10	9	2	15/32	1-1/4	1-9/16	3/4	129
45613	3/4-10	10	2	15/32	1-1/4	1-9/16	3/4	143
45614	3/4-10	12	2	15/32	1-1/4	1-9/16	3/4	166
45701	7/8-9	3	2	9/16	1-1/2	1-3/4	7/8	84
45702	7/8-9	4	2	9/16	1-1/2	1-3/4	7/8	99
45703	7/8-9	5	2	9/16	1-1/2	1-3/4	7/8	115
45704	7/8-9	6	2	9/16	1-1/2	1-3/4	7/8	132
45705	7/8-9	7	2	9/16	1-1/2	1-3/4	7/8	149
45706	7/8-9	8	2	9/16	1-1/2	1-3/4	7/8	166
45707	7/8-9	9	2	9/16	1-1/2	1-3/4	7/8	184
45708	7/8-9	10	2	9/16	1-1/2	1-3/4	7/8	199
45709	7/8-9	12	2	9/16	1-1/2	1-3/4	7/8	232
45710	7/8-9	14	2	9/16	1-1/2	1-3/4	7/8	265
45711	7/8-9	16	2	9/16	1-1/2	1-3/4	7/8	300
45712	7/8-9	18	2	9/16	1-1/2	1-3/4	7/8	332
45801	1-8	3	2	11/16	1-3/4	2-1/16	1	123
45802	1-8	4	2	11/16	1-3/4	2-1/16	1	144
45803	1-8	5	2	11/16	1-3/4	2-1/16	1	165
45804	1-8	6	2	11/16	1-3/4	2-1/16	1	188
45805	1-8	7	2	11/16	1-3/4	2-1/16	1	210
45806	1-8	8	2	11/16	1-3/4	2-1/16	1	231
45807	1-8	9	2	11/16	1-3/4	2-1/16	1	252
45808	1-8	10	2	11/16	1-3/4	2-1/16	1	274
45809	1-8	12	2	11/16	1-3/4	2-1/16	1	319
45810	1-8	14	2	11/16	1-3/4	2-1/16	1	360
45811	1-8	16	2	11/16	1-3/4	2-1/16	1	404
45812	1-8	18	2	11/16	1-3/4	2-1/16	1	453

Get quote
Angic Global Solutions 1-888-872-0690
https://www.AngicGlobal.com Sales@AngicGlobal.com

Tugger® T-Slot Bolt Super Clamp Kit

Kit Contains:

- 24 T-Slot Bolts
  - Short Series: 4 each of 1-1/2", 2", 2-1/2", 3", 3-1/2" and 4" long
  - Long Series: 4 each of 3", 4", 5", 6", 7" and 8" long
- 8 Flange Nuts
- 6 Step Blocks
- 6 Serrated End Clamps
- 1 T-Slot Cleaner
- 1 Holder (wooden base/metal tray)

See individual components for material information.



Part No.	T-Slot Size	Bolt Length	Thread Size
WITH 1" THICK STEP BLOCKS			
21350	3/8	Short	3/8-16
21351	3/8	Long	3/8-16
21352	1/2	Short	1/2-13
21353	1/2	Long	1/2-13
21354	5/8	Short	5/8-11
21355	5/8	Long	5/8-11
WITH 1-1/2" THICK STEP BLOCKS			
21356	1/2	Short	1/2-13
21357	1/2	Long	1/2-13
21358	5/8	Short	5/8-11
21359	5/8	Long	5/8-11
21360	3/4	Long	3/4-10

Tugger® T-Slot Bolt Kits

See individual components for material information.

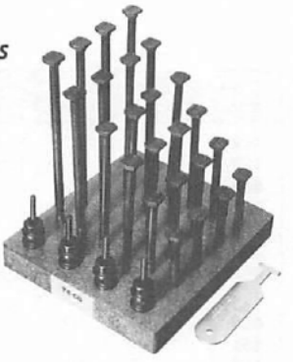

Kit Contains:

- 24 T-Slot Bolts:
  - Short Series: 4 each of 1-1/2", 2", 2-1/2", 3", 3-1/2" and 4 long
  - Long Series: 4 each of 3", 4", 5", 6" 7" and 8" long
- 8 Flange Nuts
- 1 T-Slot Cleaner
- 1 Holder

Part No.	Thread Size	Table Slot	Bolt Series	4 Each O.A.L.
21330	3/8-16	3/8	Short	1-1/2 thru 4
21332	1/2-13	1/2	Short	1-1/2 thru 4
21334	5/8-11	5/8	Short	1-1/2 thru 4
21331	3/8-16	3/8	Long	3 thru 8
21333	1/2-13	1/2	Long	3 thru 8
21335	5/8-11	5/8	Long	3 thru 8
21336	3/4-10	3/4	Long	3 thru 8

Tugger® T-Slot Bolt /Stud Kits

See individual components for material information.

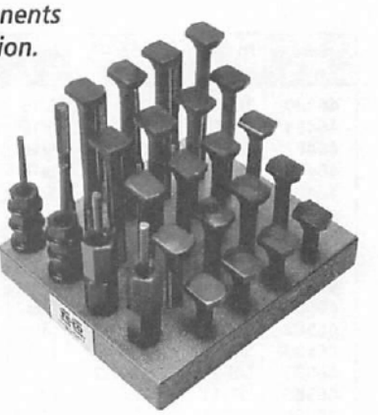

Kit Contains:

- 20 T-Slot Bolts
- 4 Studs
- 6 Flange Nuts
- 4 Coupling Nuts
- 1 T-Slot Cleaner
- 1 Holder

Part No.	Thread Size	Table Slot	Set Incl. 4 Ea T-Slot Bolts	Stud Length
21340	3/8-16	3/8	1-1/2", 2", 2-1/2", 3",4"	4
21341	1/2-13	1/2	2", 3", 4", 5", 6"	5
21342	5/8-11	5/8	3", 4", 5", 6", 8"	6
21343	3/4-10	3/4	3", 4", 5", 6", 8"	7
21344	1-8	1	4", 5", 6", 8", 10"	8

ANGIC GLOBAL SOLUTIONS
Get quote
32-1274 • ww
Angic Global Solutions 1-888-872-0690
https://www.AngicGlobal.com Sales@AngicGlobal.com

Stainless Steel T-Bolts

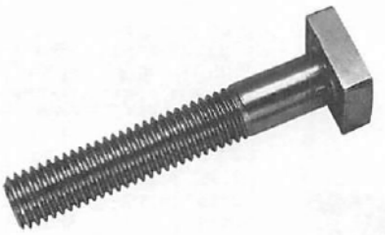

- Material: 304 Stainless Steel
- Special lengths and sizes quoted upon request

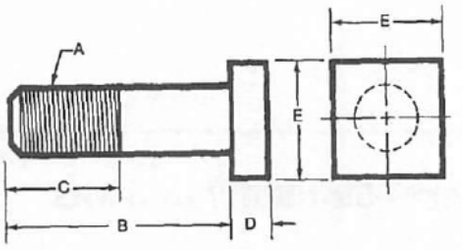

Part No.	Thread A	B	C	D	E	Table Slot	Weight (lbs/100pcs)
46480	1/2-13	1-1/2	1	5/16	7/8	1/2	15
46481	1/2-13	2	1-1/2	5/16	7/8	1/2	17
46482	1/2-13	2-1/2	2	5/16	7/8	1/2	19
46483	1/2-13	3	2	5/16	7/8	1/2	22
46484	1/2-13	4	2	5/16	7/8	1/2	28
46485	1/2-13	5	2	5/16	7/8	1/2	33
46486	1/2-13	6	2	5/16	7/8	1/2	39
46487	1/2-13	8	2	5/16	7/8	1/2	50
46580	5/8-11	2	1-1/2	13/32	1-1/8	5/8	30
46581	5/8-11	2-1/2	2	13/32	1-1/8	5/8	33
46582	5/8-11	3	2	13/32	1-1/8	5/8	38
46583	5/8-11	4	2	13/32	1-1/8	5/8	46
46584	5/8-11	5	2	13/32	1-1/8	5/8	55
46585	5/8-11	6	2	13/32	1-1/8	5/8	63
46586	5/8-11	8	2	13/32	1-1/8	5/8	82
46680	3/4-10	2-1/2	1-3/4	17/32	1-5/16	3/4	56
46681	3/4-10	3	2	17/32	1-5/16	3/4	59
46682	3/4-10	3-1/2	2	17/32	1-5/16	3/4	66
46683	3/4-10	4	2	17/32	1-5/16	3/4	68
46684	3/4-10	5	2	17/32	1-5/16	3/4	81
46685	3/4-10	6	2-1/2	17/32	1-5/16	3/4	96
46686	3/4-10	8	2-1/2	17/32	1-5/16	3/4	120

Heavy Duty 4140 Steel T-Bolts



- Black Oxide Finish
- 4140 Steel
- Thread Class 2A UNC
- Special lengths and sizes quoted upon request

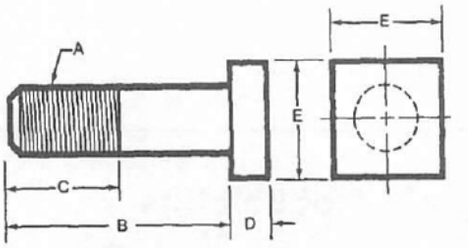

Part No.	Thread A	B	C	D	E	Table Slot	Weight (lbs/100pcs)
46260	3/8-16	1-1/2	1	1/4	11/16	3/8	7
46261	3/8-16	2	1-1/2	1/4	11/16	3/8	9
46262	3/8-16	2-1/2	2	1/4	11/16	3/8	11
46263	3/8-16	3	2	1/4	11/16	3/8	12
46264	3/8-16	3-1/2	2	1/4	11/16	3/8	13
46265	3/8-16	4	2	1/4	11/16	3/8	15
46266	3/8-16	5	2	1/4	11/16	3/8	18
46267	3/8-16	6	2	1/4	11/16	3/8	21
46460	1/2-13	1-1/2	1	5/16	7/8	1/2	14
46461	1/2-13	2	1-1/2	5/16	7/8	1/2	17
46462	1/2-13	2-1/2	2	5/16	7/8	1/2	18
46463	1/2-13	3	2	5/16	7/8	1/2	21
46464	1/2-13	3-1/2	2	5/16	7/8	1/2	24
46465	1/2-13	4	2	5/16	7/8	1/2	27
46466	1/2-13	5	2	5/16	7/8	1/2	32
46467	1/2-13	6	2	5/16	7/8	1/2	38
46468	1/2-13	7	2	5/16	7/8	1/2	43
46469	1/2-13	8	2	5/16	7/8	1/2	49
46560	5/8-11	2	1-1/2	13/32	1-1/8	5/8	29
46561	5/8-11	2-1/2	2	13/32	1-1/8	5/8	32
46562	5/8-11	3	2	13/32	1-1/8	5/8	37
46563	5/8-11	3-1/2	2	13/32	1-1/8	5/8	42
46564	5/8-11	4	2	13/32	1-1/8	5/8	45
46565	5/8-11	5	2	13/32	1-1/8	5/8	54
46566	5/8-11	6	2	13/32	1-1/8	5/8	62
46567	5/8-11	7	2	13/32	1-1/8	5/8	72
46568	5/8-11	8	2	13/32	1-1/8	5/8	81
46569	5/8-11	10	2	13/32	1-1/8	5/8	96
46660	3/4-10	3	2	17/32	1-5/16	3/4	58
46661	3/4-10	3-1/2	2	17/32	1-5/16	3/4	65
46662	3/4-10	4	2	17/32	1-5/16	3/4	67
46663	3/4-10	5	2	17/32	1-5/16	3/4	80
46664	3/4-10	6	2	17/32	1-5/16	3/4	94
46665	3/4-10	7	2	17/32	1-5/16	3/4	106
46666	3/4-10	8	2	17/32	1-5/16	3/4	118
46667	3/4-10	10	2	17/32	1-5/16	3/4	144

ANGIC
Get quote
32-1274 • ww
Angic Global Solutions 1-888-872-0690
https://www.AngicGlobal.com Sales@AngicGlobal.com

Tugger® T-Bolts

- Black Oxide Finish
- Medium Carbon Steel
- Heat Treated
- Thread Class 2A UNC
- Special lengths and sizes quoted upon request



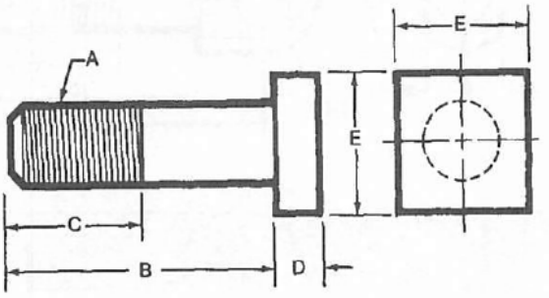

Part No.	Thread A	B	C	D	E	Table Slot	Weight (lbs/100pcs)
46201	3/8-16	1-1/2	1	1/4	11/16	3/8	7
46202	3/8-16	2	1-1/2	1/4	11/16	3/8	9
46203	3/8-16	2-1/2	2	1/4	11/16	3/8	11
46204	3/8-16	3	2	1/4	11/16	3/8	12
46205	3/8-16	3-1/2	2	1/4	11/16	3/8	13
46206	3/8-16	4	2	1/4	11/16	3/8	15
46207	3/8-16	5	2	1/4	11/16	3/8	18
46208	3/8-16	6	2	1/4	11/16	3/8	21
46209	3/8-16	7	2	1/4	11/16	3/8	25
46210	3/8-16	8	2	1/4	11/16	3/8	27
46401	1/2-13	1-1/2	1	5/16	7/8	1/2	14
46402	1/2-13	2	1-1/2	5/16	7/8	1/2	17
46403	1/2-13	2-1/2	2	5/16	7/8	1/2	18
46404	1/2-13	3	2	5/16	7/8	1/2	21
46405	1/2-13	3-1/2	2	5/16	7/8	1/2	24
46406	1/2-13	4	2	5/16	7/8	1/2	27
46413	1/2-13	4-1/2	2	5/16	7/8	1/2	30
46407	1/2-13	5	2	5/16	7/8	1/2	32
46414	1/2-13	5-1/2	2	5/16	7/8	1/2	35
46408	1/2-13	6	2	5/16	7/8	1/2	38
46409	1/2-13	7	2	5/16	7/8	1/2	43
46410	1/2-13	8	2	5/16	7/8	1/2	49
46411	1/2-13	10	2	5/16	7/8	1/2	59
46412	1/2-13	12	2	5/16	7/8	1/2	70
46501	5/8-11	1-1/2	1	13/32	1-1/8	5/8	25
46502	5/8-11	2	1-1/2	13/32	1-1/8	5/8	29
46503	5/8-11	2-1/2	2	13/32	1-1/8	5/8	32
46504	5/8-11	3	2	13/32	1-1/8	5/8	37
46505	5/8-11	3-1/2	2	13/32	1-1/8	5/8	42
46506	5/8-11	4	2	13/32	1-1/8	5/8	45
46513	5/8-11	4-1/2	2	13/32	1-1/8	5/8	50
46507	5/8-11	5	2	13/32	1-1/8	5/8	54
46514	5/8-11	5-1/2	2	13/32	1-1/8	5/8	59
46508	5/8-11	6	2	13/32	1-1/8	5/8	62
46509	5/8-11	7	2	13/32	1-1/8	5/8	72
46510	5/8-11	8	2	13/32	1-1/8	5/8	81
46511	5/8-11	10	2	13/32	1-1/8	5/8	96
46512	5/8-11	12	2	13/32	1-1/8	5/8	115
46600	3/4-10	2-1/2	2	17/32	1-5/16	3/4	56
46601	3/4-10	3	2	17/32	1-5/16	3/4	58
46602	3/4-10	3-1/2	2	17/32	1-5/16	3/4	65
46603	3/4-10	4	2	17/32	1-5/16	3/4	67
46610	3/4-10	4-1/2	2	17/32	1-5/16	3/4	73
46604	3/4-10	5	2	17/32	1-5/16	3/4	80
46611	3/4-10	5-1/2	2	17/32	1-5/16	3/4	90
46605	3/4-10	6	2	17/32	1-5/16	3/4	94
46606	3/4-10	7	2	17/32	1-5/16	3/4	106
46607	3/4-10	8	2	17/32	1-5/16	3/4	118
46608	3/4-10	10	2	17/32	1-5/16	3/4	144
46609	3/4-10	12	2	17/32	1-5/16	3/4	168

ANGIC GLOBAL SOLUTIONS

Get quote

32-1274 • ww

Angic Global Solutions 1-888-872-0690
https://www.AngicGlobal.com Sales@AngicGlobal.com

Eye Bolts

- Black Oxide Finish
- ASTM A311 Material
- Thread Class 2A UNC
- Special sizes quoted upon request
- Many sizes conform to TCMAI standards



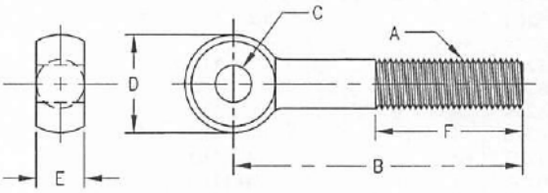

Metric sizes manufactured upon request

Part No.	Thread A	B	+.002 -.000 C	D	+.000 -.005 E	F	Weight (lbs/100pcs)
42930	1/4-20	2	3/16	1/2	1/4	3/4	3.2
42931	1/4-20	3	3/16	1/2	1/4	1-1/4	4.3
42935	5/16-18	3	1/4	5/8	5/16	1-1/2	6.9
42936	5/16-18	3	5/16	5/8	5/16	1-1/2	6.8
42937	5/16-18	4	1/4	5/8	5/16	2	8.9
42938	5/16-18	4	5/16	5/8	5/16	2	8.6
42940	3/8-16	3	5/16	3/4	3/8	1-1/2	10.6
42941	3/8-16	3	3/8	3/4	3/8	1-1/2	10.3
42942	3/8-16	3-3/4	3/8	3/4	3/8	2	12
42943	3/8-16	5	3/8	3/4	3/8	2-1/2	16
42945	1/2-13	3-3/4	3/8	1	1/2	1-1/2	25
42946	1/2-13	5	3/8	1	1/2	2	31
42950	5/8-11	4-1/2	5/8	1-1/4	5/8	2	44
42951	5/8-11	6	5/8	1-1/4	5/8	2-1/2	56
42955	3/4-10	4-1/2	3/4	1-1/2	3/4	2	65
42956	3/4-10	6	3/4	1-1/2	3/4	2-1/2	83

Latch Swing Bolts

- Black Oxide Finish – steel only
- Case Hardened – steel only
- Material: 12L14 Steel or 303 Stainless Steel
- Thread Class 2A UNC
- Many sizes conform to TCMAI standards



Special sizes quoted upon request

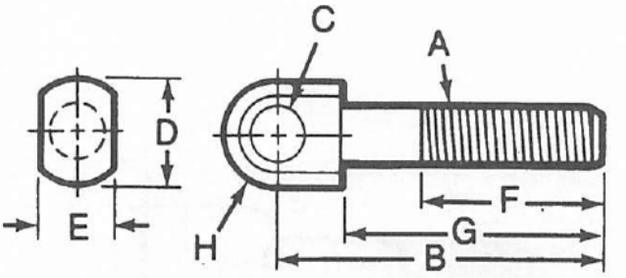

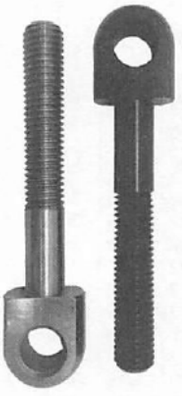

Inch

Steel Part No.	Stainless Steel Part No.	Thread A	B	+.002 -.000 C	D	+.000 -.005 E	F	G	H	Weight (lbs/100pcs)
43017	**43037**	10-32	1	3/16	3/8	3/16	9/16	13/16	3/16	1.4
43018	**43038**	10-32	2	3/16	3/8	3/16	1	1-13/16	3/16	1.9
43001	**43021**	1/4-20	1-1/2	1/4	1/2	5/16	3/4	1-3/16	1/4	3
43002	**43022**	1/4-20	2-1/2	1/4	1/2	5/16	1-1/4	2-3/16	1/4	4.1
43013	**43033**	1/4-20	2-5/8	1/4	1/2	1/4	2-5/16	2-5/16	1/4	5
43003	**43023**	5/16-18	2	5/16	5/8	3/8	1	1-5/8	5/16	6
43004	**43024**	5/16-18	3	5/16	5/8	3/8	1-3/8	2-5/8	5/16	9
43014	**43034**	5/16-18	3-3/16	5/16	5/8	5/16	2-13/16	2-13/16	21/64	9.5
43005	**43025**	3/8-16	2-1/2	3/8	3/4	1/2	1-3/8	2	3/8	10
43006	**43026**	3/8-16	3-1/2	3/8	3/4	1/2	2	3	3/8	14
43015	**43035**	3/8-16	3-3/4	3/8	3/4	3/8	3-5/16	3-3/8	25/64	20
43007	**43027**	1/2-13	3-1/8	1/2	1	5/8	1-3/4	2-1/2	1/2	28
43008	**43028**	1/2-13	4-1/8	1/2	1	5/8	2-1/4	3-1/2	1/2	30
43016	**43036**	1/2-13	4-7/8	1/2	1	1/2	4-5/16	4-5/16	33/64	37
43009	**43029**	5/8-11	3-1/2	5/8	1-1/4	3/4	1-5/8	2-3/4	5/8	45
43010	**43030**	5/8-11	4-3/4	5/8	1-1/4	3/4	2-1/2	4	5/8	55
43011	**43031**	3/4-10	4-1/2	3/4	1-1/2	7/8	2	3-5/8	3/4	65
43012	**43032**	3/4-10	6	3/4	1-1/2	7/8	3	5-1/8	3/4	83

Metric

Steel Part No.	Stainless Steel Part No.	Thread A	B	+.05 -.00 C	D	+.00 -.05 E	F	G	H	Weight (lbs/100pcs)
43050	**43070**	M6 x 1.0	50	6	12.7	6	37	44	6.35	4.1
43052	**43072**	M8 x 1.25	50	8	15.9	8	35	42	7.95	6
43054	**43074**	M10 x 1.5	125	10	19.1	10	108	115	9.53	20
43056	**43076**	M12 x 1.75	150	12	25.4	12	131	138	11.96	39
43058	**43078**	M16 x 2.0	150	16	31.8	16	127	134	15.95	58
43060	**43080**	M20 x 2.5	175	20	38.1	20	148	155	19.96	89

2-1274 • www
Get quote
Angic Global Solutions 1-888-872-0690
https://www.AngicGlobal.com Sales@AngicGlobal.com

Plain Forged Eye Bolts

- C1030 Material
- Hot Forged
- For safe working load rating and breaking strength information, see table below.



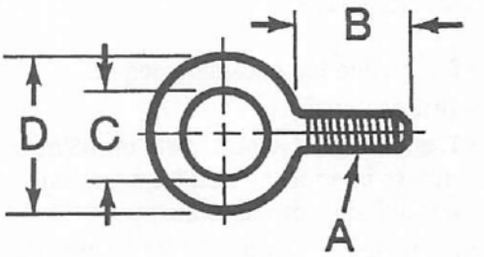

Part No.	Thread A	B	C	D	Weight (lbs/100pcs)
43102	3/8-16	1-1/4	1	1-21/32	15
43103	1/2-13	1-1/2	1-3/16	2-1/16	25
43104	5/8-11	1-3/4	1-3/8	2-1/2	56
43105	3/4-10	2	1-1/2	2-13/16	94

Shoulder Forged Eye Bolts

- C1030 Material
- Hot Forged
- For safe working load rating and breaking strength information, see table below.



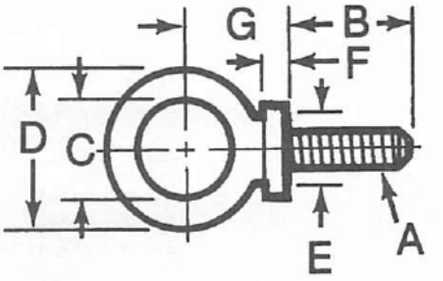

Part No.	Thread A	B	C	D	E	F	G	Weight (lbs/100pcs)
43202	3/8-16	1-1/4	1	1-21/32	11/16	3/16	1-3/16	18
43203	1/2-13	1-1/2	1-3/16	2-1/16	7/8	1/4	1-13/32	35
43204	5/8-11	1-3/4	1-3/8	2-1/2	1-1/8	1/4	1-11/16	75
43205	3/4-10	2	1-1/2	2-13/16	1-1/4	5/16	1-13/16	101

Standard Eyebolt Rated Capacity

Eye Bolt Size	Plain Part No.	Shoulder Part No.	Safe Working Load	Breaking Strength
3/8"	43102	43202	1,300 lbs.	6,300 lbs.
1/2"	43103	43203	2,400 lbs.	12,000 lbs.
5/8"	43104	43204	4,000 lbs.	20,000 lbs.
3/4"	43105	43205	5,000 lbs.	25,000 lbs.

Rated capacity is for **STRAIGHT LIFTS – angle lifts should be avoided.** If using angle lifts, **SHOULDER EYEBOLTS** are recommended and **MUST BE USED WITH A STEEL WASHER** so they seat on the shoulder at all times. **Load limits are reduced by 75% on angle lifts.**

Also see our selection of hoist rings, pages 120-140.

ANGIC GLOBAL SOLUTIONS

Get quote

332-1274 • ww

Angic Global Solutions 1-888-872-0690
https://www.AngicGlobal.com Sales@AngicGlobal.com

T-Slot Nuts

- Black oxide finish, case hardened
- 1018 Material
- The last thread is incomplete on T-Slot Nuts to prevent the stud from turning through the bottom of the nut.
- Many sizes conform to TCMAI standards
- Special sizes quoted upon request
- **Standard package quantity:**
  - **41401- 41419: 25 pcs.**
  - **61401- 61413: 25 pcs.**

* T-Slot Nuts are undersized to fit machine table slot

** English T-Slot Nut will fit this size metric machine T-Slot.

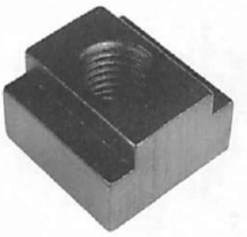

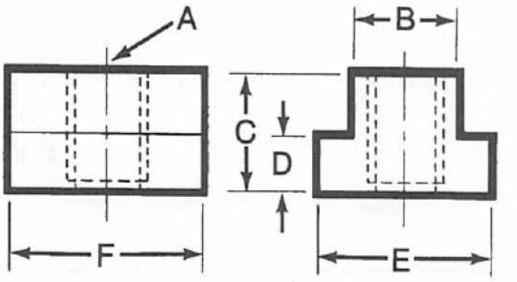

Inch

Part No.	Tapped Through Part No.	Thread A	*English Table Slot B	**Metric Table Slot	C	D	E	F	Wt. (lbs/ 100 pcs)
41401	**41401T**	1/4-20	5/16	8MM	1/4	3/16	9/16	9/16	1.7
41402	**41402T**	1/4-20	3/8	10MM	3/8	15/64	9/16	9/16	2.5
41403	**41403T**	5/16-18	3/8	10MM	3/8	1/4	5/8	7/8	4.2
41433	**41433T**	5/16-18	7/16	12MM	1/2	7/32	11/16	7/8	5.8
41434	**41434T**	5/16-18	1/2	13MM	1/2	9/32	7/8	7/8	7.7
41404	**41404T**	3/8-16	7/16	12MM	1/2	7/32	11/16	7/8	5.4
41405	**41405T**	3/8-16	1/2	13MM	1/2	9/32	7/8	7/8	7.3
41406	**41406T**	3/8-16	9/16	15MM	5/8	11/32	7/8	1-1/8	12.7
41407	**41407T**	7/16-14	1/2	13MM	1/2	9/32	7/8	7/8	6.8
41408	**41408T**	7/16-14	1/2	13MM	3/8	7/32	3/4	7/8	4.6
41409	**41409T**	1/2-13	9/16	15MM	5/8	11/32	7/8	1-1/8	11.4
41410	**41410T**	1/2-13	5/8	16MM	5/8	11/32	1	1-1/8	13.4
41411	**41411T**	1/2-13	5/8	16MM	3/4	3/8	1-1/8	1-1/8	16.9
41412	**41412T**	1/2-13	11/16	18MM	3/4	7/16	1-1/8	1-1/4	21.3
41413	**41413T**	1/2-13	3/4	20MM	3/4	15/32	1-1/4	1-1/4	24.2
41415	**41415T**	5/8-11	11/16	18MM	3/4	7/16	1-1/8	1-1/4	19
41416	**41416T**	5/8-11	3/4	20MM	3/4	15/32	1-1/4	1-1/4	22.2
41417	**41417T**	5/8-11	13/16	21MM	1	9/16	1-1/4	1-1/2	37
41418	**41418T**	3/4-10	13/16	21MM	1	9/16	1-1/4	1-1/2	33.9
41419	**41419T**	3/4-10	7/8	23MM	1	9/16	1-1/2	1-1/2	40.5
41420	**41420T**	3/4-10	1	26MM	1	5/8	1-5/8	1-3/4	57.6
41421	**41421T**	3/4-10	1	26MM	1-1/2	3/4	1-3/4	1-3/4	84
41422	**41422T**	3/4-10	1-1/16	27MM	1-1/8	11/16	1-5/8	2	76.6
41423	**41423T**	7/8-9	1	26MM	1	5/8	1-5/8	1-3/4	53.6
41424	**41424T**	7/8-9	1-1/16	27MM	1-1/8	11/16	1-5/8	2	71.2
41425	**41425T**	7/8-9	1-1/8	29MM	1-1/2	3/4	1-3/4	2	97.6
41429	**41429T**	7/8-9	1-5/16	34MM	1-1/4	15/16	2	2	109
41426	**41426T**	1-8	1-1/16	27MM	1-1/8	11/16	1-5/8	2	66.2
41427	**41427T**	1-8	1-1/8	29MM	1-1/2	3/4	1-3/4	2	91.3
41428	**41428T**	1-8	1-1/4	32MM	1-1/4	7/8	2	2	98.8
41430	**41430T**	1-8	1-5/16	34MM	1-1/4	15/16	2	2	102.5
41432	**41432T**	1-1/4-7	1-3/8	36MM	1-3/4	1-1/8	2-1/2	2-1/2	208.5

Continued on page 21

2-1274 • www
Get quote
Angic Global Solutions 1-888-872-0690
https://www.AngicGlobal.com Sales@AngicGlobal.com

T-Slot Nuts (continued)

NEW Inch Sizes

Part No.	Tapped Through Part No.	Thread A	*English Table Slot B	**Metric Table Slot	C	D	E	F	Wt. (lbs/ 100 pcs)
41470	**41470T**	1/4-20	3/8	10MM	3/8	1/4	5/8	7/8	4.7
41471	**41471T**	5/16-18	7/16	12MM	1/2	7/32	3/4	1	7.4
41472	**41472T**	3/8-16	7/16	12MM	1/2	7/32	3/4	1	7
41473	**41473T**	3/8-16	1/2	13MM	1/2	9/32	7/8	1	9
41474	**41474T**	3/8-16	9/16	15MM	5/8	11/32	7/8	1	11.6
41476	**41476T**	3/8-16	5/8	16MM	5/8	3/8	1	1	13.7
41478	**41478T**	3/8-16	5/8	16MM	7/8	7/16	1-3/16	1-3/16	24.7
41475	**41475T**	1/2-13	9/16	15MM	5/8	11/32	7/8	1	10.5
41477	**41477T**	1/2-13	5/8	16MM	5/8	3/8	1	1	12.5
41479	**41479T**	1/2-13	5/8	16MM	7/8	7/16	1-3/16	1-3/16	23.2
41480	**41480T**	1/2-13	11/16	18MM	3/4	13/32	1-1/8	1-1/8	19.1
41481	**41481T**	5/8-11	11/16	18MM	3/4	13/32	1-1/8	1-1/8	17.4
41482	**41482T**	5/8-11	3/4	20MM	3/4	1/2	1-1/4	1-1/8	21.1
41483	**41483T**	5/8-11	13/16	21MM	1	9/16	1-3/8	1-1/21	41.7
41484	**41484T**	3/4-10	13/16	21MM	1	9/16	1-3/8	1-1/2	38.6
41486	**41486T**	3/4-10	13/16	21MM	1	17/32	1-1/4	1-1/2	35.1
41485	**41485T**	3/4-10	7/8	23MM	1	5/8	1-1/2	1-1/2	44.1
41487	**41487T**	3/4-10	1	26MM	1-1/4	3/4	1-1/2	1-1/2	57.4
41488	**41488T**	7/8-9	1	26MM	1-1/2	3/4	1-3/4	1-1/2	68.6
41490	**41490T**	7/8-9	1-1/16	27MM	1-1/2	3/4	1-3/4	1-1/2	70.4
41489	**41489T**	7/8-9	1-1/8	29MM	1-1/2	3/4	1-3/4	1-1/2	72.2
41491	**41491T**	1-8	1-1/8	29MM	1-1/2	3/4	1-3/4	1-3/4	81.4

Metric

Part No.	Tapped Through Part No.	Thread A	**Metric Table Slot	*English Table Slot B	C	D	E	F	Wt. (lbs/ 100pcs)
61401	**61401T**	M6 x 1.0	8MM	5/16	10	6	14	19	3
61402	**61402T**	M6 x 1.0	10MM	7/16	11	6	16	22	5
61403	**61403T**	M8 x 1.25	10MM	7/16	11	6	16	22	5
61404	**61404T**	M10 x 1.5	12MM	1/2	13	7	19	22	6
61405	**61405T**	M10 x 1.5	14MM	9/16	16	9	22	29	12
61406	**61406T**	M12 x 1.75	14MM	9/16	16	9	22	29	12
61407	**61407T**	M12 x 1.75	16MM	5/8	16	9	25	29	14
61408	**61408T**	M12 x 1.75	17MM	11/16	19	11	29	32	21
61414	**61414T**	M12 x 1.75	18MM	3/4	19	11	29	32	19
61409	**61409T**	M16 x 2.0	18MM	3/4	19	11	29	32	19
61410	**61410T**	M16 x 2.0	20MM	13/16	25	14	32	38	36
61411	**61411T**	M20 x 2.5	22MM	7/8	25	14	35	38	36
61412	**61412T**	M24 x 3.0	27MM	1-1/16	29	18	41	51	69
61413	**61413T**	M24 x 3.0	33MM	1-5/16	32	24	51	51	106

Stainless Steel T-Nuts

- 300 Stainless Steel
- The last thread is incomplete to prevent the stud from turning through the bottom of the nut.

* T-Nuts are undersized to fit machine table slot.



Part No.	Thread A	*English Table Slot B	C	D	E	F	Weight (lbs/100pcs)
47401	1/4-20	5/16	1/4	3/16	1/2	9/16	3
47403	5/16-18	3/8	3/8	1/4	5/8	7/8	6
47404	3/8-16	7/16	3/8	13/64	3/4	7/8	6.5
47405	3/8-16	1/2	1/2	9/32	7/8	7/8	9
47409	1/2-13	9/16	1/2	11/32	7/8	1-1/8	12
47410	1/2-13	5/8	5/8	11/32	1	1-1/8	15
47412	1/2-13	11/16	3/4	7/16	1	1-1/4	22
47415	5/8-11	11/16	3/4	7/16	1	1-1/4	20
47416	5/8-11	3/4	3/4	15/32	1-1/4	1-1/4	23

ANGIC GLOBAL SOLUTIONS

Get quote

332-1274 • ww

Angic Global Solutions 1-888-872-0690

https://www.AngicGlobal.com Sales@AngicGlobal.com

Quarter Turn T-Slot Nuts

- Sintered Metal
- The last thread is incomplete to prevent the stud from turning through the bottom of the nut
- Special sizes quoted upon request

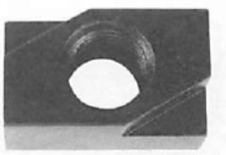

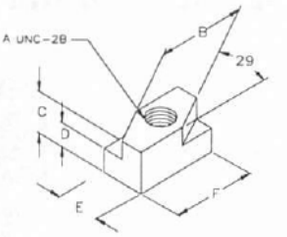

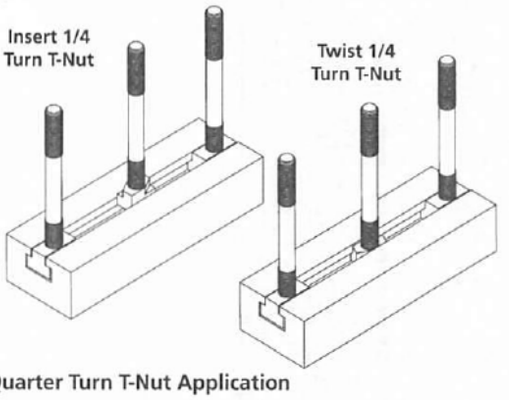

Quarter Turn T-Nut Application

Part No.	Thread A	English Table Slot B	Metric Table Slot	C	D	E	F	Weight (lbs/100pcs)
41450	3/8-16	7/16	12MM	1/2	0.208	0.438	0.75	2.7
41451	3/8-16	1/2	12MM	1/2	0.271	0.500	1	4.6
41452	1/2-13	9/16	15MM	5/8	0.333	0.563	0.94	5.3
41453	1/2-13	5/8	16MM	5/8	0.333	0.625	1.25	8.9
41454	5/8-11	11/16	18MM	3/4	0.427	0.688	1.38	11.9
41455	5/8-11	3/4	20MM	3/4	0.458	0.75	1.50	15.7
41456	1/2-13	11/16	18MM	3/4	0.427	0.688	1.3	14.2
41457	3/4-10	1	26MM	1	0.615	1	1.75	33.6

* Quarter Turn T-Slot Nuts are undersized to fit machine table slot

Flange Nuts

- Black oxide finish, case hardened
- 12L14 Material
- Available in Coarse or Fine Threads
- **Standard package quantity:**
  41601- 41607: 25 pcs.
  41701- 41707: 25 pcs.
- Many sizes conform to TCMAI standards
- Special sizes quoted upon request
- Metric: Dimension in millimeters



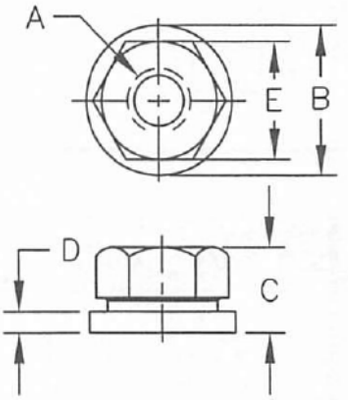

UNC Flange Nuts

Part No.	Thread A	B	C	D	HEX E	Weight (lbs/100pcs)
41601	1/4-20	5/8	5/16	3/32	1/2	3
41602	5/16-18	3/4	3/8	1/8	9/16	4
41603	3/8-16	7/8	1/2	1/8	11/16	5
41604	7/16-14	1	9/16	5/32	3/4	7
41605	1/2-13	1-1/8	11/16	3/16	7/8	11
41606	5/8-11	1-3/8	13/16	3/16	1-1/16	18
41607	3/4-10	1-5/8	1	1/4	1-1/4	31
41608	7/8-9	1-3/4	1-1/8	1/4	1-7/16	42
41609	1-8	2	1-1/4	1/4	1-5/8	59
41611	1-1/4 -7	2-1/2	1-1/4	1/4	1-13/16	66

UNF Flange Nuts

Part No.	Thread A	B	C	D	HEX E	Weight (lbs/100pcs)
41701	1/4-28	5/8	5/16	3/32	1/2	3
41702	5/16-24	3/4	3/8	1/8	9/16	4
41703	3/8-24	7/8	1/2	1/8	11/16	5
41704	7/16-20	1	9/16	5/32	3/4	7
41705	1/2-20	1-1/8	11/16	3/16	7/8	11
41706	5/8-18	1-3/8	13/16	3/16	1-1/16	18
41707	3/4-16	1-5/8	1	1/4	1-1/4	31
41708	7/8-14	1-3/4	1-1/8	1/4	1-7/16	42
41709	1-14	2	1-1/4	1/4	1-5/8	59

Metric

Part No.	Thread A	B	C	D	HEX E	Weight (lbs/100pcs)
61601	M6 x 1.0	16	8	2	10	1.8
61602	M8 x 1.25	19	10	2.5	13	2.4
61603	M10 x 1.5	22	13	3	17	3.5
61604	M12 x 1.75	27	17	4	19	9.5
61605	M16 x 2.0	33	21	5	24	16.5
61606	M20 x 2.5	40	25	6	30	29
61607	M24 x 3.0	49	32	7	36	51

Get quote
Angic Global Solutions 1-888-872-0690
https://www.AngicGlobal.com Sales@AngicGlobal.com

Stainless Steel Flange Nuts



- 303 Stainless Steel
- Special sizes quoted upon request

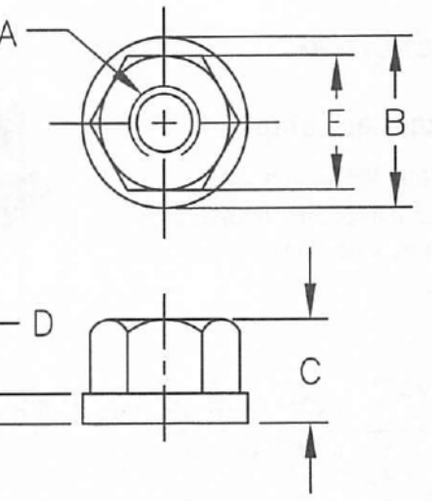

Can be used with:
- Driver Studs, page 8
- T-Bolts, pages 16
- Latch Bolts, page 18



Part No.	Thread A	B	C	D	HEX E	Weight (lbs/100pcs)
47601	1/4-20	5/8	5/16	3/32	1/2	4
47602	5/16-18	3/4	3/8	1/8	9/16	5
47603	3/8-16	7/8	1/2	1/8	11/16	6
47604	7/16-14	1	9/16	5/32	3/4	8
47605	1/2-13	1-1/8	11/16	3/16	7/8	12
47606	5/8-11	1-3/8	13/16	3/16	1-1/16	19
47607	3/4-10	1-5/8	1	1/4	1-1/4	32
47608	7/8-9	1-3/4	1-1/8	1/4	1-7/16	43
47609	1-8	2	1-1/4	1/4	1-5/8	60
47611	1-1/4 -7	2-1/2	1-1/4	1/4	1-13/16	67

Swivel Flange Nuts



- Black oxide finish, case hardened
- 12L14 Material
- Head rotates but washer remains stationary upon contact and holds rigidly without marring the workpiece

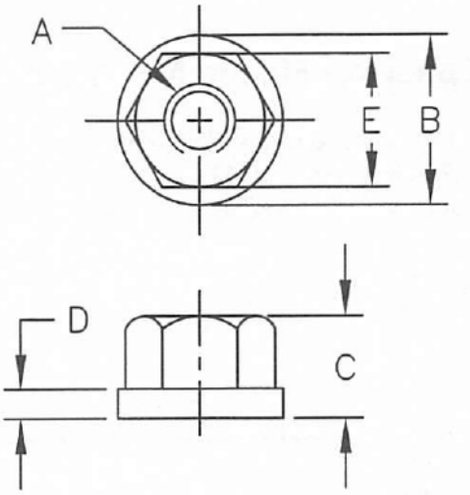

Can be used with:
- Driver Studs, pages 8-12
- T-Slot Bolts, pages 13-15
- T-Bolts, pages 16-17



Part No.	Thread A	B	C	D	HEX E	Weight (lbs/100pcs)
42001	1/4-20	5/8	3/8	1/8	1/2	2
42002	5/16-18	3/4	7/16	9/64	9/16	3
42003	3/8-16	7/8	17/32	5/32	11/16	4
42004	1/2-13	1-1/8	23/32	7/32	7/8	11
42005	5/8-11	1-3/8	29/32	1/4	1-1/16	18
42006	3/4-10	1-5/8	1-1/64	9/32	1-1/4	28
42007	7/8-9	1-3/4	1-1/8	7/16	1-7/16	41
42008	1-8	2	1-15/64	15/32	1-5/8	57

ANGIC GLOBAL SOLUTIONS
Get quote
832-1274 • w
Angic Global Solutions 1-888-872-0690
https://www.AngicGlobal.com Sales@AngicGlobal.com

Spherical Flange Nuts

Stainless Steel



- Nut: 303 Stainless Steel
- Equalizes thread loads when used with Spherical Washers

Part No.	Thread A	B	C	D	HEX E	RAD. F	Weight (lbs/100pcs)
41821	1/4-20	5/8	5/16	3/32	1/2	3/4	2
41822	5/16-18	3/4	3/8	3/32	9/16	1	4
41823	3/8-16	7/8	1/2	1/8	11/16	1-1/4	6
41824	1/2-13	1-1/8	11/16	5/32	7/8	1-1/2	8
41825	5/8-11	1-3/8	13/16	3/16	1-1/16	1-3/4	13
41826	3/4-10	1-5/8	1	1/4	1-1/4	2-1/4	20

For spherical washers, see pgs. 28-29

Steel



- Black Oxide Finish and Case Hardened
- 12L14 Material
- Many sizes conform to TCMAI standards
- When used with Spherical Washers Flange Nuts will equalize thread loads
- Standard package quantity:
  41801- 41807: 25 pcs.

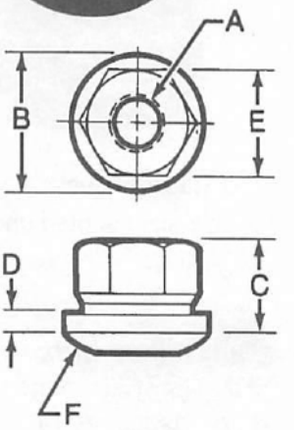

Part No.	Thread A	B	C	D	HEX E	RAD. F	Weight (lbs/100pcs)
41801	1/4-20	5/8	5/16	3/32	1/2	3/4	2
41802	5/16-18	3/4	3/8	1/8	9/16	1-1/4	4
41803	3/8-16	7/8	1/2	1/8	11/16	1-1/4	6
41804	7/16-14	1	9/16	5/32	3/4	1-1/2	8
41805	1/2-13	1-1/8	11/16	3/16	7/8	1-1/2	13
41806	5/8-11	1-3/8	13/16	3/16	1-1/16	1-3/4	20
41807	3/4-10	1-5/8	1	1/4	1-1/4	2-1/4	34
41808	7/8-9	1-3/4	1-1/8	1/4	1-7/16	2-1/2	45
41809	1-8	2	1-1/4	1/4	1-5/8	2-3/4	65
41811	1-1/4-7	2-1/2	1-1/4	1/4	1-13/16	3	76

Spherical Flange Nut Assemblies

- Assemblies consist of Flange Nuts (Part Nos. 41801-41811) and Spherical Washers (Part Nos. 42741-42750)

For material information, see individual components



Part No.	Thread Size	Total Degree of Rotation	Weight (lbs/100pcs)
41901	1/4-20	5	3
41902	5/16-18	5	6
41903	3/8-16	3	8
41904	7/16-14	4	11
41905	1/2-13	2	16
41906	5/8-11	2	25
41907	3/4-10	2	43
41908	7/8-9	3	56
41909	1-8	3	77
41911	1-1/4-7	3	104

Stainless Steel Spherical Flange Nut Assemblies

- Assemblies consist of 1 Stainless Steel Flange Nut (Part Nos. 41821-41826) and 1 Female Spherical Washer (Part Nos. 47741-47745)

For material information, see individual components



Part No.	Thread Size	Total Degree of Rotation	Weight (lbs/100pcs)
41921	1/4-20	5	3
41922	5/16-18	5	6
41923	3/8-16	3	8
41924	1/2-13	2	11
41925	5/8-11	2	16
41926	3/4-10	2	25

Get quote
Angic Global Solutions 1-888-872-0690
https://www.AngicGlobal.com Sales@AngicGlobal.com

Coupling (Extension) Nuts

- Low Carbon Steel Material
- Black oxide finish, case hardened
- Coupling Nuts can be used to join two or more studs for a desired length.
- Many sizes conform to TCMAI standards
- **Standard package quantity: 41501-41507: 25 pcs.**



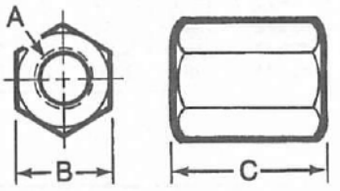

Part No.	Thread A	B	C	Weight (lbs/100pcs)
41501	1/4-20	1/2	5/8	4
41502	5/16-18	9/16	7/8	7
41503	3/8-16	11/16	1	9
41504	7/16-14	3/4	1-1/4	13
41505	1/2-13	7/8	1-1/4	18
41506	5/8-11	1-1/16	1-5/8	34
41507	3/4-10	1-1/4	1-7/8	50
41508	7/8-9	1-7/16	2-1/4	88
41509	1-8	1-5/8	2-1/2	106

Metric *Dimensions in millimeters*

Part No.	Thread A	B	C	Weight (lbs/100pcs)
61501	M6 x 1.00	13	16	3
61502	M8 x 1.25	14	19	4.6
61503	M10 x 1.5	16	24	9
61504	M12 x 1.75	22	32	18
61505	M16 x 2.0	27	40	30
61506	M20 x 2.5	32	51	52
61507	M24 x 3.0	38	64	94

Heavy Hex Nuts



- Black Oxide Finish
- High Grade Alloy Steel
- Will outlast ordinary Hex Nuts when used in repetitive operations
- **Standard package quantity: 25 pcs.**

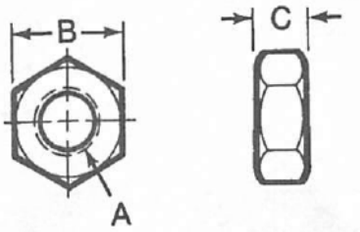

Part No.	Thread A	B	C	Weight (lbs/100pcs)
42101	1/4-20	1/2	15/64	1
42102	5/16-18	9/16	19/64	2
42103	3/8-16	11/16	23/64	4
42104	7/16-14	3/4	27/64	5
42105	1/2-13	7/8	31/64	6
42106	5/8-11	1-1/16	39/64	11
42107	3/4-10	1-1/4	47/64	19
42108	7/8-9	1-7/16	55/64	26
42109	1-8	1-5/8	63/64	40

Heavy Hex Jam Nuts



- Black oxide finish, case hardened
- High Grade Alloy Steel
- Will outlast ordinary Hex Jam Nuts when used in repetitive operations
- **Standard package quantity: 25 pcs.**

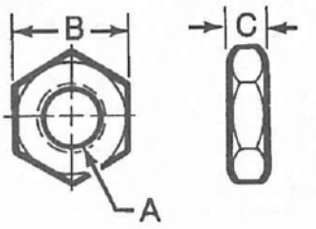

Part No.	Thread A	B	C	Weight (lbs/100pcs)
42201	1/4-20	1/2	11/64	1
42202	5/16-18	9/16	13/64	1
42203	3/8-16	11/16	15/64	2
42204	7/16-14	3/4	17/64	3
42205	1/2-13	7/8	19/64	3
42206	5/8-11	1-1/16	23/64	7
42207	3/4-10	1-1/4	27/64	11
42208	7/8-9	1-7/16	31/64	16
42209	1-8	1-5/8	35/64	20

ANGIC
Get quote
-832-1274 • w
Angic Global Solutions 1-888-872-0690
https://www.AngicGlobal.com Sales@AngicGlobal.com

Hardened Flat Washers

- Black Oxide Finish and Case Hardened (steel washers only)
- Material: C1010 Steel or 303 Stainless Steel
- Many sizes conform to TCMAI standards
- Large quantities quoted upon request



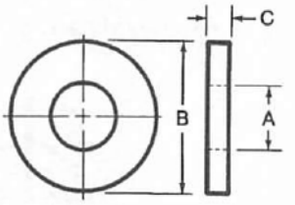

Metric

Part No.	Stud Size	A	B	C	Weight (lbs/100pcs)
63601	M6	7	16	3	1
63602	M8	9	19	3	2
63603	M10	11	22	3	3
63605	M12	13	29	3	3
63606	M16	17	35	3	4
63608	M20	22	44	5	8
63609	M24	26	51	4	12

English

Steel Part No.	Stainless Steel Part No.	Stud Size	A	B	C	Weight (lbs/100pcs)
42600	**42660**	#10	13/64	1/2	3/32	0.5
42601	**42661**	1/4	9/32	5/8	1/8	1
42602	**42662**	5/16	11/32	3/4	1/8	2
42603	**42663**	3/8	13/32	7/8	1/8	2
42604	**42664**	7/16	15/32	1	1/8	3
42605	**42665**	1/2	17/32	1-1/8	1/8	3
42606	**42666**	5/8	21/32	1-3/8	1/8	4
42607	**42667**	3/4	25/32	1-5/8	5/32	8
42608	**42668**	7/8	29/32	1-3/4	5/32	8
42609	**42669**	1	1-1/32	2	3/16	12
42610	**42670**	1-1/8	1-5/32	2-1/4	7/32	19
42611	**42671**	1-1/4	1-9/32	2-1/2	9/32	28
42612	**42672**	#4	1/8	5/16	5/64	0.5
42613	**42673**	#6	5/32	3/8	5/64	0.5
42614	**42674**	#8	3/16	7/16	5/64	0.5

Heavy Duty Hardened Flat Washers

- Black Oxide Finish
- Case Hardened
- C1010 Material
- Large quantities quoted upon request



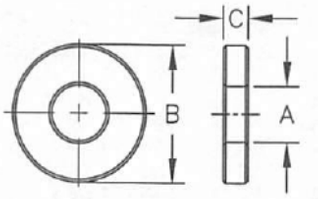

Metric

Part No.	Stud Size	A	B	C	Weight (lbs/100pcs)
63619	M6	7	16	5	2
63620	M8	9	19	5	2
63621	M10	11	22	5	3
63623	M12	13	29	5	4
63624	M16	17	35	5	6
63626	M20	22	44	6	12
63627	M24	26	51	7	18

English

Part No.	Stud Size	A	B	C	Weight (lbs/100pcs)
42619	1/4	9/32	5/8	3/16	2
42620	5/16	11/32	3/4	3/16	2
42621	3/8	13/32	7/8	3/16	3
42622	7/16	15/32	1	3/16	4
42623	1/2	17/32	1-1/8	3/16	4
42624	5/8	21/32	1-3/8	3/16	6
42625	3/4	25/32	1-5/8	1/4	11
42626	7/8	29/32	1-3/4	1/4	11
42627	1	1-1/32	2	9/32	18

Get quote
-1274 • www
Angic Global Solutions 1-888-872-0690
https://www.AngicGlobal.com Sales@AngicGlobal.com

Heavy Duty Hardened Flat Washer Assortment Part No. 42697

- **Heavy Duty Flat Washer Assortment Contains:**
  42621: 10 pcs.
  42623: 10 pcs.
  42624: 10 pcs.
  42625: 10 pcs.
  1 Holder
  4 Holder Pins
- For material information, see individual components.

Hardened Flat Washer Assortment Part No. 42699

- **Flat Washer Assortment Contains:**
  42601: 50 pcs.
  42603: 50 pcs.
  42605: 25 pcs.
  42606: 25 pcs.
  42607: 12 pcs.
  42609: 12 pcs.
  1 Holder
  8 Holder Pins
- For material information, see individual components.

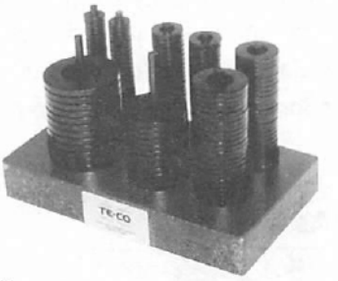

Metric Heavy Duty Hardened Flat Washer Assortment Part No. 63697

- **Metric Heavy Duty Flat Washer Assortment Contains:**
  63621: 10 pcs.
  63623: 10 pcs.
  63624: 10 pcs.
  63626: 10 pcs.
  1 Holder
  4 Holder Pins
- For material information, see individual components.

Metric Hardened Flat Washer Assortment Part No. 63699

- **Metric Flat Washer Assortment Contains:**
  63601: 50 pcs.
  63602: 50 pcs.
  63605: 25 pcs.
  63606: 25 pcs.
  63608: 12 pcs.
  63609: 12 pcs.
  1 Holder
  8 Holder Pins
- For material information, see individual components.

Visit us online at www.te-co.com

Easy to navigate product pages • Request quotes online
Get current list prices quickly • TE-CO representative locator
Search function with competitor conversion capability

ANGIC GLOBAL SOLUTIONS
Get quote
Angic Global Solutions 1-888-872-0690
https://www.AngicGlobal.com Sales@AngicGlobal.com

Spherical Washers – Steel

- Black Oxide Finish
- Case Hardened
- Material: 12L14 steel
- Tops and bottoms also sold separately
- Reduces stress on threads
- Bottom Washer can be used with Spherical Flange Nuts
- Compensates for slight misalignment between the workpiece and strap clamp
- Many sizes conform to TCMAI standards
- Special sizes quoted upon request

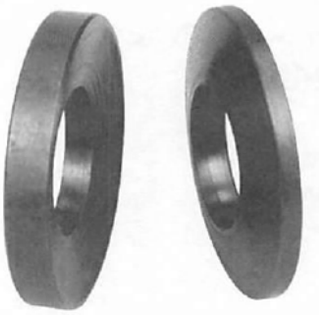

Assemblies

Steel Part No.	Male Part No. A	Female Part No. B	Stud Size	Ref. C	Total Degree of Rotation	Weight (lbs/100pcs)
42701	42721	42741	3/16 and 1/4	3/16	8 and 5	1
42702	42722	42742	5/16 and 3/8	1/4	5 and 3	4
42703	42723	42743	7/16 and 1/2	5/16	4 and 2	8
42704	42724	42744	5/8	5/16	2	10
42705	42725	42745	3/4	3/8	3	17
42706	42726	42746	7/8	3/8	3	18
42707	42727	42747	1	1/2	3	34
42708	42728	42748	1-1/8	1/2	3	38
42709	42729	42749	1-1/4	1/2	3	50
42710	42730	42750	1-1/2	1/2	3	80

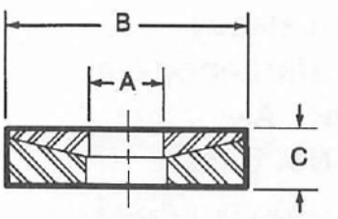

Male (Top) Spherical Washers

Steel Part No.	Stud Size	A	B	+.000 -.005 C	Rad. R	Total Weight (lbs/100pcs)
42721	3/16 and 1/4	9/32	5/8	.120	3/4	1
42722	5/16 and 3/8	13/32	7/8	.130	1-1/4	1
42723	7/16 and 1/2	17/32	1-1/8	.188	1-1/2	3
42724	5/8	21/32	1-3/8	.188	1-3/4	4
42725	3/4	25/32	1-5/8	.219	2-1/4	7
42726	7/8	15/16	1-3/4	.240	2-1/2	9
42727	1	1-1/16	2	.330	2-3/4	17
42728	1-1/8	1-3/16	2-1/4	.281	3	16
42729	1-1/4	1-5/16	2-1/2	.312	3	22
42730	1-1/2	1-9/16	2-7/8	.350	3	28

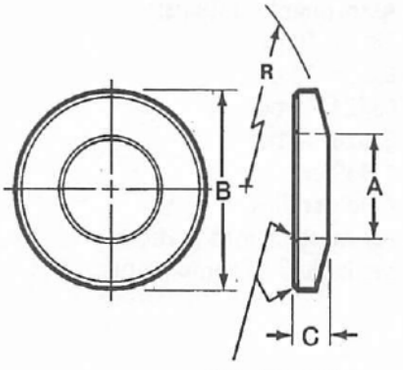

Female (Bottom) Spherical Washers

Steel Part No.	Stud Size	A	B	+.000 -.005 C	Rad. R	Total Weight (lbs/100pcs)
42741	3/16 and 1/4	5/16	5/8	.120	3/4	1
42742	5/16 and 3/8	7/16	7/8	.156	1-1/4	2
42743	7/16 and 1/2	9/16	1-1/8	.188	1-1/2	3
42744	5/8	11/16	1-3/8	.219	1-3/4	5
42745	3/4	13/16	1-5/8	.265	2-1/4	10
42746	7/8	1	1-3/4	.240	2-1/2	9
42747	1	1-1/8	2	.290	2-3/4	14
42748	1-1/8	1-1/4	2-1/4	.350	3	22
42749	1-1/4	1-3/8	2-1/2	.375	3	28
42750	1-1/2	1-5/8	2-7/8	.390	3	35

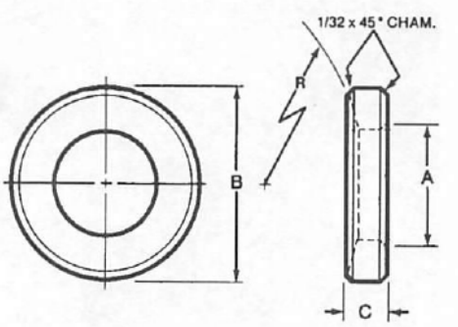

Get quote
Angic Global Solutions 1-888-872-0690
https://www.AngicGlobal.com Sales@AngicGlobal.com

Spherical Washers – Stainless Steel

- Material: 303 stainless steel
- Tops and bottoms also sold separately
- Reduces stress on threads
- Bottom Washer can be used with Spherical Flange Nuts
- Compensates for slight misalignment between the workpiece and strap clamp
- Many sizes conform to TCMAI standards
- Special sizes quoted upon request



Assemblies

Stainless Steel Part No.	Male Part No. A	Female Part No. B	Stud Size	Ref. C	Total Degree of Rotation	Weight (lbs/100pcs)
47701	47721	47741	1/4	3/16	8	1
47702	47722	47742	3/8	1/4	5	4
47703	47723	47743	1/2	5/16	2	8
47704	47724	47744	5/8	5/16	2	10
47705	47725	47745	3/4	3/8	3	17

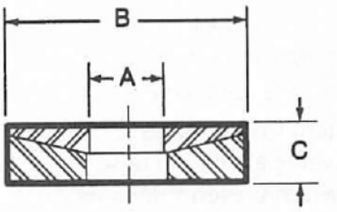

Male (Top) Spherical Washers

Stainless Steel Part No.	Stud Size	A	B	+.000 -.005 C	Rad. R	Total Weight (lbs/100pcs)
47721	1/4	9/32	5/8	1/8	3/4	1
47722	3/8	13/32	7/8	11/64	1-1/4	1
47723	1/2	17/32	1-1/8	13/64	1-1/2	3
47724	5/8	21/32	1-3/8	13/64	1-3/4	4
47725	3/4	25/32	1-5/8	1/4	2-1/4	7

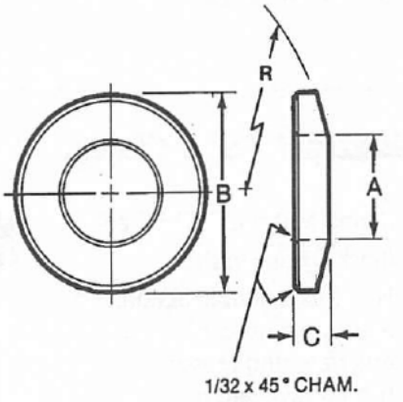

Female (Bottom) Spherical Washers

Stainless Steel Part No.	Stud Size	A	B	+.000 -.005 C	Rad. R	Total Weight (lbs/100pcs)
47741	5/16	9/32	5/8	1/8	3/4	1
47742	7/16	13/32	7/8	11/64	1-1/4	2
47743	9/16	17/32	1-1/8	7/32	1-1/2	3
47744	11/16	21/32	1-3/8	7/32	1-3/4	5
47745	13/16	25/32	1-5/8	1/4	2-1/4	10

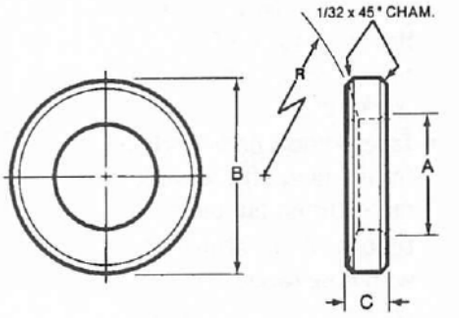

ANGIC
Get quote
332-1274 • w
Angic Global Solutions 1-888-872-0690
https://www.AngicGlobal.com Sales@AngicGlobal.com

Nuzzler® Edge Clamps: Standard Grip

- Clamp Material: 1018 Steel
- Black Oxide Finish
- Features a double action, adjustable nose which exerts clamping pressures both downward and inward through a 45 degree angle.
- Noses have serrations for better gripping of non-finished or semi-finished workpieces
- Tapered slots prevent clamp from sliding off the workpiece during tightening
- Length "A" is calculated with nose raised 1/8"
- Clamp Washer is included with each Edge Clamp
- Standard Grip includes removable aluminum nose cap, which prevents damage to your workpiece

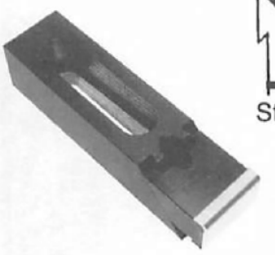



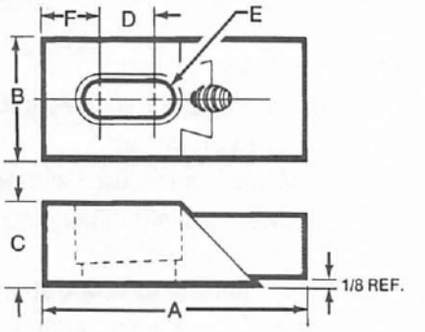

Part No.	A	Nose Style	B	C	D	Bolt Size E	F	G	Wrench Size	Wt. (lbs/100pcs)
33818	1-7/8	S	1	5/8	1/4	5/16	13/32	5/8	5/32	30
33820	2-3/8	S	1	5/8	3/4	5/16	5/16	5/8	5/32	35
33822	2-7/8	S	1	5/8	1-1/4	5/16	5/16	5/8	5/32	40
33802	2-5/16	S	1-1/4	5/8	3/8	3/8	7/16	5/8	3/16	43
33891	2-3/4	S	1-1/4	5/8	11/16	3/8	1/2	5/8	3/16	49
33806	3-5/16	S	1-1/2	3/4	3/4	1/2	11/16	3/4	1/4	88
33711	3-5/16	S	1-1/2	3/4	5/8	5/8	11/16	3/4	1/4	88
33824	4-1/16	S	1-1/2	7/8	1-1/4	1/2	1/2	7/8	1/4	112
33715	3-7/8	S	1-1/2	7/8	1-1/4	5/8	1/2	7/8	1/4	112
33804	4-1/8	S	1-1/4	5/8	2	3/8	11/16	5/8	3/16	73
33893	4-11/16	S	1-1/4	5/8	2-3/16	3/8	15/16	5/8	3/16	76
33808	5-3/16	S	1-1/2	3/4	2-1/2	1/2	5/8	3/4	1/4	123
33713	5-3/16	S	1-1/2	3/4	2-1/2	5/8	5/8	3/4	1/4	123
33826	5-5/16	S	1-1/2	7/8	2	1/2	7/8	7/8	1/4	155
33717	5-5/16	S	1-1/2	7/8	2	5/8	7/8	7/8	1/4	155
33810	5-13/16	S	1-1/2	1-1/4	2-1/4	1/2	1-1/16	3/4	1/4	216
33813	7-1/8	S	1-1/2	1-1/4	3-5/16	1/2	1-3/16	3/4	1/4	255
33828	7-1/4	S	1-1/2	7/8	3	1/2	1-3/8	7/8	1/4	205

Nuzzler® Edge Clamps: Low Grip

- Clamp Material: 1018 Steel
- Black Oxide Finish
- Features a double action, adjustable nose which exerts clamping pressures both downward and inward through a 45 degree angle.
- Noses have serrations for better gripping of non-finished or semi-finished workpieces
- Tapered slots prevent clamp from sliding off the workpiece during tightening
- Length "A" is calculated with nose raised 1/8"
- Low Profile Nose provides a greater machining clearance
- Clamp Washer is included with each Edge Clamp



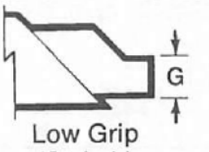

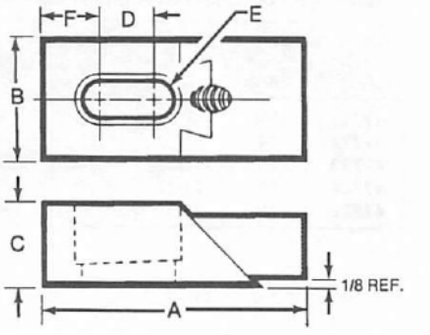

Part No.	A	Nose Style	B	C	D	Bolt Size E	F	G	Wrench Size	Wt. (lbs/100pcs)
33817	1-7/8	L	1	5/8	1/4	5/16	13/32	1/8	5/32	25
33819	2-3/8	L	1	5/8	3/4	5/16	5/16	1/8	5/32	29
33821	2-7/8	L	1	5/8	1-1/4	5/16	5/16	1/8	5/32	35
33801	2-5/16	L	1-1/4	5/8	3/8	3/8	7/16	1/4	3/16	38
33890	2-3/4	L	1-1/4	5/8	11/16	3/8	1/2	1/4	3/16	44
33805	3-5/16	L	1-1/2	3/4	3/4	1/2	11/16	3/8	1/4	81
33710	3-5/16	L	1-1/2	3/4	5/8	5/8	11/16	3/8	1/4	81
33823	4-1/16	L	1-1/2	7/8	1-1/4	1/2	1/2	1/4	1/4	100
33714	3-7/8	L	1-1/2	7/8	1-1/4	5/8	1/2	1/4	1/4	100
33803	4-1/8	L	1-1/4	5/8	2	3/8	11/16	1/4	3/16	63
33892	4-11/16	L	1-1/4	5/8	2-3/16	3/8	15/16	1/4	3/16	73
33807	5-3/16	L	1-1/2	3/4	2-1/2	1/2	5/8	3/8	1/4	117
33712	5-3/16	L	1-1/2	3/4	2-1/2	5/8	5/8	3/8	1/4	117
33829	5-1/4	L	2	1-1/4	1-3/8	3/4	27/32	3/8	5/16	235
33825	5-5/16	L	1-1/2	7/8	2	1/2	7/8	1/4	1/4	141
33716	5-5/16	L	1-1/2	7/8	2	5/8	7/8	1/4	1/4	141
33809	5-13/16	L	1-1/2	1-1/4	2-1/4	1/2	1-1/16	3/8	1/4	207
33812	7-1/8	L	1-1/2	1-1/4	3-5/16	1/2	1-3/16	3/8	1/4	252
33827	7-1/4	L	1-1/2	7/8	3	1/2	1-3/8	1/4	1/4	189

Get quote
Angic Global Solutions 1-888-872-0690
https://www.AngicGlobal.com Sales@AngicGlobal.com

Nuzzler® Edge Clamps: High Grip

- Clamp Material: 1018 Steel
- Black Oxide Finish
- Features a double action, adjustable nose which exerts clamping pressures both downward and inward through a 45 degree angle.
- Noses have serrations for better gripping of non-finished or semi-finished workpieces
- Tapered slots prevent clamp from sliding off the workpiece during tightening
- Length "A" is calculated with nose raised 1/8"
- Clamp Washer is included with each Edge Clamp

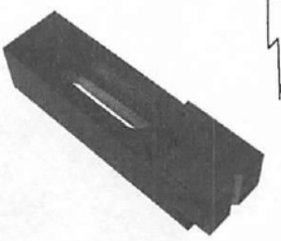

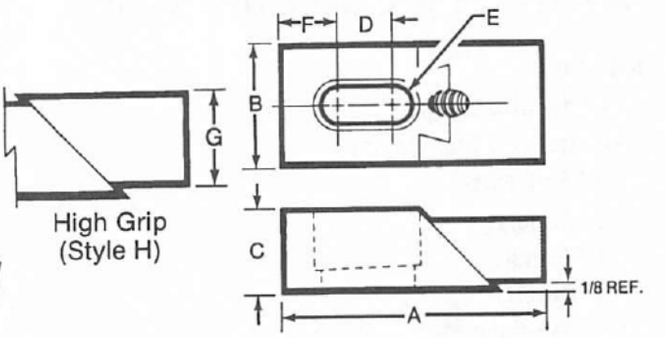

Part No.	A	Nose Style	B	C	D	Bolt Size E	F	G	Wrench Size	Wt. (lbs/100pcs)
33815	5-1/4	H	2	1-1/4	1-3/8	3/4	27/32	1-1/4	5/16	296
33811	6-1/8	H	1-1/2	1-1/4	2-1/4	1/2	1-1/16	1	1/4	240
33816	6-7/16	H	2-1/2	1-1/2	2	7/8	15/16	1-1/2	1/2	541
33814	7-3/8	H	1-1/2	1-1/4	3-5/16	1/2	1-3/16	1	1/4	286

Nuzzler® Edge Clamps: Application

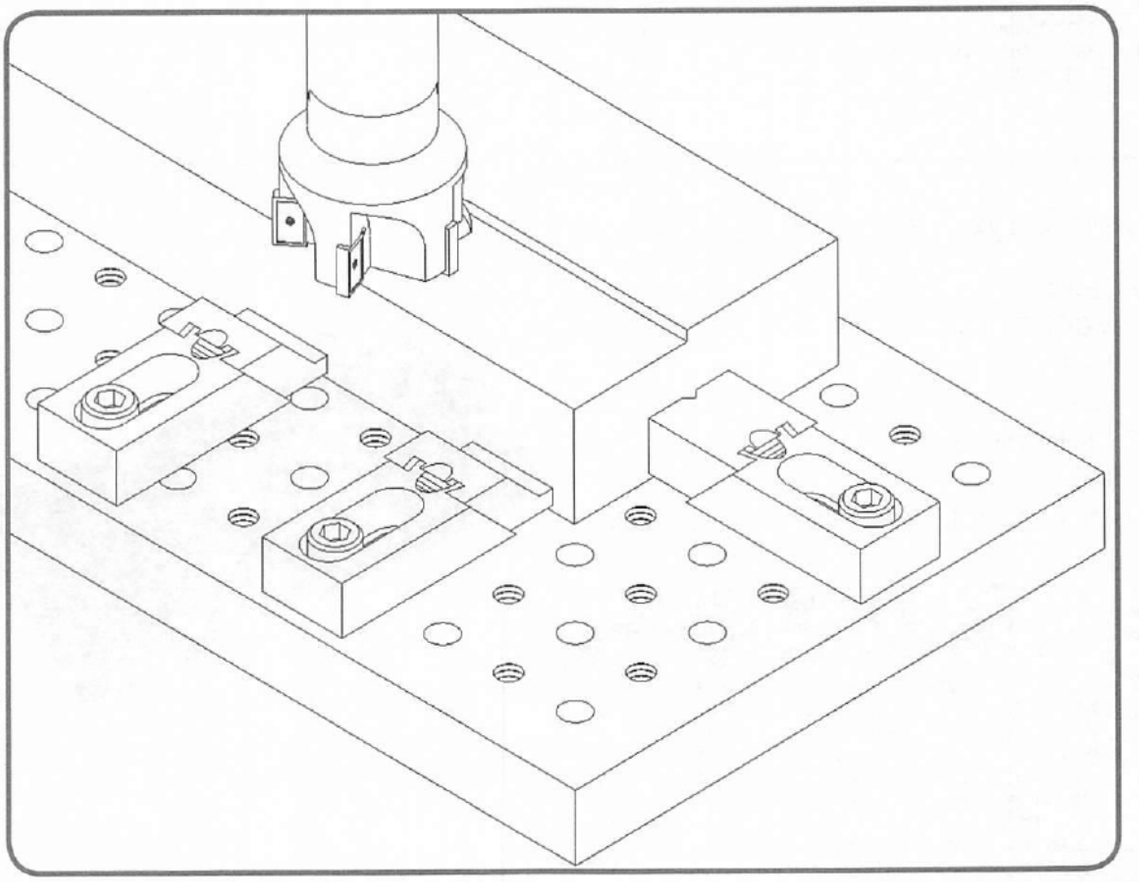

ANGIC GLOBAL SOLUTIONS

Get quote

332-1274 • ww

Angic Global Solutions 1-888-872-0690
https://www.AngicGlobal.com Sales@AngicGlobal.com

Nuzzler® Edge Clamp Kits: Small

Kit Contains:

- 4 Low Grip Clamps
- 4 Standard Grip Clamps
- 4 T-Slot Nuts
- 8 Washers
- 1 T-Handle Wrench
- 1 Holder

• For material information, see individual components

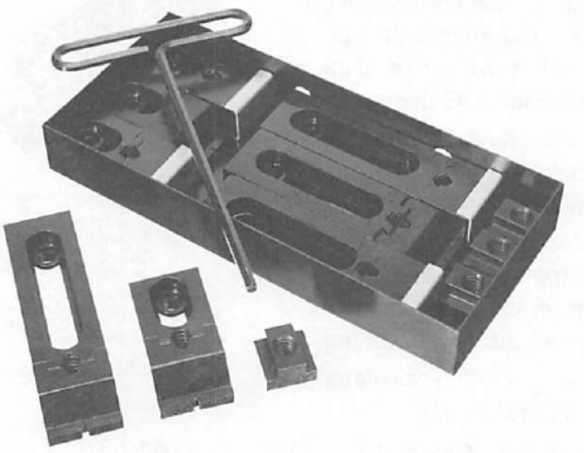

Part No.	Edge Clamps 2 Each	T-Slot Nut No.	Table Slot Size	Socket Cap Screw Size	Weight Per Kit
23800	33817-33818 33821-33822	41403T	3/8	5/16	5
23801	33817-33818 33821-33822	41433T	7/16	5/16	5
23802	33817-33818 33821-33822	41434T	1/2	5/16	5
23803	33801-33802 33803-33804	41404T	7/16	3/8	5
23804	33801-33802 33803-33804	41405T	1/2	3/8	5
23805	33801-33802 33803-33804	41406T	9/16	3/8	5
23806	33805-33806 33807-33808	41409T	9/16	1/2	10
23807	33805-33806 33807-33808	41410T	5/8	1/2	10
23808	33805-33806 33807-33808	41412T	11/16	1/2	10

Nuzzler® Edge Clamp Kits: Large

Kit Contains:

- 6 Low Grip Clamps
- 6 T-Slot Nuts
- 6 Washers
- 1 T-Handle Wrench
- 1 Holder

• For material information, see individual components

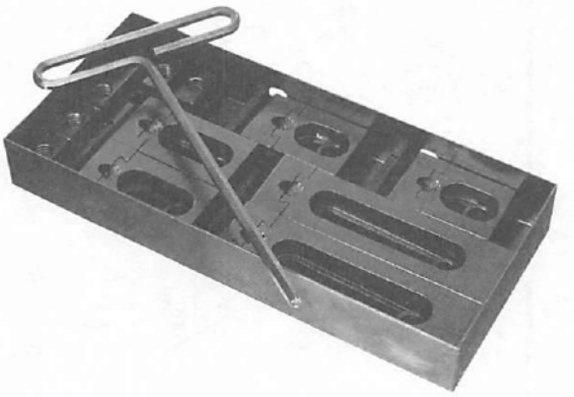

Part No.	Edge Clamps 2 Each	T-Slot Nut No.	Table Slot Size	Socket Cap Screw Size	Weight Per Kit
23809	33817-33819-33821	41403T	3/8	5/16	10
23810	33817-33819-33821	41433T	7/16	5/16	10
23811	33817-33819-33821	41434T	1/2	5/16	10
23812	33801-33890-33892	41404T	7/16	3/8	10
23813	33801-33890-33892	41405T	1/2	3/8	10
23814	33801-33890-33892	41406T	9/16	3/8	10
23815	33823-33825-33827	41409T	9/16	1/2	11
23816	33823-33825-33827	41410T	5/8	1/2	11
23817	33823-33825-33827	41412T	11/16	1/2	11

Get quote
Angic Global Solutions 1-888-872-0690
https://www.AngicGlobal.com Sales@AngicGlobal.com

Nuzzler® Edge Clamp Accessories

Aluminum Nose Cap

- Prevents damage to workpiece
- For standard grip clamps only

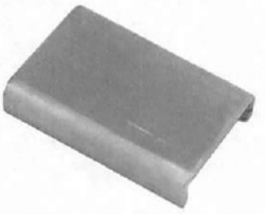

Part No.	Height	Width	Fits Clamp Number	Weight (lbs/100pcs)
33852	5/8	1	33818-33820-33822	1
33850	5/8	1-1/4	33802-33804-33891 33893	1
33851	3/4	1-1/2	33806-33808-33810 33813	1
33853	7/8	1-1/2	33824-33826-33828	

Clamp Washers



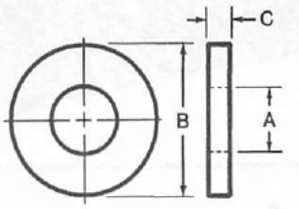

Part No.	A	B	C
33720	.410	.74	.125
33721	.530	.88	.125
33722	.780	1.25	.156
33723	.910	1.50	.156
33724	.340	.62	.125
33725	.660	1.10	.125

T-Handle Wrenches

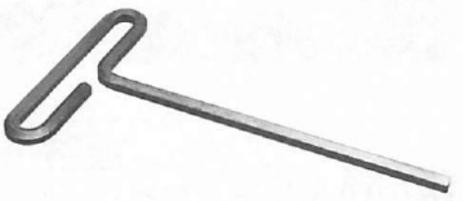

Part No.	Wrench Hex Size	Adj. Screw Size	Fits Clamp Number	Weight (lbs/100pcs)
33884	5/32	5/16-18	33817-33818-33819 33820-33821-33822	7
33880	3/16	3/8-16	33801-33802-33803 33804-33890-33891 33892-33893	12
33881	1/4	1/2-13	33805-33806-33807 33808-33809-33810 33811-33812-33813 33814-33823-33824 33825-33827 33828	20
33882	5/16	5/8-11	33815-33829	42
33883	1/2	7/8-9	33816	145

Adjustment Screws

- Alloy Steel Material
- Black Oxide Finish



Part No.	Thread	Wrench Hex Size	Fits Clamp Number	Weight (lbs/100pcs)
33865	5/16-18	5/32	33817-33818-33819 33820-33821-33822	2
33864	3/8-16	3/16	33801-33802-33803 33804-33890-33891 33892-33893	1
33861	1/2-13	1/4	33811-33814-33823 33824-33825-33826 33827-33828 33805-33806-33807 33808-33809-33810 33812-33813	2
33862	5/8-11	5/16	33815-33829	2
33863	7/8-9	1/2	33816	10

-832-1274 • w

Get quote

Angic Global Solutions 1-888-872-0690
https://www.AngicGlobal.com Sales@AngicGlobal.com

TOOLING COMPONENTS

Center Clamps

- Material: 1018 Steel
- Case Hardened, Black Oxide Finish
- See Clamp Rest below to place in center groove
- Finger grips on both sides

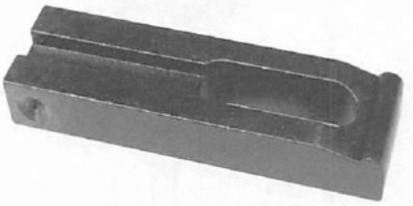

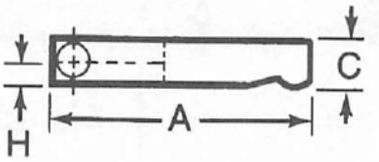

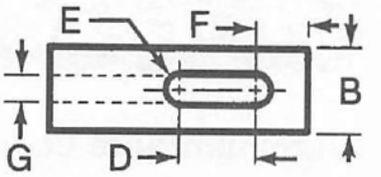

Part No.	A	B	C	D	Stud Size E	F	G	H	Wt. (lbs/100pcs)
30102	2-1/2	5/8	3/8	3/4	1/4	1/2	3/16	1/8	16
30103	4	1-1/4	5/8	1-1/4	1/2	3/4	3/8	9/32	65
30105	5	1-1/4	5/8	1-3/4	1/2	3/4	3/8	9/32	81
30106	5-1/2	1-1/4	5/8	2	1/2	3/4	3/8	9/32	93
30107	6	1-1/4	5/8	2-1/4	1/2	3/4	3/8	9/32	109
30108	4-1/2	1-1/2	3/4	1-3/8	5/8	7/8	1/2	9/32	116
30109	5	1-1/2	3/4	1-5/8	5/8	7/8	1/2	9/32	228

Clamp Rest

- Material: Low Carbon Steel
- Screw Case Hardened, Black Oxide Finish.
- Many sizes conform to TCMAI standards
- Clamp Rests can be used with Center Clamps



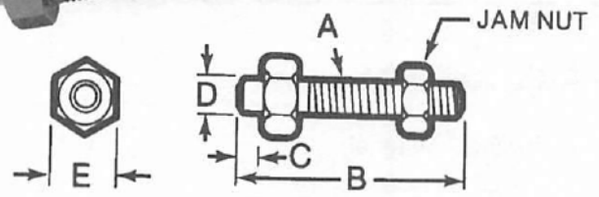

Part No.	A	B	C	D	E	Wt. (lbs/100pcs)
44001	1/4-20	1-1/4	1/8	5/32	7/16	4
44002	3/8-16	2-1/4	7/32	11/32	9/16	12
44003	1/2-13	2-3/8	1/4	11/32	11/16	41
44004	1/2-13	3-7/8	1/4	11/32	11/16	30
44006	5/8-11	3-7/8	1/4	15/32	7/8	39
44008	3/4-10	3-7/8	1/4	15/32	1-1/16	78
44009	5/16-18	1-7/8	3/16	7/32	1/2	5
44010	5/16-18	2-1/4	3/16	7/32	1/2	5.5

Clamp Supports

- Includes Washer, Spring and Shaft Collar
- Black Oxide Finish on washer only



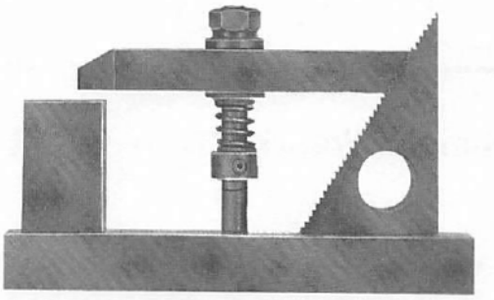

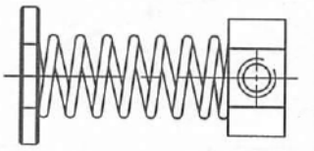

Part No.	Stud Size	Weight (lbs/kit)
50801	1/4	4
50802	5/16	4
50803	3/8	8
50804	1/2	12
50805	5/8	19
50806	3/4	26
50808	1	31

Shaft Collars

- Material: 12L14 Steel
- Zinc Plated
- Set screw draws collar to stud



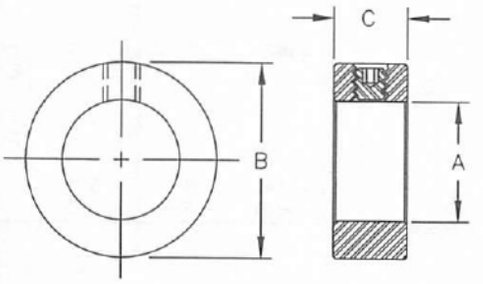

Part No.	A	B	C	Set Screw Thread	Weight (lbs/100pcs)
50901	1/4	1/2	9/32	10-32	1
50902	5/16	5/8	11/32	10-32	1
50903	3/8	3/4	3/8	1/4-20	2
50904	1/2	1	7/16	1/4-20	2
50905	5/8	1-1/8	1/2	5/16-18	6
50906	3/4	1-1/4	9/16	5/16-18	7
50908	1	1-5/8	5/8	5/16-18	3

93 -1274 • www.
Get quote
Angic Global Solutions 1-888-872-0690
https://www.AngicGlobal.com Sales@AngicGlobal.com

Plain Clamps

- Tapered nose allows clamping in small areas
- Case Hardened
- Black Oxide Finish
- Material: 1018 Steel

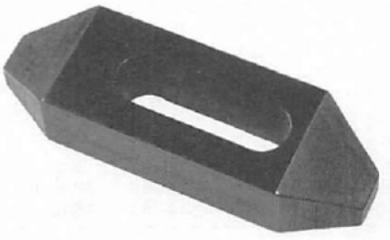

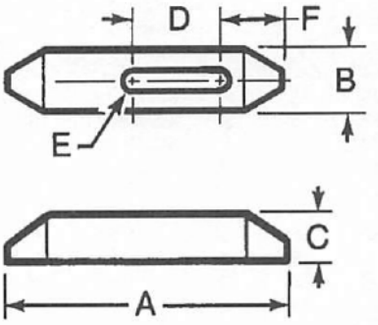

English

Part No.	A	B	C	D	Stud Size E	F	Wt. (lbs/100pcs)
30401	2-1/2	1	1/2	13/16	5/16 and 3/8	27/32	24
30402	4	1	5/8	1-7/16	5/16 and 3/8	1-1/32	48
30403	6	1-1/8	3/4	2-3/16	5/16 and 3/8	1-5/32	105
30404	2-1/2	1-1/8	1/2	11/16	1/2	29/32	24
30405	4	1-1/4	3/4	1-5/16	1/2	1-5/32	67
30406	6	1-1/4	7/8	2-1/16	1/2	1-9/32	37
30407	2-1/2	1-1/4	5/8	9/16	5/8	31/32	31
30408	4	1-1/2	3/4	1-3/16	5/8	1-9/32	83
30409	6	1-1/2	7/8	1-15/16	5/8	1-13/32	150
30410	4	1-1/2	3/4	1-1/16	3/4	1-11/32	75
30411	6	1-1/2	1	1-15/16	3/4	1-15/32	164
30412	8	1-3/4	1-1/8	2-3/16	3/4	1-29/32	321
30413	6	2	1-1/4	1-11/16	7/8 and 1	1-27/32	274
30414	8	2	1-3/8	1-15/16	7/8 and 1	2-1/32	425
30415	10	2	1-1/2	2-15/16	7/8 and 1	2-1/32	618

Metric Dimensions in millimeters

Part No.	A	B	C	D	Stud Size E	F	Wt. (lbs/100pcs)
30401M	64	25	13	21	M6-M8-M10	21	24
30402M	102	25	16	37	M6-M8-M10	26	48
30403M	152	29	19	56	M6-M8-M10	29	105
30404M	64	29	13	18	M12	23	24
30405M	102	32	16	33	M12	29	67
30406M	152	32	19	52	M12	29	37
30407M	64	32	16	14	M16	25	31
30408M	102	38	19	30	M16	31	83
30409M	152	38	22	49	M16	34	150
30410M	102	38	19	27	M20	33	75
30411M	152	38	25	49	M20	37	164
30412M	203	45	29	56	M20	48	321
30413M	152	51	32	43	M24	44	274
30414M	203	51	35	49	M24	52	425
30415M	254	51	38	75	M24	52	618

Tapped End Clamps

- Material: 1018 Steel
- Case Hardened
- Black Oxide Finish

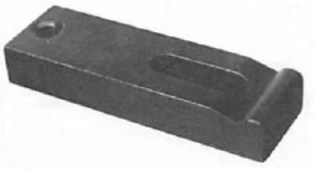

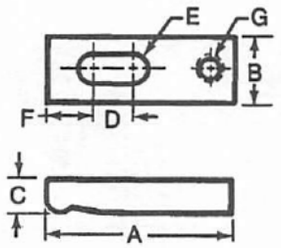

Part No.	A	B	C	D	Stud Size E	F	G	Wt. (lbs/100pcs)
30902	2	5/8	3/8	1/2	1/4	7/16	1/4-20	10
30903	2-1/2	5/8	3/8	1/2	1/4	9/16	1/4-20	14
30905	2-3/4	1	1/2	7/16	5/16	13/16	5/16-18	33
30906	3-1/4	1	1/2	13/16	5/16	7/8	5/16-18	39
30907	4	1	1/2	7/8	5/16	15/16	5/16-18	48
30908	3	1-1/4	5/8	3/4	3/8	9/16	3/8-16	55
30909	4	1-1/4	5/8	1	3/8	3/4	3/8-16	76
30910	5	1-1/4	5/8	1-1/2	3/8	3/4	3/8-16	94
30912	4	1-1/4	5/8	1	1/2	3/4	1/2-13	70
30913	4-1/2	1-1/4	5/8	1-1/2	1/2	13/16	1/2-13	76
30914	5	1-1/4	5/8	1-1/2	1/2	1-1/4	1/2-13	85
30916	6	1-1/4	5/8	1-1/2	1/2	2-1/4	1/2-13	114
30917	4-1/2	1-1/2	3/4	1	5/8	7/8	5/8-11	111
30918	5	1-1/2	3/4	1-1/2	5/8	15/16	5/8-11	120
30919	5-1/2	1-1/2	3/4	1-1/2	5/8	1-7/16	5/8-11	142
30920	6	1-1/2	3/4	1-1/2	5/8	2	5/8-11	152
30921	6	1/3/4	1	1-3/4	3/4	1-1/4	3/4-10	--
30922	7	1-3/4	1	2-1/4	3/4	1-1/4	3/4-10	--
30923	8	1-3/4	1	2-1/4	3/4	1-3/4	3/4-10	--

ANGIC GLOBAL SOLUTIONS
Get quote
-832-1274 • w
Angic Global Solutions 1-888-872-0690
https://www.AngicGlobal.com Sales@AngicGlobal.com

Serrated End Clamps

- Material: 1018 Steel
- Case Hardened
- Black Oxide Finish
- Used when a workpiece fixture incorporates Step Blocks into the design
- Serrated teeth match all TE-CO Step Blocks

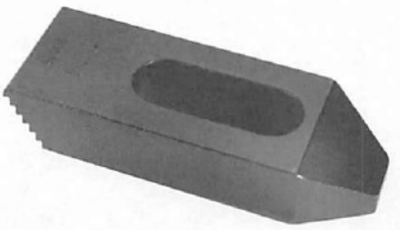

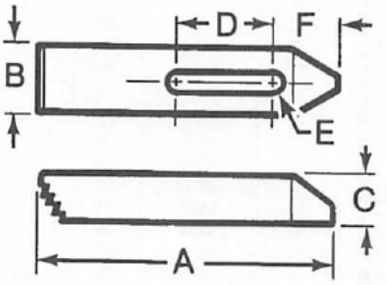

English

Part No.	A	B	C	D	Stud Size E	F	Weight (lbs/ (100pcs)
30501	2-1/2	1	1/2	13/16	1/4, 5/16 or 3/8	27/32	23
30502	4	1	5/8	1-7/16	1/4, 5/16 or 3/8	1-1/32	49
30503	6	1-1/8	3/4	2-3/16	1/4, 5/16 or 3/8	1-5/32	106
30504	2-1/2	1-1/8	1/2	11/16	1/2	29/32	27
30505	4	1-1/4	3/4	1-5/16	1/2	1-5/32	72
30506	6	1-1/4	7/8	2-1/16	1/2	1-9/32	134
30507	2-1/2	1-1/4	5/8	9/16	5/8	31/32	33
30508	4	1-1/2	3/4	1-3/16	5/8	1-9/32	87
30509	6	1-1/2	7/8	1-15/16	5/8	1-13/32	160
30510	4	1-1/2	3/4	1-1/16	3/4	1-11/32	81
30511	6	1-1/2	1	1-15/16	3/4	1-15/32	170
30512	8	1-3/4	1-1/8	2-3/16	3/4	1-29/32	330
30513	6	2	1-1/4	1-11/16	7/8 or 1	1-27/32	275
30514	8	2	1-3/8	1-15/16	7/8 or 1	2-1/32	440
30515	10	2	1-1/2	2-15/16	7/8 or 1	2-1/32	601

Metric Dimensions in millimeters

Part No.	A	B	C	D	Stud Size E	F	Wt. (lbs/100pcs)
30501M	64	25	13	21	M6-M8-M10	21	23
30502M	102	25	16	37	M6-M8-M10	26	49
30503M	152	29	19	56	M6-M8-M10	29	106
30504M	64	29	13	18	M12	23	27
30505M	102	32	16	33	M12	29	72
30506M	152	32	19	52	M12	29	134
30507M	64	32	16	14	M16	25	33
30508M	102	38	19	30	M16	31	87
30509M	152	38	22	49	M16	34	160
30510M	102	38	19	27	M20	33	81
30511M	152	38	25	49	M20	37	170
30512M	203	45	29	56	M20	48	330
30513M	152	51	32	43	M24	44	275
30514M	203	51	35	49	M24	52	440
30515M	254	51	38	75	M24	52	601

Soft Clamps

- Material: Mild Steel for easy modification
- Black Oxide Finish

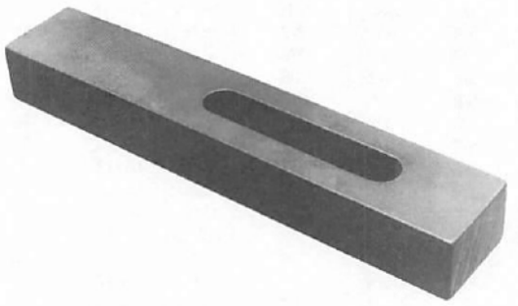

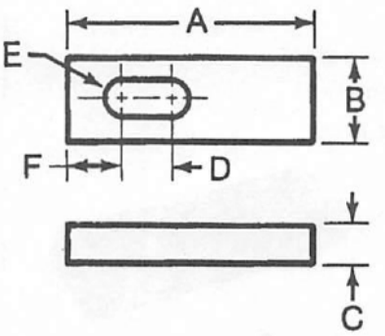

Part No.	A	B	C	D	Stud Size E	F	Wt. (lbs/100pcs)
30701	6	1-1/8	3/4	2	5/16 or 3/8	1-5/32	120
30702	6	1-1/2	3/4	2	1/2	1-7/32	160
30703	6	1-1/2	7/8	2	5/8	1-9/32	179
30704	6	1-1/2	1	2	3/4	1-11/32	194

Get quote
Angic Global Solutions 1-888-872-0690
https://www.AngicGlobal.com Sales@AngicGlobal.com

Step Clamps

- Material: 1018 Steel
- Black Oxide Finish
- Case Hardened

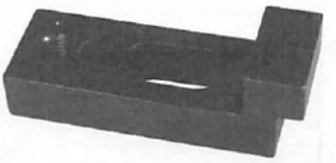

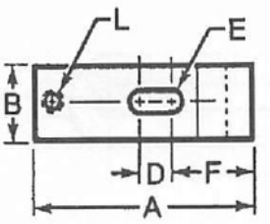

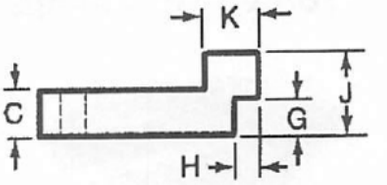

Part No.	A	B	C	D	Stud Size E	F	G	H	J	K	Thread L	Weight (lbs./100 pcs.)
30801	3-1/4	1	5/8	7/8	3/8	1-3/16	1/2	1/2	1-1/8	3/4	3/8-16	50
30802	3-5/8	1-1/8	5/8	7/8	1/2	1-7/16	1/2	1/2	1-1/8	7/8	3/8-16	66
30803	3-3/4	1-1/4	3/4	7/8	5/8	1-7/16	3/4	3/8	1-3/8	3/4	3/8-16	84
30804	4-1/4	1-1/2	3/4	3/4	3/4	1-7/8	3/4	3/8	1-3/8	13/16	1/2-13	118

Taper Nose Clamps

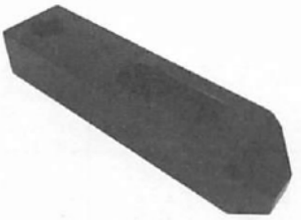

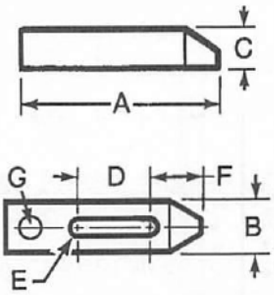

Part Number	A	B	C	D	Stud Size E	F	Thread G
30950	3-1/2	1-1/4	5/8	1/2	1/2	1-1/16	1/2-13
30951	4-1/2	1-1/4	3/4	1-1/4	1/2	1-3/16	1/2-13
30952	6	1-1/4	7/8	2	1/2	1-5/16	1/2-13
30953	4-1/2	1-1/4	5/8	1/2	5/8	1-3/16	5/8-11
30954	5	1-1/2	3/4	1-1/4	5/8	1-3/16	5/8-11
30955	7	1-1/2	7/8	2	5/8	1-5/16	5/8-11
30956	5	1-1/2	3/4	3/4	3/4	1-5/16	3/4-10
30957	6	1-1/2	1	1-1/2	3/4	1-1/2	3/4-10
30958	8	1-3/4	1-1/8	2-1/4	3/4	1-5/8	3/4-10
30959	10	2	1-1/2	2	1	2-5/8	1-8

Forged Plain Clamps

- Material: Forged high tensile carbon steel
- Black Oxide Finish



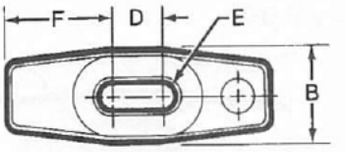

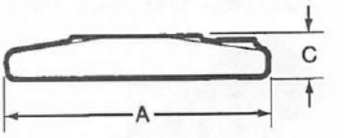

Part No.	A	B	C	D	Stud Size E	F	Wt. (lbs/100pcs)
33901	4	1-5/8	3/4	11/16	5/8 or 1/2	1-21/32	86
33902	6	1-3/4	7/8	1-3/8	5/8 or 1/2	2-5/16	173
33903	8	2-1/8	1-1/8	2	3/4	2-31/32	366
33904	10	2-1/2	1-3/8	2-3/4	7/8	3-5/8	657

Forged Tapped Plain Clamps

- Material: Forged high tensile carbon steel
- Black Oxide Finish



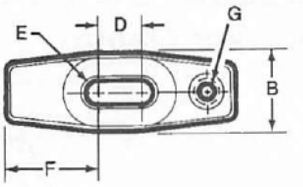

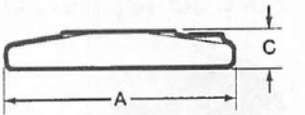

Part No.	A	B	C	D	Stud Size E	F	Tap G	Wt. (lbs/100pcs)
33911	4	1-5/8	3/4	11/16	5/8 or 1/2	1-21/32	1/2-13	82
33912	6	1-3/4	7/8	1-3/8	5/8 or 1/2	2-5/16	5/8-11	168
33913	8	2-1/8	1-1/8	2	3/4	2-31/32	3/4-10	360
33914	10	2-1/2	1-3/8	2-3/4	7/8	3-5/8	7/8-9	630

ANGIC GLOBAL SOLUTIONS
Get quote
832-1274 • w
Angic Global Solutions 1-888-872-0690
https://www.AngicGlobal.com Sales@AngicGlobal.com

TOOLING COMPONENTS

Forged "U" Clamps



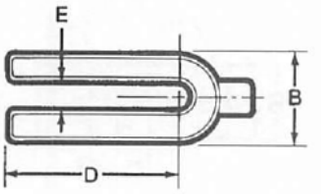

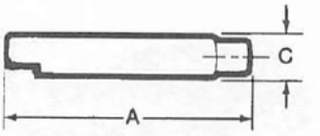

- Material: Forged high tensile carbon steel
- Black Oxide Finish

Part No.	A	B	C	D	Stud Size E	Wt. (lbs/100pcs)
33920	4	1-3/4	3/4	2-9/16	5/8 or 1/2	86
33921	6	2	7/8	4-5/16	5/8 or 1/2	193
33922	8	2-3/8	1-1/8	6	3/4	400
33923	10	2-3/4	1-1/4	7-11/16	7/8	638
33924	12	3-1/4	1-3/8	9-5/16	1	798

Forged Finger-Tip Clamps



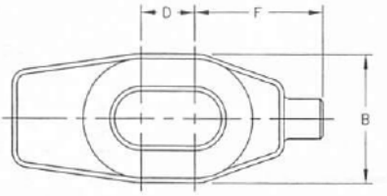

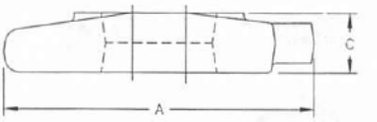

- Material: Forged high tensile carbon steel
- Black Oxide Finish

Part No.	A	B	C	D	Stud Size E	F	Wt. (lbs/100pcs)
33930	4	1-5/8	3/4	11/16	5/8 or 1/2	1-21/32	71
33931	6	1-3/4	7/8	1-1/4	5/8 or 1/2	2-3/8	151
33932	8	2-1/8	1-1/8	1-3/4	3/4	3-1/8	304

Forged Gooseneck Clamps



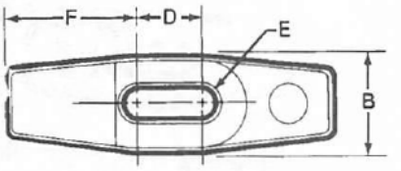

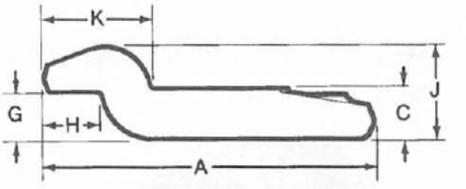

- Material: Forged high tensile carbon steel
- Black Oxide Finish

Part No.	A	B	C	D	Stud Size E	F	G	H	J	K	Wt. (lbs/100pcs)
33940	4	1-5/8	3/4	1/4	5/8 or 1/2	1-7/8	13/16	3/4	1-7/16	1-3/8	100
33941	6	1-3/4	7/8	1	5/8 or 1/2	2-1/2	15/16	1	1-9/16	1-3/4	179
33942	8	2-1/8	1-1/8	1-5/8	3/4	3-3/16	1-1/8	1-1/4	2-1/16	2-1/2	387

Forged Tapped Gooseneck Clamps



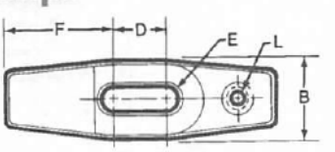

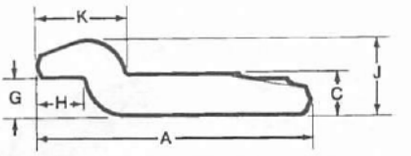

- Material: Forged high tensile carbon steel
- Black Oxide Finish

Part No.	A	B	C	D	Stud Size E	F	G	H	J	K	Tap L	Weight (lbs./100 pcs.)
33950	4	1-5/8	3/4	1/4	5/8 or 1/2	1-7/8	13/16	3/4	1-7/16	1-3/8	1/2-13	100
33951	6	1-3/4	7/8	1	5/8 or 1/2	2-1/2	15/16	1	1-9/16	1-3/4	5/8-11	179
33952	8	2-1/8	1-1/8	1-5/8	3/4	3-3/16	1-1/8	1-1/4	2-1/16	2-1/2	5/8-11	387

-1274 • www
Get quote
Angic Global Solutions 1-888-872-0690
https://www.AngicGlobal.com Sales@AngicGlobal.com

Machinable Fixture Clamps

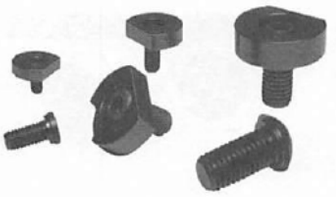

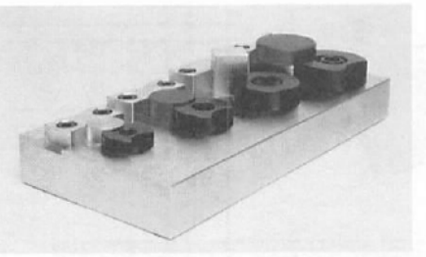

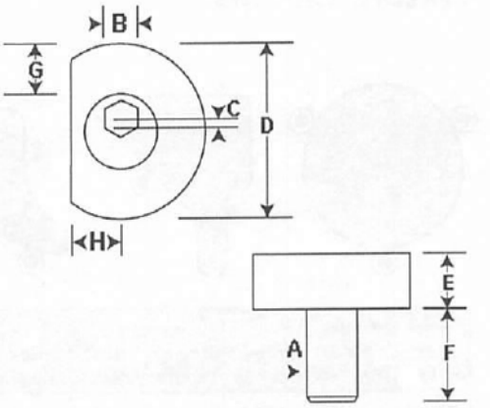

- Machinable steel washers provide more flexibility for holding round or unusual shape parts.
- Parts can be held directly to the fixture plate surface or elevated for through drilling.
- Special screw provided to hold the washer in the proper place during machining.
- Low Profile
- Made of mild steel for machinability

Part No.	Max. Holding Force Lbs.	Clamps Per Pack	A	B	C	D	E	F	G*	H***
35320	800 lbs.	4**	1/4-20	1/8	0.40	.980	.250	.470	.250	.312
35321	2000 lbs.	4**	3/8-16	3/16	0.50	1.23	.350	.710	.275	.406
35322	4000 lbs.	4**	1/2-13	5/16	.100	1.48	.450	.900	.300	.500
35323	6000 lbs.	4**	5/8-11	3/8	.100	1.73	.550	1.125	.350	.593

* "G" is the amount of machinable stock.
** Every package includes one machining screw.
***"H" is the distance from edge of workpiece to drill & tap hole.

Pitbull™ Clamps

- Extremely low bite
- Positive down force
- High resistance to rip-out
- Simple, sturdy, high quality design and components
- Available in several sizes and three styles

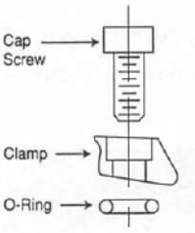

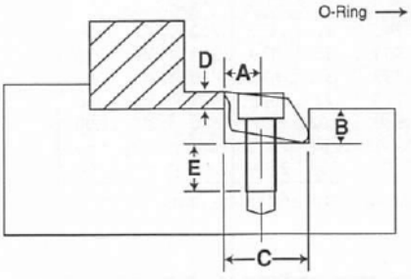

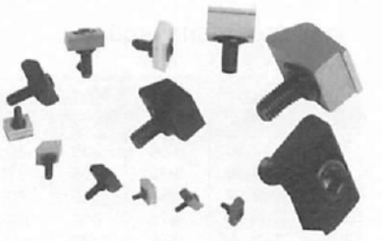

*Trademark of the Pitbull Company, Inc.

Part No.	Description	Clamp Width	Screw Size	Max. Holding Force Lbs.	Torque (in./lbs.)	Total Throw	Clamps Per Pkg.	A*	B	C	D	E
35200	Tool Steel, Knife Edge	.375	4-40	650 lbs.	16	.0075	8	.150	.140	.375	.075	.260
35201	Tool Steel, Blunt Edge	.375	4-40	650 lbs.	16	.0075	8	.150	.140	.375	.075	.260
35202	Brass, Blunt Edge	.375	4-40	200 lbs.	5	.0075	8	.150	.140	.375	.075	.220
35203	Tool Steel, Knife Edge	.500	8-32	1500 lbs.	50	.016	8	.200	.187	.500	.100	.390
35204	Tool Steel, Blunt Edge	.500	8-32	1500 lbs.	50	.016	8	.200	.187	.500	.100	.390
35205	Brass, Blunt Edge	.500	8-32	400 lbs.	25	.016	8	.200	.187	.500	.100	.340
35206	Tool Steel, Knife Edge	.750	1/4-20	3600 lbs.	200	.024	6	.300	.280	.750	.150	.570
35207	Tool Steel, Blunt Edge	.750	1/4-20	3600 lbs.	200	.024	6	.300	.280	.750	.150	.570
35208	Brass, Blunt Edge	.750	1/4-20	950 lbs.	50	.024	6	.300	.280	.750	.150	.440
35209	Tool Steel, Knife Edge	1.00	3/8-16	6000 lbs.	360	.050	4	.400	.450	1.00	.250	.710
35210	Tool Steel, Blunt Edge	1.00	3/8-16	6000 lbs.	360	.050	4	.400	.450	1.00	.250	.710
35211	Tool Steel, Knife Edge	1.50	1/2-13	12000 lbs.	1300	.075	2	.600	.640	1.50	.375	1.200
35212	Tool Steel, Blunt Edge	1.50	1/2-13	12000 lbs.	1300	.075	2	.600	.640	1.50	.375	1.200

*D: Clamp height

ANGIC GLOBAL SOLUTIONS
Get quote
332-1274 • ww
Angic Global Solutions 1-888-872-0690
https://www.AngicGlobal.com Sales@AngicGlobal.com

TOOLING COMPONENTS

Fixture Clamps

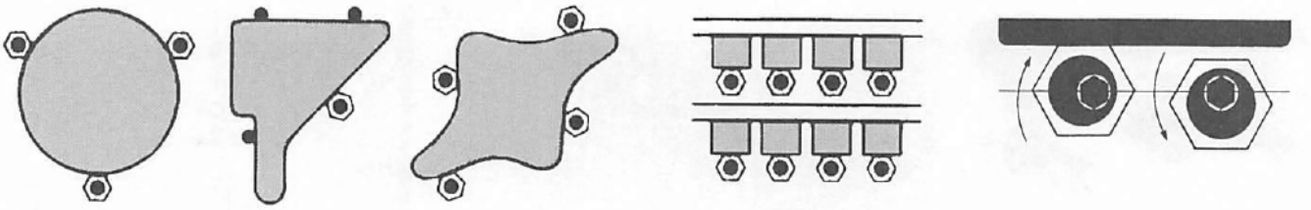

Steel Part No.	Stainless Steel Part No.	Screw Size	Thread Length	Hex Size	Hex Height	Drill & Tap Dist.*	Max. Holding Force Lbs.	Total Throw	Clamps Per Pkg.
35300	-	#8-32	3/8	5/16	.110	.150	205 lbs.	.030	10
35301	-	#10-32	3/8	1/2	.160	.250	350 lbs.	.040	10
35302	-	1/4-20	1/2	5/8	.190	.308	800 lbs.	.040	10
35303	-	5/16-24	1/2	13/16	.190	.400	750 lbs.	.040	12
35304	-	5/16-18	1/2	13/16	.190	.400	750 lbs.	.040	12
35305	-	3/8-16	3/4	13/16	.250	.400	2000 lbs.	.050	10
35306	-	1/2-13	1	1	.375	.500	4000 lbs.	.100	8
35307		5/8-11	1 1/4	1 3/16	.500	.590	6000 lbs.	.100	4
-	**35308**	1/4-20	1/2	5/8	.190	.308	800 lbs.	.040	4
-	**35309**	5/8-18	1/2	13/16	.190	.400	750 lbs.	.040	4

*NOTE: Distance from edge of workpiece to drill & tap hole.

- Hardened steel socket cap screw with an offset head and a hexagonal washer
- Low profile makes computer programming easier
- Small size allows more parts per load
- Simple design keeps cost low

Uniforce® Clamp

- A compact, economical workholding device enables you to fixture more parts on the machine table.
- This simple, efficient method of clamping workpieces will decrease your set up time, and increase your profits and production.

Part No.	Thread Size	Hex Key Size	Max. Spread	Holding Force Lbs.	Clamps Per Pkg.	A	B	C	D	E	F
35330	#2-56	5/64	.265	200 lbs.	6	.240	.27	.320	.210	.140	.250
35331	#4-40	3/32	.395	310 lbs.	6	.360	.38	.470	.310	.185	.375
35332	#8-32	9/64	.540	500 lbs.	8	.485	.57	.625	.410	.220	.500
35333	1/4-20	3/16	.800	1500 lbs.	6	.735	.77	.940	.635	.375	.750
35334	5/16-18	1/4	1.060	2000 lbs.	4	.980	1.02	1.250	.820	.500	1.00
35335	1/2-13	3/8	1.590	3500 lbs.	2	1.470	1.52	1.875	1.215	.750	1.50
35336	5/8-11	1/2	2.100	6000 lbs.	2	1.960	2.03	2.500	1.625	1.00	2.00

*"F" means the distance between workpieces for clamp clearance. Drill and tap mounting hole on the center of "F" dimension.

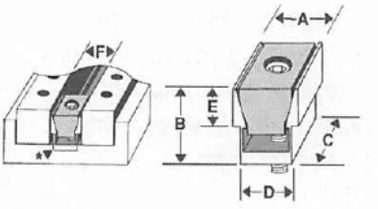

Knife Edge Clamps

- Bites into workpiece for secure clamping
- Follows contour of part for maximum contact
- Hardened steel
- For castings & rough cut stock

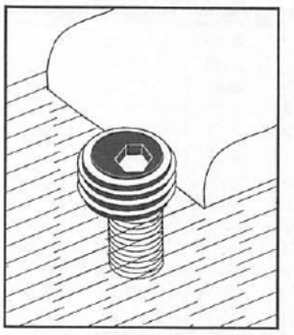

Part No.	Thread Size	Package Includes
35220	3/8-16	(8) Cam Screws + Knife Edge W
35221	1/2-13	(8) Cam Screws + Knife Edge W
35222	5/8-11	(4) Cam Screws + Knife Edge W

Get quote
2-1274 • www
Angic Global Solutions 1-888-872-0690
https://www.AngicGlobal.com Sales@AngicGlobal.com

TalonGrip™ Vise Jaws Systems

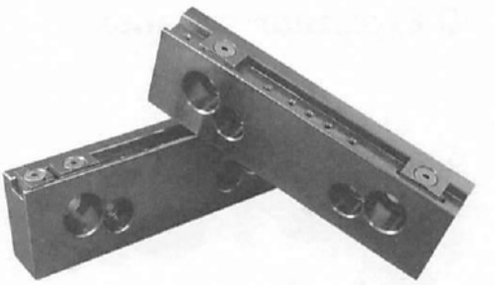

Introducing a new and innovative product that will increase the functionality of your standard 4 and 6 inch vises. TalonGrip™ is a simple bolt on system that will allow you to perform aggressive machining operations while clamping on as little as .060 of an inch.

- Ideal for small lot sizes, difficult application or prototype work when building a fixture would not be beneficial.
- Also available individually for fixturing with the Pitbull® Clamp or soft jaw applications.



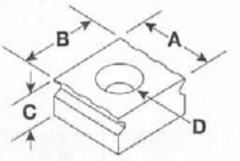

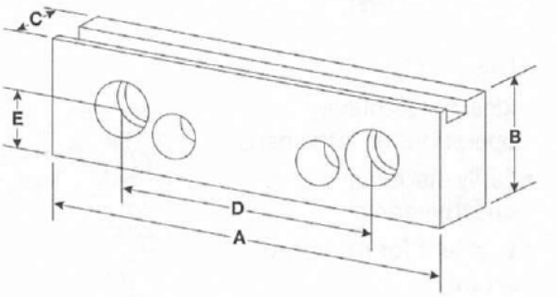

Vise Jaw Grips & Stops

Part No.	ITEM	A	B	C	D	Recommended Gripping Height	Qty. per pack
35420	Extra grips	.75	.500	.250	10-32	.060-.075	2
35425	Extra grips	.75	.500	.250	M5	.060-.075	2
35410	Extra stops	-	-	-	10-32	-	1
35415	Extra stops	-	-	-	M5	-	1

NEW

Fixture Grips

Part No.	A	B	C	D	Recommended Gripping Height	Qty. per pack
35430	.75	.750	.312	10-32	.06-.120	2
35431	.75	.750	.312	M5	.06-.120	2
35432	.75	1.000	.312	10-32	.06-.120	2
35433	.75	1.000	.312	M5	.06-.120	2
35434	1.00	1.000	.500	5/16-18	.060-.220	1
35435	1.00	1.000	.500	M8	.060-.220	1

Steel Vise Jaw Set

Part No.	Vise	A	B	C	D	E
35400	4"	4.0	1.49	1.0	2.5	.688
35401	4"/6"	6.0	1.74	1.0	2.5/3.88.	688/.94
35402	6"	8.0	1.74	1.0	3.88	.94

Set includes 4 TalonGrips, 1 stop with M5 screws

VersaGrip™ Vise Jaws Systems



Allows you the versatility of clamping standard vise work as well as providing a solution for difficult applications that would normally require fixturing or machining soft-jaws. By simply replacing your current jaws with the VersaGrip system you can securely hold odd shaped parts while machining at speeds and feeds never thought possible.

- Can accommodate a wide range of part sizes as well as holding multiple parts in a single cycle
- Hardened (52-54 RC) VersaGrip has penetrating teeth designed to bite into your workpiece preventing lateral and horizontal movement
- Will hold flame cuts parts, castings, even parts with a negative draft

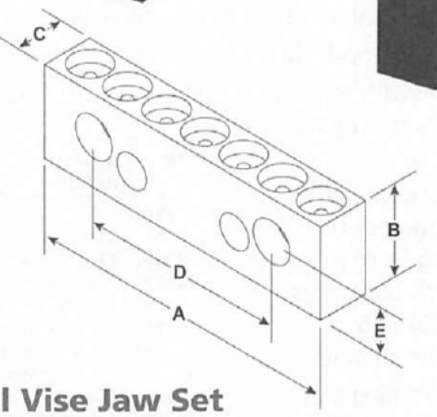



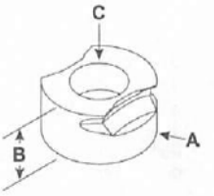

VersaGrip

Part No.	A	B	C	Recommended Gripping Height	Qty. per pack
35455	.750	.375	M5	.060-.140	2

Steel Vise Jaw Set

Part No.	Vise	A	B	C	D	E
35450	4"/6"	6.00	1.88	1.0	2.5/3.88	.688/.94
35451	6"	8.00	1.88	1.0	3.88	.94

Set includes 4 VersaGrips

ANGIC GLOBAL SOLUTIONS
Get quote
Angic Global Solutions 1-888-872-0690
https://www.AngicGlobal.com Sales@AngicGlobal.com

ID Expansion™ Clamp

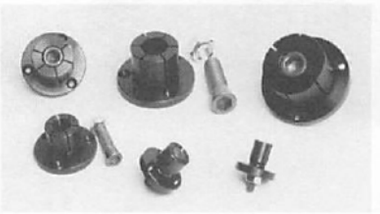

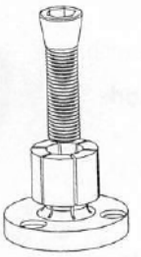

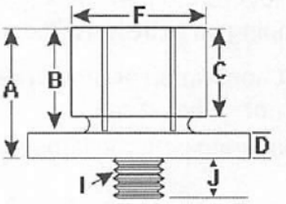

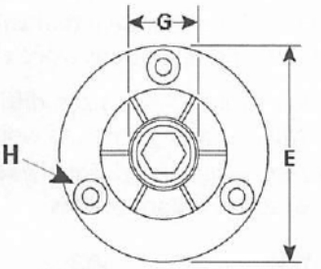

- Low profile
- Ideal for secondary operations on lathe parts
- Easily machined to size on lathe or mill
- Excellent for palletized setups
- Allows more parts per workcube or fixture plate
- Clamp body made of mild steel for machinability
- Tighten with hex key or hydraulic pull cylinders

PATENT PENDING

Part No.	Model No.	A	B	C	D	+.000 E -.002	F	G*	H**	I	J
35260	#0	.86	.63	.59	.23	1.170	.49	.28	6-32 on .825 BHC	8-32	.30
35261	#1	.98	.75	.59	.23	1.240	.56	.48	6-32 on .910 BHC	1/4-20	.50
35262	#2	.98	.75	.59	.23	1.476	.79	.53	6-32 on 1.140 BHC	5/16-18	.56
35263	#3	1.13	.88	.69	.25	1.968	1.06	.71	8-32 on 1.550 BHC	3/8-16	.71
35264	#4	1.25	1.0	.81	.25	2.205	1.39	.90	8-32 on 1.790 BHC	1/2-13	.71
35265	#5	1.56	1.25	1.06	.31	2.736	1.65	1.15	10-32 on 2.200 BHC	5/8-11	.79
35266	#6	1.56	1.25	1.06	.31	2.972	2.03	1.15	10-32 on 2.515 BHC	5/8-11	.79
35267	#7	1.79	1.48	1.27	.31	4.232	3.06	1.15	1/4-20 on 3.646 BHC	5/8-11	.79
35268	#00	.42	.30	.24	.12	.787	.29	.16	2-56 on .540 BHC	2-56	.16
35269	#8	1.79	1.48	1.27	.31	5.232	4.06	1.15	1/4-20 on 4.648 BHC	5/8-11	.79

*"G": Minimum diameter the "F" dimension can be machined or turned down to
**H: 3 mounting screws included

Machinable Uniforce Clamps

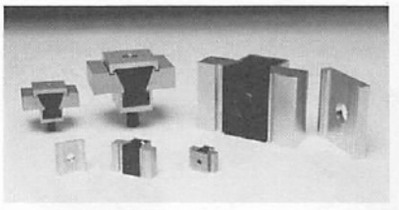

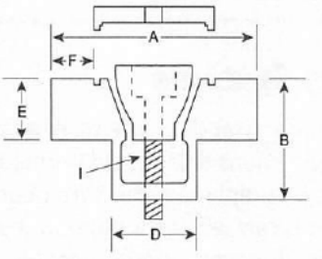

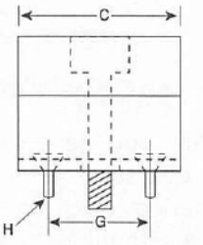

- Hold round and unusual shaped parts with ease
- Compact method allows more parts per load at a lower price than vise soft jaw
- Available with extra material on the clamping jaws so it can be machined to conform to the shape of your workpiece
- Specially designed steel wedge spreads the clamping force uniformly on both sides of the 7075-T6 aluminum channel
- Unique locking plate makes the clamp rigid while machining the jaws to your specifications, without vibration

Part No.	Description	Model	A*	B	C	D	E	F**	G	H***	I
35350	1 Clamp Assembly w/Locking Plate	500	1.125	.50	.62	.420	.25	.18	.400	2-56	8-32
35351	1 Clamp Assembly, No Locking Plate	500	1.125	.50	.62	.420	.25	.18	.400	2-56	8-32
35352	1 Clamp Assembly w/Locking Plate	750	1.50	.75	.94	.632	.37	.26	.625	6-32	1/4-20
35353	1 Clamp Assembly, No Locking Plate	750	1.50	.75	.94	.632	.37	.26	.625	6-32	1/4-20
35354	1 Clamp Assembly w/Locking Plate	1000	2.00	1.0	1.25	.820	.50	.39	.812	6-32	5/16-18
35355	1 Clamp Assembly, No Locking Plate	1000	2.00	1.0	1.25	.820	.50	.39	.812	6-32	5/16-18
35356	1 Clamp Assembly w/Locking Plate	1500	3.00	1.5	1.87	1.215	.75	.62	1.20	10-32	1/2-13
35357	1 Clamp Assembly, No Locking Plate	1500	3.00	1.5	1.87	1.215	.75	.62	1.20	10-32	1/2-13
35358	1 Clamp Assembly w/Locking Plate	2000	4.00	2.0	2.5	1.625	1.0	.80	1.625	1/4-20	5/8-11
35359	1 Clamp Assembly, No Locking Plate	2000	4.00	2.0	2.5	1.625	1.0	.80	1.625	1/4-20	5/8-11

*A: The distance needed between workpieces for clamp clearance, drill and tap mounting holes on the center of "A" dimension.
**F: The amount of machinable stock on jaws.
***Mounting Screws included.

Get quote
32-1274 • ww
Angic Global Solutions 1-888-872-0690
https://www.AngicGlobal.com Sales@AngicGlobal.com

Compact Toe Clamp

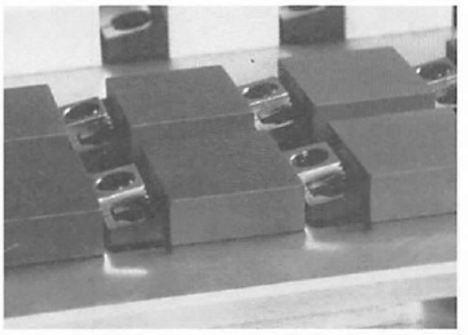

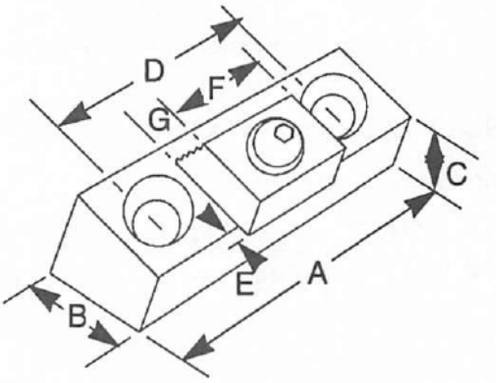

- Positive down force
- Cam action
- Clamp base should be Installed in a slot to retain location
- Mounting screws included
- Available in three sizes
- Clamps can be used in series
- Clamp base provides for higher clamping – height is determined by depth of slot

Part No.	Cam Screw	Total Distance of Movement	Key Size	Mounting Screws	A	B	C	D	E*	F	G
35230	MB-6	.050	3/16	5/16-18 x 3/4 LH	1.70	.75	.50	1.00	.090	.75	.25
35231	MB-8	.100	5/16	3/8-16 x 3/4 LH	2.12	1.00	.45	1.32	.110	1.00	.38
35232	MB-10	.100	3/8	1/2-13 x 1 1/4 SHCS	2.95	1.50	.99	2.00	.130	1.50	.50

*"E" is the distance needed between the front of the clamp base & the workpiece.

Dyna-Force Clamp

- Incredible clamping and hold down power
- Low profile, compact design
- High quality stainless steel construction
- Easy to install
- Smooth or serrated
- Available in five sizes

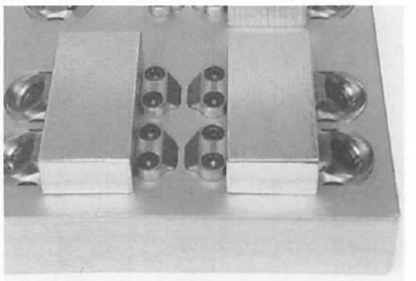

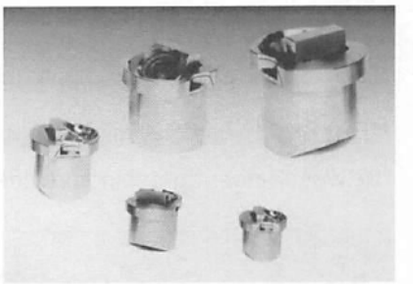

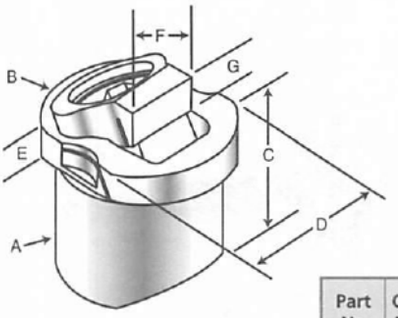

Part No.	Clamp Travel	Drive Screw	Key Size	Clamp Jaw** & Hardiness	A*	B	C	D	E	F	Min G	Opt G	Max G
35240	2.0	6mm	5mm	smooth 34RC	20.00	24.90	19.00	19.90	4.50	13.50	3.25	5.00	6.75
35241	2.0	6mm	5mm	serrated 44RC	20.00	24.90	19.00	19.90	4.50	13.50	3.25	5.00	6.75
35242	2.2	8mm	6mm	smooth 34RC	25.00	29.90	24.00	24.90	5.00	15.00	4.50	6.50	8.35
35243	2.2	8mm	6mm	serrated 44RC	25.00	29.90	24.00	24.90	5.00	15.00	4.50	6.50	8.35
35244	3.8	10mm	8mm	smooth 34RC	30.00	37.90	29.00	29.90	7.00	20.00	4.50	7.50	10.75
35245	3.8	10mm	8mm	serrated 44RC	30.00	37.90	29.00	29.90	7.00	20.00	4.50	7.50	10.75

*"A" is body diameter **Smooth jaw only will have relief cut

ANGIC GLOBAL SOLUTIONS
Get quote
332-1274 • ww
Angic Global Solutions 1-888-872-0690
https://www.AngicGlobal.com Sales@AngicGlobal.com

Bodies for Swivel Screw Clamp Systems

- Material: 12L14 Steel on all screw parts
- Black Oxide Finish
- Order pads separately – see page 45

Hand Knob Head Swivel Screw Clamps

Use when hand tightening is necessary.

Part No.	Thread A	B	C	D	Use with Small Pad	Use with Large Pad	Wt. (lbs/100pcs)
31121	1/4-20	1-15/32	3/4	1-1/8	31501	31601	5
31122	1/4-20	1-31/32	3/4	1-1/8	31501	31601	5
31131	5/16-18	1-15/32	7/8	1-1/2	31502	31602	7
31133	5/16-18	2-15/32	7/8	1-1/2	31502	31602	8
31141	3/8-16	1-7/16	1	2	31503	31603	10
31142	3/8-16	1-15/16	1	2	31503	31603	12
31144	3/8-16	2-15/16	1	2	31503	31603	14
31154	1/2-13	2-15/16	1-1/2	2-1/2	31504	31604	31
31155	1/2-13	3-15/16	1-1/2	2-1/2	31504	31604	35

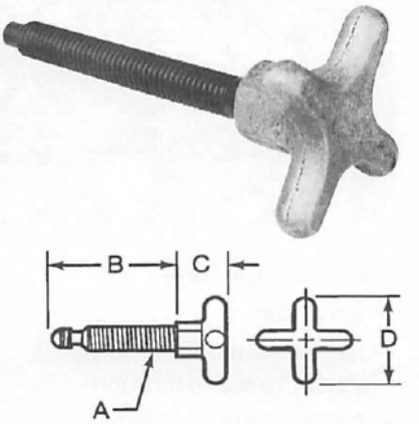

Hex Socket Head Swivel Screw Clamps

Use when space is limited and greater clamping pressures are needed.

Part No.	Thread A	B	C	Use with Small Pad	Use with Large Pad	Wt. (lbs/100pcs)
31221	1/4-20	15/32	3/32	31501	31601	*
31222	1/4-20	23/32	3/32	31501	31601	*
31223	1/4-20	31/32	3/32	31501	31601	1
31224	1/4-20	1-15/32	3/32	31501	31601	1
31231	5/16-18	23/32	5/32	31502	31602	*
31232	5/16-18	31/32	5/32	31502	31602	*
31233	5/16-18	1-15/32	5/32	31502	31602	2
31234	5/16-18	1-31/32	5/32	31502	31602	3
31241	3/8-16	11/16	3/16	31503	31603	1
31242	3/8-16	15/16	3/16	31503	31603	2
31243	3/8-16	1-7/16	3/16	31503	31603	3
31244	3/8-16	1-15/16	3/16	31503	31603	4
31252	1/2-13	15/16	1/4	31504	31604	2
31253	1/2-13	1-7/16	1/4	31504	31604	5
31255	1/2-13	2-15/16	1/4	31504	31604	6

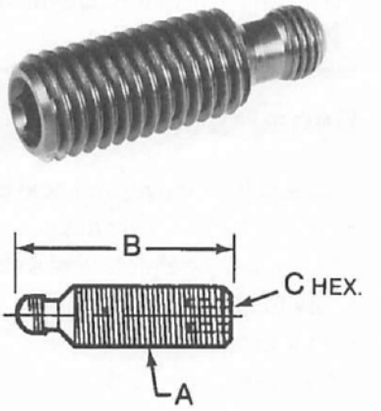

Knurled Head Swivel Screw Clamps

Use when finger tightening provides adequate pressure.

Part No.	Thread A	B	C	D	Use with Small Pad	Use with Large Pad	Wt. (lbs/100pcs)
31321	1/4-20	1-15/32	5/16	1	31501	31601	8
31322	1/4-20	1-31/32	5/16	1	31501	31601	12
31331	5/16-18	1-15/32	3/8	1-1/8	31502	31602	9
31332	5/16-18	1-31/32	3/8	1-1/8	31502	31602	13
31333	5/16-18	2-15/32	3/8	1-1/8	31502	31602	14
31341	3/8-16	1-7/16	7/16	1-1/4	31503	31603	18
31342	3/8-16	1-15/16	7/16	1-1/4	31503	31603	19
31343	3/8-16	2-7/16	7/16	1-1/4	31503	31603	20
31344	3/8-16	2-15/16	7/16	1-1/4	31503	31603	21
31354	1/2-13	2-15/16	7/16	1-1/4	31504	31604	26

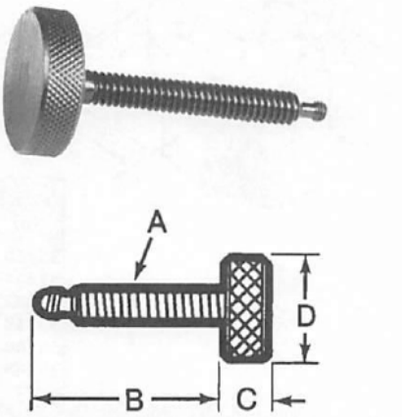

2-1274 • www
Get quote
Angic Global Solutions 1-888-872-0690
https://www.AngicGlobal.com Sales@AngicGlobal.com

Pads for Swivel Screw Clamp Systems

- Used to secure clamping of soft metal or angular surface without damaging workpiece
- Assembly includes: 1 Swivel Clamp Body and 1 Pad
- For material information, see individual components
- Material: 12L14 Steel
- Black Oxide Finish
- Left Hand internal threads



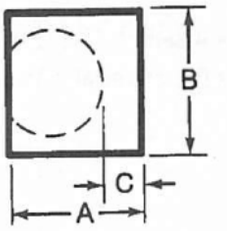

Small Pad

Part No.	Fit Body Thread Size	A	B	C	Internal Thread (left hand)	Weight (lbs/100pcs)
31501	1/4-20	0.193	3/16	1/16	8-36	1
31502	5/16-18	19/64	1/4	3/64	12-28	1
31503	3/8-16	21/64	19/64	1/16	1/4-28	1
31504	1/2-13	25/64	13/32	1/16	5/16-24	2



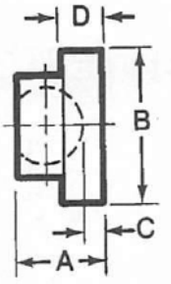

Large Pad

Part No.	Body Thread Size	A	B	C	D	Internal Thread (left hand)	Weight (lbs/100pcs)
31601	1/4-20	5/16	3/8	1/8	1/8	8-36	1
31602	5/16-18	23/64	1/2	9/64	5/32	12-28	1
31603	3/8-16	7/16	9/16	11/64	3/16	1/4-28	1
31604	1/2-13	27/64	3/4	1/8	3/16	5/16-24	2

Swivel Screw Clamp Assemblies

- Assembly includes: 1 Swivel Clamp Body and 1 Pad
- For material information, see individual components

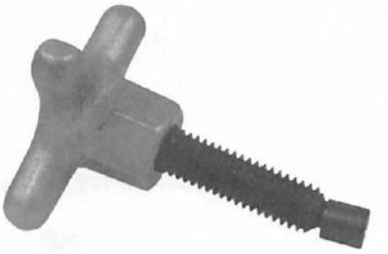

Hand Knob Head Swivel Screw Clamp Assemblies

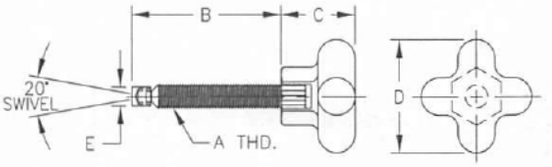

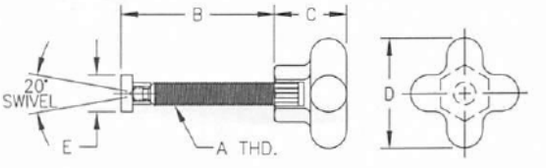

Small Pad

Part No.	A	B	C	D	E	Wt. (lbs/100pcs)
31121S	1/4-20	1.50	3/4	1-1/8	3/16	6
31122S	1/4-20	2.00	3/4	1-1/8	3/16	7
31131S	5/16-18	1.50	7/8	1-1/2	1/4	8
31133S	5/16-18	2.50	7/8	1-1/2	1/4	9
31141S	3/8-16	1.50	1	2	19/64	11
31142S	3/8-16	2.00	1	2	19/64	13
31144S	3/8-16	3.00	1	2	19/64	15
31154S	1/2-13	3.00	1-1/2	2-1/2	13/32	33
31155S	1/2-13	4.00	1-1/2	2-1/2	13/32	37

Large Pad

Part No.	A	B	C	D	E	Wt. (lbs/100pcs)
31121L	1/4-20	1.60	3/4	1-1/8	3/8	6
31122L	1/4-20	2.10	3/4	1-1/8	3/8	7
31131L	5/16-18	1.60	7/8	1-1/2	1/2	8
31133L	5/16-18	2.60	7/8	1-1/2	1/2	9
31141L	3/8-16	1.60	1	2	9/16	11
31142L	3/8-16	2.10	1	2	9/16	13
31144L	3/8-16	3.10	1	2	9/16	15
31154L	1/2-13	3.10	1-1/2	2-1/2	3/4	33
31155L	1/2-13	4.10	1-1/2	2-1/2	3/4	37

ANGIC GLOBAL SOLUTIONS
Get quote
332-1274 • ww
Angic Global Solutions 1-888-872-0690
https://www.AngicGlobal.com Sales@AngicGlobal.com

Swivel Screw Clamp Assemblies

- Assembly includes: 1 Swivel Clamp Body and 1 Pad
- For material information, see individual components

Hex Head Swivel Screw Clamp Assemblies



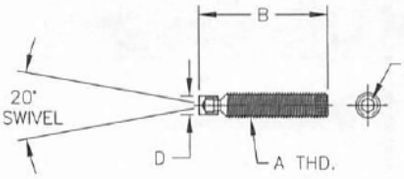

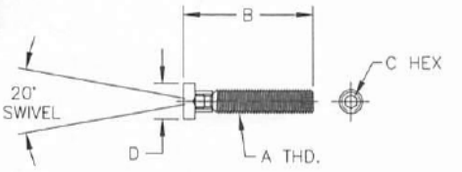

Small Pad

Part No.	A	B	C	D	Weight (lbs/100pcs)
31221S	1/4-20	0.53	3/32	3/16	1
31222S	1/4-20	0.78	3/32	3/16	1
31223S	1/4-20	1.03	3/32	3/16	2
31224S	1/4-20	1.50	3/32	3/16	2
31231S	5/16-18	0.77	5/32	1/4	1
31232S	5/16-18	1.02	5/32	1/4	1
31233S	5/16-18	1.52	5/32	1/4	3
31234S	5/16-18	2.02	5/32	1/4	4
31241S	3/8-16	0.75	3/16	19/64	2
31242S	3/8-16	1.00	3/16	19/64	3
31243S	3/8-16	1.50	3/16	19/64	4
31244S	3/8-16	2.00	3/16	19/64	5
31252S	1/2-13	1.00	1/4	13/32	4
31253S	1/2-13	1.50	1/4	13/32	7
31255S	1/2-13	3.00	1/4	13/32	10

Large Pad

Part No.	A	B	C	D	Weight (lbs/100pcs)
31221L	1/4-20	0.59	3/32	3/8	1
31222L	1/4-20	0.84	3/32	3/8	1
31223L	1/4-20	1.09	3/32	3/8	2
31224L	1/4-20	1.59	3/32	3/8	2
31231L	5/16-18	0.86	5/32	1/2	1
31232L	5/16-18	1.11	5/32	1/2	1
31233L	5/16-18	1.61	5/32	1/2	3
31234L	5/16-18	2.11	5/32	1/2	4
31241L	3/8-16	0.86	3/16	9/16	2
31242L	3/8-16	1.11	3/16	9/16	3
31243L	3/8-16	1.61	3/16	9/16	4
31244L	3/8-16	2.11	3/16	9/16	5
31252L	1/2-13	1.06	1/4	3/4	4
31253L	1/2-13	1.56	1/4	3/4	7
31255L	1/2-13	3.06	1/4	3/4	10

Knurled Head Swivel Screw Clamp Assemblies



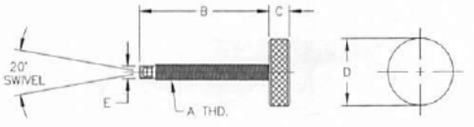

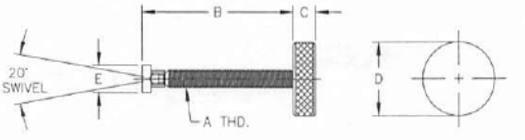

Small Pad

Part No.	A	B	C	D	E	Wt. (lbs/100pcs)
31321S	1/4-20	1.50	5/16	1	3/16	9
31322S	1/4-20	2.03	5/16	1	3/16	13
31331S	5/16-18	1.51	3/8	1-1/8	1/4	10
31332S	5/16-18	2.02	3/8	1-1/8	1/4	14
31333S	5/16-18	2.52	3/8	1-1/8	1/4	15
31341S	3/8-16	1.50	7/16	1-1/4	19/64	19
31342S	3/8-16	2.00	7/16	1-1/4	19/64	20
31343S	3/8-16	2.50	7/16	1-1/4	19/64	21
31344S	3/8-16	3.00	7/16	1-1/4	19/64	22
31354S	1/2-13	3.00	7/16	1-1/4	13/32	28

Large Pad

Part No.	A	B	C	D	E	Wt. (lbs/100pcs)
31321L	1/4-20	1.59	5/16	1	3/8	9
31322L	1/4-20	2.09	5/16	1	3/8	13
31331L	5/16-18	1.61	3/8	1-1/8	1/2	10
31332L	5/16-18	2.11	3/8	1-1/8	1/2	14
31333L	5/16-18	2.61	3/8	1-1/8	1/2	15
31341L	3/8-16	1.61	7/16	1-1/4	9/16	19
31342L	3/8-16	2.11	7/16	1-1/4	9/16	20
31343L	3/8-16	2.61	7/16	1-1/4	9/16	21
31344L	3/8-16	3.11	7/16	1-1/4	9/16	22
31354L	1/2-13	3.06	7/16	1-1/4	3/4	28

Get quote
2-1274 • www
Angic Global Solutions 1-888-872-0690
https://www.AngicGlobal.com Sales@AngicGlobal.com

Dog Point Hand Knob Screws

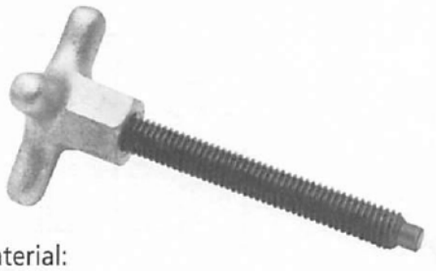

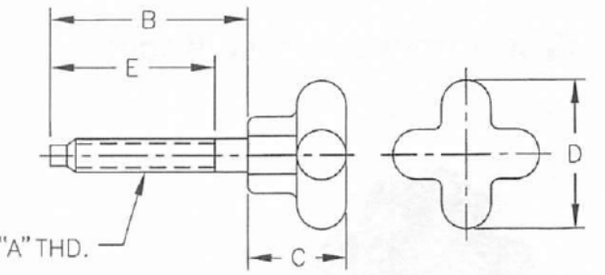

- Material:
  - Knob: Cast Aluminum
  - Stem: 12L14 Steel
- Stem only: Black Oxide Finish, Case Hardened
- Many sizes conform to TCMAI standards
- Use when hand tightening is necessary for holding or clamping
- Dog point prevents damage to end threads

Part No.	Thread A	B	C	D	E	Weight (lbs/100pcs)
31025	1/4-20	1-1/2	3/4	1-1/8	1-1/4	5
31026	1/4-20	2	3/4	1-1/8	1-3/4	5
31027	1/4-20	2-1/2	3/4	1-1/8	2-1/4	6
31031	5/16-18	2	7/8	1-1/2	1-3/4	9
31032	5/16-18	2-1/2	7/8	1-1/2	2-1/4	9
31040	3/8-16	2-1/6	1	2	1-3/4	12
31041	3/8-16	2-9/16	1	2	2-1/4	14
31042	3/8-16	3-1/16	1	2	2-3/4	15
31050	1/2-13	2-9/16	1-1/2	2-1/2	2-1/4	35
31051	1/2-13	3-1/16	1-1/2	2-1/2	2-3/4	31
31052	1/2-13	3-9/16	1-1/2	2-1/2	3-1/4	39

Dog Point Knurled Head Screws



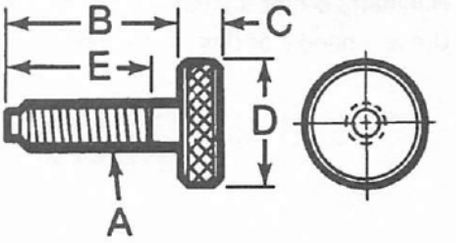

- Material: 12L14 Steel
- Black Oxide Finish
- Case Hardened
- Many sizes conform to TCMAI standards
- Use for light clamping or holding
- Knurled head allows better grip
- Dog point prevents damage to end threads
- Special sizes quoted upon request

Part No.	Thread A	B	C	D	E	Weight (lbs/100pcs)
43801	10-24	1	1/4	3/4	3/4	3
43802	10-24	1-1/2	1/4	3/4	1-1/4	3
43803	10-24	2	1/4	3/4	1-3/4	3
43804	10-32	1-1/2	1/4	3/4	1-3/8	3
43805	1/4-20	2	5/16	1	1-3/4	5
43806	1/4-20	2-1/2	5/16	1	2-1/4	9
43807	1/4-20	1-1/2	5/16	1	1-1/4	9
43808	5/16-18	1-1/2	3/8	1-1/8	1-1/4	6
43809	5/16-18	2	3/8	1-1/8	1-3/4	11
43810	5/16-18	2-1/2	3/8	1-1/8	2-1/4	13
43813	3/8-16	2	7/16	1-1/4	1-3/4	13
43811	3/8-16	2-1/2	7/16	1-1/4	2-1/4	24
43812	3/8-16	3	7/16	1-1/4	2-3/4	27
43814	1/2-13	3	7/16	1-1/4	2-3/4	28
43815	1/2-13	3-1/2	7/16	1-1/4	3-1/4	30

Quarter Turn Screws



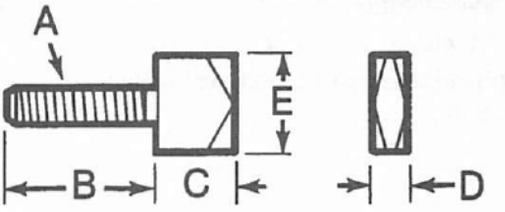

- Material: 1018 Steel
- Black Oxide Finish
- Many sizes conform to TCMAI standards
- Chamfered corners for self alignment of screw

Part No.	Thread A	B	C	D	E	Weight (lbs/100pcs)
43901	10-24	1	1/2	3/16	1/2	3
43902	10-32	1	1/2	3/16	1/2	3
43903	1/4-20	1-1/4	5/8	1/4	3/4	5
43904	5/16-18	1-1/2	3/4	5/16	1	9
43905	3/8-16	1-1/2	1	3/8	1	11

ANGIC GLOBAL SOLUTIONS
Get quote
32-1274 • ww
Angic Global Solutions 1-888-872-0690
https://www.AngicGlobal.com Sales@AngicGlobal.com

Cast Aluminum Hand Knobs



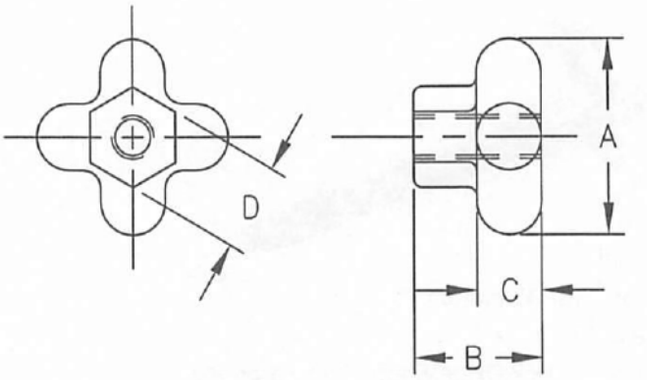

- Many sizes conform to TCMAI standards
- Available tapped through, blank, or tapped part way through
- Blank knob includes a cast center which eliminates center drilling
- Use as a handle or clamping knob

Part No.	A	B	C	D	Thread No. 1	Thread No. 2	Thread Depth	Weight (lbs/100pcs)
43305	1-1/8	3/4	3/8	1/2	1/4-20	-	Thru	3
43307	1-1/8	3/4	3/8	1/2	-	-	Blank	4
43308	1-1/8	3/4	3/8	1/2	-	1/4-20	3/8	3
43309	1-1/2	7/8	3/8	19/32	5/16-18	-	Thru	4
43311	1-1/2	7/8	3/8	19/32	-	-	Blank	5
43312	1-1/2	7/8	3/8	19/32	-	5/16-18	7/16	4
43313	2	1	3/8	11/16	3/8-16	-	Thru	6
43315	2	1	3/8	11/16	-	-	Blank	8
43316	2	1	3/8	11/16	-	3/8-16	1/2	6
43317	2-1/2	1-1/2	1/2	1-1/16	1/2-13	-	Thru	16
43319	2-1/2	1-1/2	1/2	1-1/16	-	-	Blank	19
43320	2-1/2	1-1/2	1/2	1-1/16	-	1/2-13	3/4	16
43325	3	1-3/4	5/8	1-1/4	3/4-10	-	Thru	26
43327	3	1-3/4	5/8	1-1/4	-	-	Blank	33

Plastic Ball Knobs



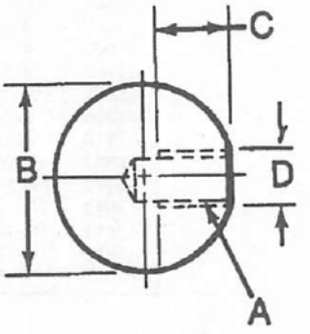

- Material: Black Plastic
- Lightweight, plastic construction keeps ball rust free
- Blank knob includes a cast center, which eliminates center drilling

Part No.	Thread A	B	C	D	Brass Insert	Weight (lbs/100pcs)
43601	10-32	3/4	5/16	3/8	YES	2
43602	1/4-20	1	7/16	1/2	YES	4
43603	1/4-28	1	7/16	1/2	YES	4
43604	5/16-18	1	7/16	1/2	YES	4
43605	5/16-24	1	7/16	1/2	YES	4
43606	3/8-16	1-3/8	1/2	5/8	YES	8
43607	3/8-24	1-3/8	1/2	5/8	YES	8
43608	1/2-13	1-3/8	5/8	5/8	YES	8
43609	1/2-20	1-3/8	5/8	5/8	YES	8
43612	1/2-13	1-7/8	5/8	3/4	YES	20
43613	1/2-20	1-7/8	5/8	3/4	YES	20
43614*	5/8-18	1-7/8	3/4	7/8	NO	20

*Molded Threads

2-1274 • ww
Get quote
Angic Global Solutions 1-888-872-0690
https://www.AngicGlobal.com Sales@AngicGlobal.com

Taper Index Plungers
Finished and Unfinished Ground



- For material information, contact TE-CO
- Many sizes conform to TCMAI standards
- Bushing not included – order separately (see below)

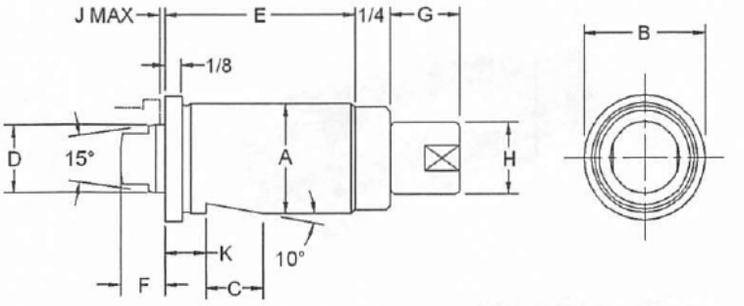

Finished Ground

Part No.	A*	B	C	D	E	F	G	H	J	K	Lbs.**	Use with Bushing No.	Wt. (lbs/100 pcs)
54900	.7518/.7515	7/8	7/16	1/2	1-3/8	5/16	1/2	1/2	3/32	5/16	22	54970	22
54902	1.1268/1.1265	1-1/4	9/16	3/4	2	3/8	3/4	3/4	1/8	3/8	48	54972	67
54904	1.5022/1.5018	1-5/8	11/16	1	2-1/4	3/8	1	1	1/8	7/16	68	54974	135

Unfinished Ground

Part No.	A*	B	C	D	E	F	G	H	J	K	Lbs.**	Use with Bushing No.	Wt. (lbs/100 pcs)
54901	.770/.765	7/8	7/16	1/2	1-3/8	5/16	1/2	1/2	3/32	5/16	22	54971	22
54903	1.145/1.140	1-1/4	9/16	3/4	2	3/8	3/4	3/4	1/8	3/8	48	54973	67
54905	1.520/1.515	1-5/8	11/16	1	2-1/4	3/8	1	1	1/8	7/16	68	54975	135

*For proper installation use nominal drill diameter
**Approximate poundage required to completely retract plunger.

Taper Index Bushings
Finished and Unfinished Ground



Finished Ground

Part No.	A*	B	C	+.002 -.000 D	Wt. (lbs/100 pcs)
54970	.7518/.7515	7/8	1/2	0.483	5
54972	1.1268/1.265	1-1/4	5/8	0.738	12
54974	1.5022/1.5018	1-5/8	3/4	0.988	25

Unfinished Ground

Part No.	A*	B	C	+.002 -.000 D	Wt. (lbs/100 pcs)
54971	.770/.765	7/8	1/2	0.483	5
54973	1.145/1.140	1-1/4	5/8	0.738	12
54975	1.520/1.515	1-5/8	3/4	0.988	25

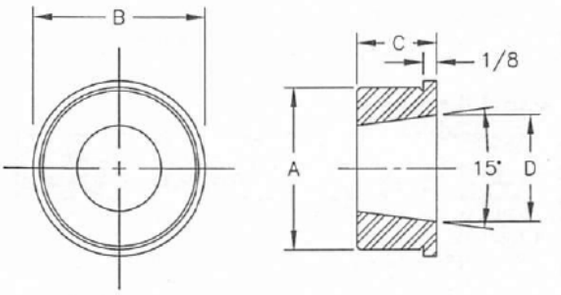

*For proper installation use nominal drill diameter

ANGIC GLOBAL SOLUTIONS
Get quote
32-1274 • ww
Angic Global Solutions 1-888-872-0690
https://www.AngicGlobal.com Sales@AngicGlobal.com

Straight Index Plungers
Finished and Unfinished Ground

- For material information, contact TE-CO
- Many sizes conform to TCMAI standards
- Bushing not included – order separately (see below)



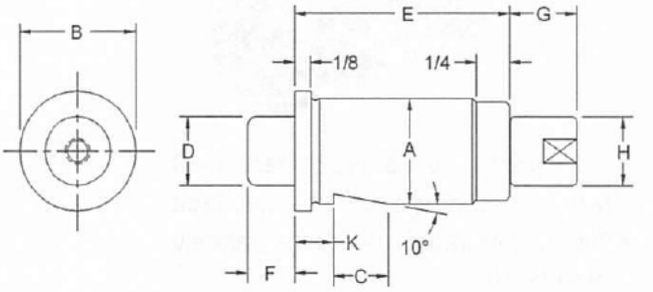

Finished Ground

Part No.	A*	B	C	D	E	F	G	H	J	K	Lbs.**	Use with Bushing No.	Wt. (lbs/100 pcs)
54910	.7518/.7515	7/8	7/16	1/2	1-3/8	23/64	1/2	1/2	1/8	5/16	22	54980	22
54912	1.1268/1.1265	1-1/4	9/16	3/4	2	33/64	3/4	3/4	1/8	3/8	55	54982	69
54914	1.5022/1.5018	1-5/8	11/16	1	2-1/4	5/8	1	15/16	1/8	7/16	90	54984	139
54916	2.0023/2.0019	2-3/16	***	1-3/8	3	27/32	1	15/16	3/16	***	150	54986	300

Unfinished Ground

Part No.	A*	B	C	D	E	F	G	H	J	K	Lbs.**	Use with Bushing No.	Wt. (lbs/100 pcs)
54911	.770/.765	7/8	7/16	1/2	1-3/8	23/64	1/2	1/2	1/8	5/16	22	54981	22
54913	1.145/1.140	1-1/4	9/16	3/4	2	33/64	3/4	3/4	1/8	3/8	55	54983	69
54915	1.520/1.515	1-5/8	11/16	1	2-1/4	5/8	1	15/16	1/8	7/16	90	54985	139
54917	2.020/2.015	2-3/16	***	1-3/8	3	27/32	1	15/16	3/16	***	150	54987	300

*For proper installation use nominal drill diameter
**Approximate poundage required to completely retract plunger
***Whistle notch not included for this part number

Straight Index Bushings
Finished and Unfinished Ground



Finished Ground

Part No.	A*	B	C	D	J	Wt. (lbs/100 pcs)
54980	.7518/.7515	7/8	1/2	1/2	1/8	4
54982	1.1268/1.1265	1-1/4	5/8	3/4	1/8	10
54984	1.5022/1.5018	1-5/8	3/4	1	1/8	22
54986	2.0023/2.0019	2-3/16	1	1-3/8	3/16	50

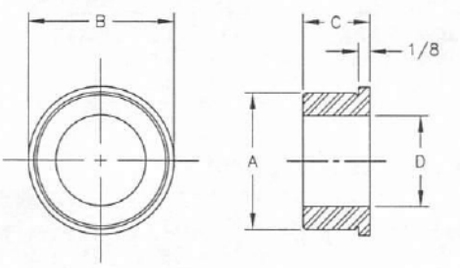

Unfinished Ground

Part No.	A*	B	C	D	J	Wt. (lbs/100 pcs)
54981	.770/.765	7/8	1/2	1/2	1/8	4
54983	1.145/1.140	1-1/4	5/8	3/4	1/8	10
54985	1.520/1.515	1-5/8	3/4	1	1/8	22
54987	2.020/2.015	2-3/16	1	1-3/8	3/16	50

*For proper installation use nominal drill diameter

Get quote
Angic Global Solutions 1-888-872-0690
https://www.AngicGlobal.com Sales@AngicGlobal.com

Rotary Cam Operated Taper Index Plungers
Finished and Unfinished Ground

- For material information, contact TE-CO
- Many sizes conform to TCMAI standards
- Bushing not included – see page 49
- Vertical cam allows for quick vertical motion



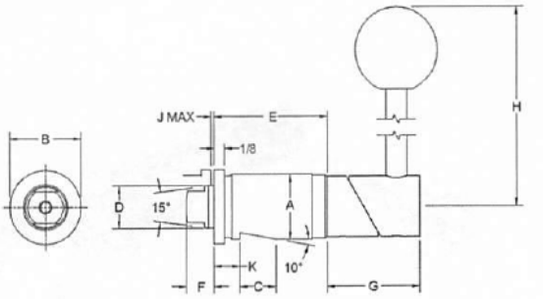

Finished Ground

Part No.	A*	B	C	D	E	F	G	H	J	K	Use with Bushing No.	Wt. (lbs/100 pcs)
54920	.7518/.7515	7/8	7/16	1/2	1-3/8	5/16	1-1/8	3	3/32	5/16	54970	35
54922	1.1268/1.1265	1-1/4	9/16	3/4	2	3/8	1-1/2	3-1/2	1/8	3/8	54972	91
54924	1.5022/1.5018	1-5/8	11/16	1	2-1/4	3/8	1-7/8	4-1/2	1/8	7/16	54974	184

Unfinished Ground

Part No.	A*	B	C	D	E	F	G	H	J	K	Use with Bushing No.	Wt. (lbs/100 pcs)
54921	.770/.765	7/8	7/16	1/2	1-3/8	5/16	1-1/8	3	3/32	5/16	54971	35
54923	1.145/1.140	1-1/4	9/16	3/4	2	3/8	1-1/2	3-1/2	1/8	3/8	54973	91
54925	1.520/1.515	1-5/8	11/16	1	2-1/4	3/8	1-7/8	4-1/2	1/8	7/16	54975	184

*For proper installation use nominal drill diameter

Vertical Cam Operated Taper Index Plungers
Finished and Unfinished Ground

- For material information, contact TE-CO
- Many sizes conform to TCMAI standards
- Bushing not included – see page 49
- Vertical cam allows for quick vertical motion



Use line art image above (Rotary style) for dimensions A-F, J, and K.

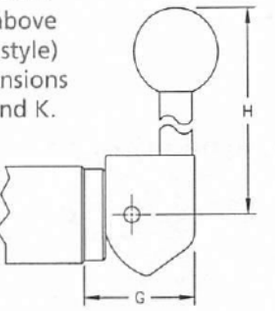

Finished Ground

Part No.	A*	B	C	D	E	F	G	H	J	K	Use with Bushing No.	Wt. (lbs/100 pcs)
54930	.7518/.7515	7/8	7/16	1/2	1-3/8	5/16	1	3	3/32	5/16	54970	32
54932	1.1268/1.1265	1-1/4	9/16	3/4	2	3/8	1-5/16	3-1/2	1/8	3/8	54972	90
54934	1.5022/1.5018	1-5/8	11/16	1	2-1/4	3/8	1-7/16	4-1/2	1/8	7/16	54974	163

Unfinished Ground

Part No.	A*	B	C	D	E	F	G	H	J	K	Use with Bushing No.	Wt. (lbs/100 pcs)
54931	.770/.765	7/8	7/16	1/2	1-3/8	5/16	1	3	3/32	5/16	54971	32
54933	1.145/1.140	1-1/4	9/16	3/4	2	3/8	1-5/16	3-1/2	1/8	3/8	54973	90
54935	1.520/1.515	1-5/8	11/16	1	2-1/4	3/8	1-7/16	4-1/2	1/8	7/16	54975	163

*For proper installation use nominal drill diameter

ANGIC GLOBAL SOLUTIONS
Get quote
332-1274 • ww
Angic Global Solutions 1-888-872-0690
https://www.AngicGlobal.com Sales@AngicGlobal.com

Rotary Cam Operated Straight Index Plungers
Finished and Unfinished Ground



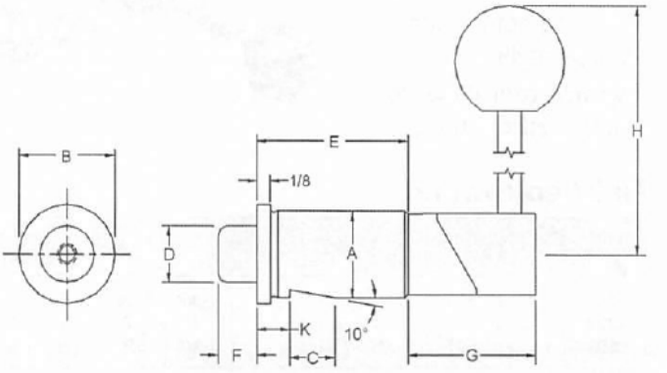

- For material information, contact TE-CO
- Many sizes conform to TCMAI standards
- Bushing not included – see page 50
- Rotary cam allows for quick horizontal motion

Finished Ground

Part No.	A*	B	C	D	E	F	G	H	J	K	Use with Bushing No.	Wt. (lbs/100 pcs)
54940	.7518/.7515	7/8	7/16	1/2	1-3/8	23/64	1-1/8	3	1/8	5/16	54980	35
54942	1.1268/1.1265	1-1/4	9/16	3/4	2	33/64	1-1/2	3-1/2	1/8	3/8	54982	92
54944	1.5022/1.5018	1-5/8	11/16	1	2-1/4	5/8	1-7/8	4-1/2	1/8	7/16	54984	185
54946	2.0023/2.0019	2-3/16	**	1-3/8	3	27/32	2-1/8	5-3/4	3/16	**	54986	418

Unfinished Ground

Part No.	A*	B	C	D	E	F	G	H	J	K	Use with Bushing No.	Wt. (lbs/100 pcs)
54941	.770/.765	7/8	7/16	1/2	1-3/8	23/64	1-1/8	3	1/8	5/16	54981	35
54943	1.145/1.140	1-1/4	9/16	3/4	2	33/64	1-1/2	3-1/2	1/8	3/8	54983	92
54945	1.520.1.515	1-5/8	11/16	1	2-1/4	5/8	1-7/8	4-1/2	1/8	7/16	54985	185
54947	2.020/2.015	2-3/16	**	1-3/8	3	27/32	2-1/8	5-3/4	3/16	**	54987	418

*For proper installation use nominal drill diameter
**Whistle notch not included for this part number

Get quote
Angic Global Solutions 1-888-872-0690
https://www.AngicGlobal.com Sales@AngicGlobal.com

Vertical Cam Operated Straight Index Plungers
Finished and Unfinished Ground



Rotary Cam Operated Straight Index Plunger line art shown here for reference only.

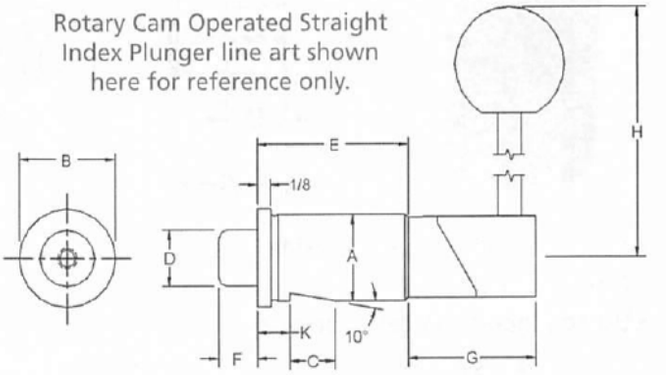

- For material information, contact TE-CO
- Many sizes conform to TCMAI standards
- Bushing not included – see page 50
- Vertical cam allows for quick vertical motion

Use line art image on pg. 56 (Rotary style) for dimensions A-F, J, and K.

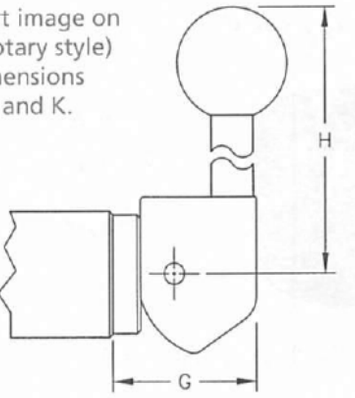

Finished Ground

Part No.	A*	B	C	D	E	F	G	H	J	K	Use with Bushing No.	Wt. (lbs/100 pcs)
54950	.7518/.7515	7/8	7/16	1/2	1-3/8	23/64	1	3	1/8	5/16	54980	33
54952	1.1268/1.1265	1-1/4	9/16	3/4	2	33/64	1-5/16	3-1/2	1/8	3/8	54982	90
54954	1.5022/1.5018	1-5/8	11/16	1	2-1/4	5/8	1-7/16	4-1/2	1/8	7/16	54984	167
54956	2.0023/2.0019	2-3/16	**	1-3/8	3	27/32	1-5/8	5-3/4	3/16	**	54986	354

Unfinished Ground

Part No.	A*	B	C	D	E	F	G	H	J	K	Use with Bushing No.	Wt. (lbs/100 pcs)
54951	.770/.765	7/8	7/16	1/2	1-3/8	23/64	1	3	1/8	5/16	54981	33
54953	1.145/1.140	1-1/4	9/16	3/4	2	33/64	1-5/16	3-1/2	1/8	3/8	54983	90
54955	1.520.1.515	1-5/8	11/16	1	2-1/4	5/8	1-7/16	4-1/2	1/8	7/16	54985	167
54957	2.020/2.015	2-3/16	**	1-3/8	3	27/32	1-5/8	5-3/4	3/16	**	54987	354

*For proper installation use nominal drill diameter
**Whistle notch not included for this part number

ANGIC GLOBAL SOLUTIONS
Get quote
332-1274 • ww
Angic Global Solutions 1-888-872-0690
https://www.AngicGlobal.com Sales@AngicGlobal.com

Tapped Jig Feet



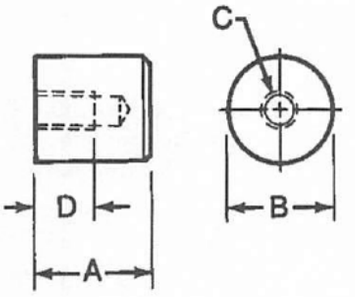

- Material: 1018 Steel, Black Oxide Finish
- Case Hardened
- Use to support or locate workpiece.
- Use to raise jigs and fixures off of machine table

Part No.	+.001 -.000 A	B	C	D	Wt. (lbs/100 pcs)
44150	3/8	5/8	10-32	1/4	3
44151	1/2	5/8	10-32	1/4	4
44152	3/4	5/8	10-32	5/16	6
44153	1	5/8	10-32	5/16	8
44154	1/2	7/8	5/16-18	5/16	8
44155	3/4	7/8	5/16-18	1/2	12
44156	1	7/8	5/16-18	1/2	16
44157	3/4	1-1/4	3/8-16	9/16	24
44158	1	1-1/4	3/8-16	9/16	32
44159	1-1/2	1-1/4	3/8-16	9/16	49

Button Jig Feet



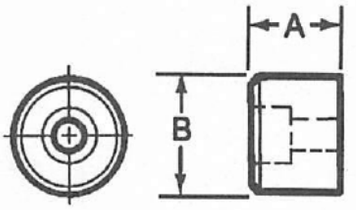

Socket Head Cap Screw
* Flat Head Cap Screw

- Material: 12L14 Steel, Black Oxide Finish
- Case Hardened
- Many sizes conform to TCMAI standards.
- Screw not furnished
- Length dimension is finished ground
- Use to locate or support workpiece
- Use to raise jigs and fixures off machine table

Part No.	+.001 -.000 A	B	Screw Type & Size	Wt. (lbs/100 pcs)
44103	3/8	1/2	10-32*	1
44104	1/2	1/2	10-32*	2
44105	1/4	5/8	10-32*	1
44107	3/8	5/8	1/4#	2
44109	1/2	5/8	1/4#	3
44110	5/8	5/8	1/4#	4
44111	3/4	5/8	1/4#	5
44113	1	5/8	1/4#	7
44115	1/2	7/8	5/16#	6
44117	3/4	7/8	5/16#	10
44118	1	7/8	5/16#	13
44119	3/4	1-1/4	3/8#	21
44120	1	1-1/4	3/8#	29
44121	1-1/2	1-1/4	3/8#	44
44122	2	1-1/4	3/8#	60

Pre-Set Buttons



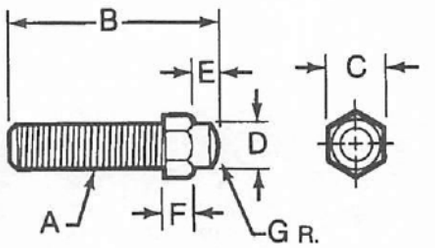

- Material: 12L14 Steel
- Black Oxide Finish
- Case Hardened
- Many sizes conform to TCMAI standards

Part No.	A	B	C	D	E	F	G	Wt. (lbs/100pcs)
44290	10-32	1	1/4	3/16	1/8	1/8	1/8	1
44291	14/-28	1-1/2	3/8	1/4	3/16	3/16	3/16	2
44292	3/8-24	2	1/2	3/8	1/4	1/4	1/4	6
44293	1/2-20	2-1/2	5/8	1/2	5/16	5/16	5/16	13
44294	5/8-18	3	3/4	5/8	3/8	3/8	3/8	25

2-1274 • ww
Get quote
Angic Global Solutions 1-888-872-0690
https://www.AngicGlobal.com Sales@AngicGlobal.com

Plain Fixture Keys

- Material: 1018 Steel
- Black Oxide Finish
- Case Hardened
- Many sizes conform to TCMAI standards
- Precision Ground
- Use to accurately align fixture on machine table
- Special sizes quoted upon request

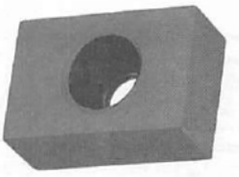

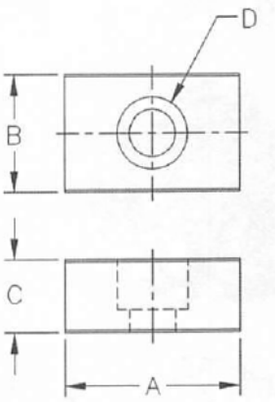

Part No.	A	+.0000 -.0005 B	C	Socket Head Screw D	Wt. (lbs/100 pcs)
44501	3/4	.5000	1/2	1/4	4
44502	3/4	.5625	1/2	1/4	5
44503	3/4	.625	1/2	5/16	6
44504	1	.6875	1/2	5/16	8
44505	1-1/4	.750	1/2	5/16	11
44506	1-1/4	.8125	1/2	5/16	13

Toggle Pads



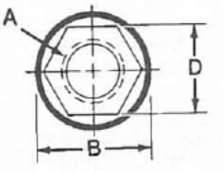

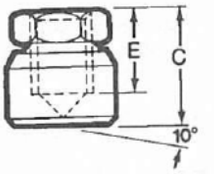

- Material: 12L14 Steel
- Black Oxide Finish or Zinc Plate Yellow Chromate Finish
- Case Hardened
- Many sizes conform to TCMAI standards.
- Pads swivel 10 degrees from vertical in any direction
- Assures positive gripping
- Use when high clamping pressures are required

Black Part No.	Yellow Part No.	Thread A	B	C	D	E	Weight (lbs/100pcs)
44302	**44362**	1/4-20	5/8	5/8	1/2	13/32	4
44303	**44363**	5/16-18	11/16	11/16	9/16	7/16	5
44304	**44364**	3/8-16	3/4	3/4	5/8	1/2	6
44305	**44365**	1/2-13	7/8	1	3/4	17/32	10
44306	**44366**	5/8-11	1	1-1/16	7/8	9/16	16
44307	**44367**	3/4-10	1-1/4	1-5/16	1-1/16	3/4	25
44308	**44368**	1-8	1-5/8	1-11/16	1-3/8	1	60

ANGIC GLOBAL SOLUTIONS
Get quote
832-1274 • w
Angic Global Solutions 1-888-872-0690
https://www.AngicGlobal.com Sales@AngicGlobal.com

Leveling Pads



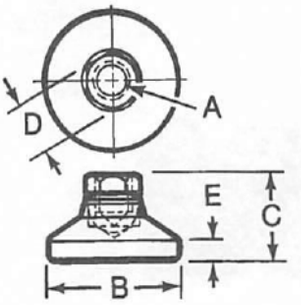

- Material: 12L14 Steel
- Black Oxide Finish
- Case Hardened
- Many sizes conform to TCMAI standards
- Pads swivel 10 degrees from vertical in any direction
- Large pad diameter provides solid support
- Use as a foot for machine tools, branches, electronic racks, etc.
- Special sizes quoted upon request

Part No.	Thread A	B	C	D	E	Load Limits	Weight (lbs/100pcs)
44401	3/8-16	1-1/4	7/8	5/8	3/16	3750 lbs.	14
44402	1/2-13	1-7/8	1-1/8	3/4	1/4	5000 lbs.	47
44403	5/8-11	2-1/2	1-1/4	7/8	5/16	6000 lbs.	67
44404	3/4-10	3	1-1/2	1-1/16	1/2	7200 lbs.	138

Zinc Plated Leveling Pads



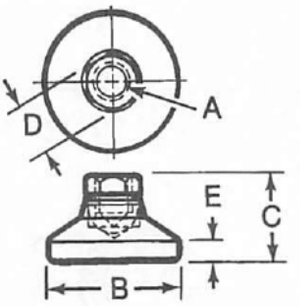

- Material: 12L14 Steel with Zinc Plate Yellow Chromate Finish
- Many sizes conform to TCMAI standards
- Pads swivel 10 degrees from vertical in any direction
- Large pad diameter provides solid support
- Use as a foot for machine tools, benches, electronic racks, etc.
- Special sizes quoted upon request

Part No.	Thread A	B	C	D	E	Load Limits	Weight (lbs/100pcs)
44431	3/8-16	1-1/4	7/8	5/8	3/16	3750 lbs.	14
44432	1/2-13	1-7/8	1-1/8	3/4	1/4	5000 lbs.	47
44433	5/8-11	2-1/2	1-1/4	7/8	5/16	6000 lbs.	67
44434	3/4-10	3	1-1/2	1-1/16	1/2	7200 lbs.	138

Leveling Pad & Stud Assembly

- Material: 12L14 Steel with Zinc Plating
- Zinc coating deters rust
- Integral stud and hardened ball swivels 10 degrees from vertical in any direction.
- Swivel action facilitates leveling of machine tools, benches, electronic racks, etc. – even on rough surfaces



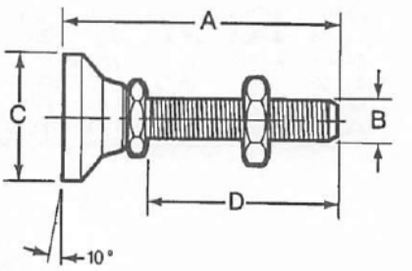

Part No.	A	Thread B	C	D	Load Limits	Weight (lbs/100pcs)
44450	2-7/8	3/8-16	1-1/4	2-1/32	3750 lbs.	22
44451	3-1/8	1/2-13	1-7/8	1-31/32	5000 lbs.	54
44452	3-1/4	5/8-11	2-1/2	1-15/16	6000 lbs.	102
44453	3-1/2	3/4-10	3	1-31/32	7200 lbs.	184

Get quote
Angic Global Solutions 1-888-872-0690
https://www.AngicGlobal.com Sales@AngicGlobal.com

Ball Bearing Parallels

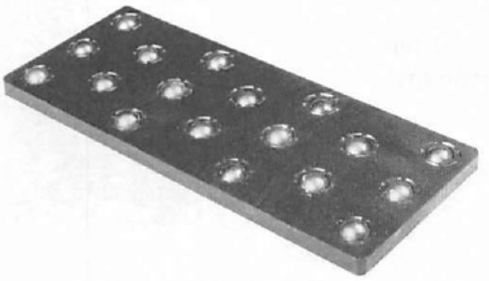

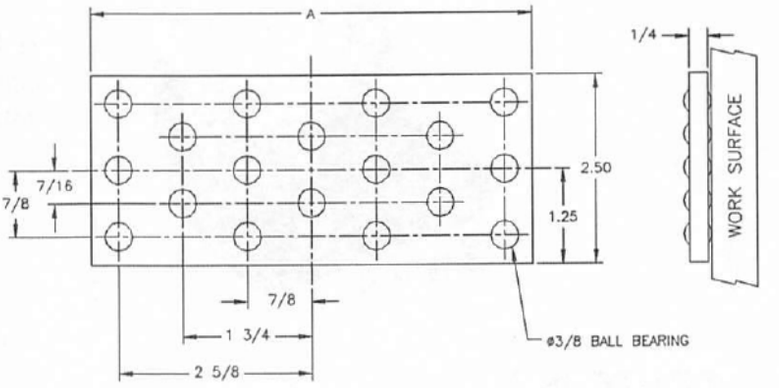

- Material:
  - Plate: 1018 Steel
  - Balls: Grade 200 Carbon Steel
- Black oxide finish on plate
- Designed to ease movement of heavy loads when machining
- Load capacity per ball: 3,000 lbs.
- All plates are 1/4" thick x 2-1/2" wide
- Balls are 3/8" diameter

Part No.	Length	Number of Balls per Plate	Wt. (lbs/100 pcs)
50201	6	18	105
50202	12	36	209
50203	18	54	313

Ball Bearing Parallel Kits

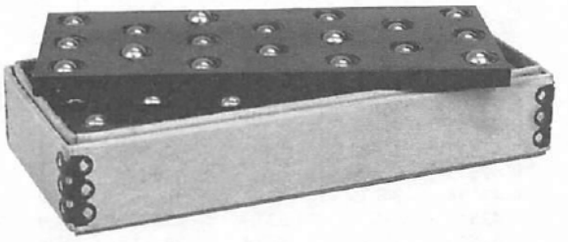

Part No.	Plate No.	Number of Plates per Kit	Wt. (lbs/kit)
50204	50201	4	4.25
50205	50202	2	6.39

- Material:
  - Plate: 1018 Steel
  - Balls: Grade 200 Carbon Steel
- Black oxide finish on plate
- Designed to ease movement of heavy loads when machining
- Load capacity per ball: 3,000 lbs.
- All plates are 1/4" thick x 2-1/2" wide
- Balls are 3/8" diameter

ANGIC GLOBAL SOLUTIONS
Get quote
832-1274 • w
Angic Global Solutions 1-888-872-0690
https://www.AngicGlobal.com Sales@AngicGlobal.com

TOOLING COMPONENTS

TE-CO Threaded Insert Kits



Part No.	Quantity of Inserts	Insert Part No.	Internal Thread	External Thread
Coarse Thread/Fine Thread – Steel				
42370	10	42313	10-24	3/8-16
	10	42314	1/4-20	7/16-14
	10	42315	5/16-18	1/2-13
	10	42316	3/8-16	9/16-12
	6	42318	1/2-13	3/4-10
42371	6	42318	1/2-13	3/4-10
	7	42320	5/8-11	7/8-9
	7	42322	3/4-10	1/8
	2	42323	1-8	1 3/8-12
42372	10	42324	10-32	3/8-16
	10	42325	1/4-28	7/16-14
	10	42326	5/16-24	1/2-13
	10	42327	3/8-24	9/16-12
	6	42329	1/2-20	3/4-10
Metric Internal/U.S. External – Steel				
42373	10	42332	M6 x 1.0	3/8-16
	10	42333	M8 x 1.25	1/2-13
	10	42334	M10 x 1.5	9/16-12
	6	42335	M12 x 1.75	3/4-10

Part No.	Quantity of Inserts	Insert Part No.	Internal Thread	External Thread
Metric Internal/Metric External – Steel				
42374	10	42338	M3 x 0.5	M6 x 1.0
	10	42339	M4 x 0.7	M8 x 1.25
	10	42340	M5 x 0.8	M8 x 1.25
	10	42341	M6 x 1.0	M10 x 1.5
	10	42342	M8 x 1.25	M12 x 1.75
42375	10	42342	M8 x 1.25	M12 x 1.75
	10	42343	M10 x 1.5	M16 x 2.0
	8	42344	M12 x 1.75	M16 x 2.0
	5	42345	M16 x 2.0	M24 x 3.0
303 Stainless Steel, Passivated				
42376	10	42346	10-24	3/8-16
	10	42347	1/4-20	7/16-14
	10	42348	5/16-18	1/2-13
	10	42349	3/8-16	9/16-12
	6	42351	1/2-13	3/4-10
42377	10	42352	10-32	3/8-16
	10	42353	1/4-28	7/16-14
	10	42354	5/16-24	1/2-13
	10	42355	3/8-24	9/16-12
	6	42357	1/2-20	3/4-10

E-Z Lok Thin Wall Thread Repair Kit

Kit Includes:
Inserts, drill, tap and installation tool



Part No.	Quantity of Inserts	Insert Part No.	Internal Thread	External Thread
42530	20	42511	10-24	5/16-18
42531	20	42517	10-32	5/16-18
42532	20	42512	1/4-20	3/8-16
42533	20	42518	1/4-28	3/8-16
42534	20	42513	5/16-18	7/16-14
42535	20	42519	5/16-24	7/16-14
42536	20	42514	3/8-16	1/2-13
42537	20	42520	3/8-24	1/2-13
42538	20	42515	7/16-14	9/16-12
42539	20	42521	7/16-20	9/16-12
42540	20	42516	1/2-13	5/8-11
42541	20	42522	1/2-20	5/8-11
42542	20	42523	M4-0.7	5/16-18
42543	20	42524	M5-0.8	5/16-18
42544	20	42525	M6-1.0	3/8-16
42545	20	42526	M8-1.25	7/16-14
42546	20	42527	M10-1.5	1/2-13
42547	20	42528	M12-1.75	5/8-11

Thin Wall Inserts

Part No.	Internal Thread	Tap Drill Size	Tap Size External Thread	Length
Coarse Thread				
42511	10-24	I	5/16-18	.312
42512	1/4-20	Q	3/8-16	.375
42513	5/16-18	X	7/16-14	.437
42514	3/8-16	29/64	1/2-13	.500
42515	7/16-14	33/64	9/16-12	.560
42516	1/2-13	37/64	5/8-11	.620
Fine Thread				
42517	10-32	I	5/16-18	.312
42518	1/4-28	Q	3/8-16	.375
42519	5/16-24	X	7/16-14	.437
42520	3/8-24	29/64	1/2-13	.500
42521	7/16-20	33/64	9/16-12	.560
42522	1/2-20	37/64	5/8-11	.620
Metric Thread				
42523	**M4-0.7**	I	5/16-18	.312
42524	**M5-0.8**	I	5/16-18	.312
42525	**M6-1.0**	Q	3/8-16	.375
42526	**M8-1.25**	X	7/16-14	.437
42527	**M10-1.5**	29/64	1/2-13	.500
42528	**M12-1.75**	37/64	5/8-11	.620

93 ANGIC Get quote -1274 • www Angic Global Solutions 1-888-872-0690
https://www.AngicGlobal.com Sales@AngicGlobal.com

TE-CO Threaded Inserts



- Automatic self-locking external thread with use-activated adhesive
- Will not back out or vibrate loose
- Immediately on installation, micro-encapsulated epoxy molecules begin to set, and the newly installed insert can be fastened to within minutes. Adhesive continues to cure overnight until completely set
- Adhesive seals against liquids and gases to pressures of 6,000 psi and bonds to virtually all metals

Part No.	Internal Thread	Tap Drill Size	Tap Size External Thread	Length
Coarse Thread/Fine Thread - Steel				
42310	4-40	5/32	10/32	.250
42311	6-32	#7	1/4-20	.280
42312	8-32	F	5/16-18	.290
42313	10-24	5/16	3/8-16	.406
42314	1/4-20	23/64	7/16-14	.437
42315	5/16-18	27/64	1/2-13	.484
42316	3/8-16	31/64	9/16-12	.515
42317	7/16-14	17/32	5/8-11	.656
42318	1/2-13	21/32	3/4-10	.656
42319	9/16-12	21/32	3/4-10	.656
42320	5/8-11	49/64	7/8-9	.687
42321	5/8-11	49/64	7/8-9	1.125
42322	3/4-10	7/8	1-8	.781
42323	1-8	1-9/32	1-3/8-12	1.250
42324	10/32	5/16	3/8-16	.406
42325	1/4-28	23/64	7/16-14	.437
42326	5/16-24	27/64	1/2-13	.484
42327	3/8-24	31/64	9/16-12	.515
42328	7/16-20	17/32	5/8-11	.656
42329	1/2-20	21/32	3/4-10	.656
42330	5/8-18	49/64	7/8-9	.687
42331	3/4-16	7/8	1-8	.781
Extra Heavy Wall - Steel				
42358	1/4-20	27/64	1/2-13	.484
42359	5/16-18	31/64	9/16-12	.515
42360	3/8-16	17/32	5/8-11	.656
42361	1/2-13	49/64	7/8-9	.687
42362	5/8-11	7/8	1-8	.781
Metric Internal/U.S. External - Steel				
42332	M6 x 1.0	5/16	3/8-16	.406
42333	M8 x 1.25	27/64	1/2-13	.484
42334	M10 x 1.50	31/64	9/16-12	.515
42335	M12 x 1.75	21/32	3/4-10	.656
42336	M14 x 2.0	49/64	7/8-9	.656
42337	M16 x 2.0	7/8	1-8	.781
Metric Internal/Metric External - Steel				
42338	M3 x 0.5	5.1mm	M6 x 1.0	6.5mm
42339	M4 x 0.7	6.9mm	M8 x 1.25	7.5mm
42340	M5 x 0.8	6.9mm	M8 x 1.25	7.5mm
42341	M6 x 1.0	8.6mm	M10 x 1.5	10.5mm
42342	M8 x 1.25	10.4mm	M12 x 1.75	12.5mm
42343	M10 x 1.5	14.0mm	M16 x 2.0	17.0mm
42344	M12 x 1.75	14.0mm	M16 x 2.0	17.0mm
42345	M16 x 2.0	21.0mm	M24 x 3.0	20.0mm
303 Stainless Steel, Passivated				
42346	10-24	5/16	3/8-16	.406
42347	1/4-20	23/64	7/16-14	.437
42348	5/16-18	27/64	1/2-13	.484
42349	3/8-16	31/64	9/16-12	.515
42350	7/16-14	17/32	5/8-11	.656
42351	1/2-13	21/32	3/4-10	.656
42352	10-32	5/16	3/8-16	.406
42353	1/4-28	23/64	7/16-14	.437
42354	5/16-24	27/64	1/2-13	.484
42355	3/8-24	31/64	9/16-12	.515
42356	7/16-20	17/32	5/8-11	.656
42357	1/2-20	21/32	3/4-10	.656

Screw Locking Inserts

These are standard heavy wall inserts with thread-locking adhesive applied to the internal threads providing a permanent screw-locking feature. The adhesive activates when a fastener is threaded into the insert. These inserts can be installed using a screw driver, allowing 3-5 minutes for the external thread adhesive to set-up prior to threading into the fastener.

Part No.	Internal Thread	Tap Drill Size	Tap Size External Thread	Length
42550	10-24	5/16	3/8-16	.406
42551	10-32	5/16	3/8-16	.406
42552	1/4-20	23/64	7/16-14	.437
42553	5/16-18	27/64	1/2-13	.484
42554	3/8-16	31/64	9/16-12	.515
42555	1/2-13	21/32	3/4-10	.656

ANGIC GLOBAL SOLUTIONS

Get quote

832-1274 • w

Angic Global Solutions 1-888-872-0690
https://www.AngicGlobal.com Sales@AngicGlobal.com

Keylocking Inserts: Installation & Removal Information

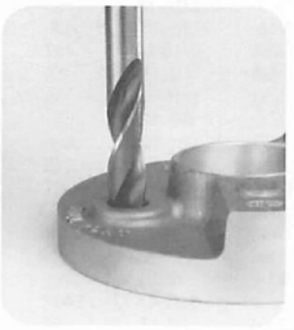

1. Drill out old threads with a standard drill. Countersink with a standard (82-100 degree) countersink.
Note: Drill is oversized, see charts for proper dimensions.

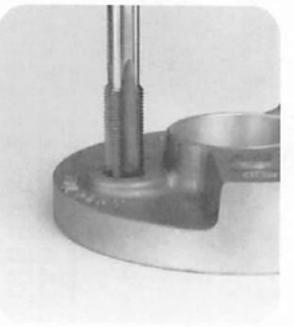

2. Tap new threads with a standad tap. See charts for proper size and depth.

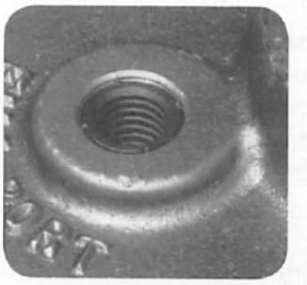

If necessary, Thread Repair Inserts can be removed without damage to the parent material.

1. Drill out material between keys and internal thread with standard drill to specified depth from chart.
2. Bend the keys inward and break off.
3. Remove the old insert using an E-Z out or similar tool.
4. Install replacement insert into the original tapped hole.



3. Screw in the insert until slightly below surface



4. Drive keys down with several hammer taps on the proper installation tool.

Technical Notes

Material:	Carbon Steel Inserts: C1215 or equivalent Stainless Steel Inserts: 303 Keys: 302
Finish:	Carbon Steel Inserts: Parkerized Stainless Steel Inserts: Passivated
Tolerances:	±.010 inch or ±.25 mm unless specified otherwise
Keys:	Inserts with an internal thread size of 5/16 or M7 and larger are furnished with (4) locking keys

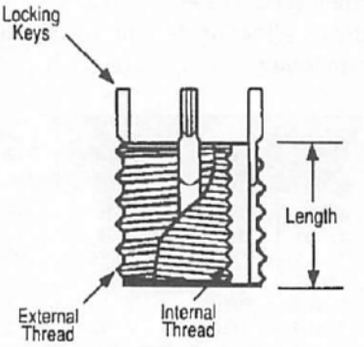

Dimensions are expressed in inches, except metric inserts are in millimeters

Get quote
Angic Global Solutions 1-888-872-0690
https://www.AngicGlobal.com Sales@AngicGlobal.com

Keylocking Inserts

Thinwall

Part Number		Insert			Installation			Thread Tap		Removal	
Carbon Steel	Stainless Steel	Internal Thread Class 2B	External Thread (Mod) Class 2A	Length	Installation Tool Part No.	Tap Drill Size	C'Sink Dia*	Size Class 2B	Min. Depth	Drill Size	Drill Depth
42431	**42453**	10-24	5/16-18	0.31	42482	I	0.32	5/16-18	0.37	7/32	1/8
42432	**42454**	10-32	5/16-18	0.31	42482	I	0.32	5/16-18	0.37	7/32	1/8
42433	**42455**	1/4-20	3/8-16	0.37	42483	Q	0.38	3/8-16	0.43	9/32	3/16
42434	---	1/4-28	3/8-16	0.37	42483	Q	0.38	3/8-16	0.43	9/32	3/16
42435	**42456**	5/16-18	7/16-14	0.43	42484	X	0.44	7/16-14	0.50	11/32	3/16
42436	---	5/16-24	7/16-14	0.43	42484	X	0.44	7/16-14	0.50	11/32	3/16
42437	**42457**	3/8-16	1/2-13	0.50	42485	29/64	0.51	1/2-13	0.56	13/32	3/16
42438	**42458**	3/8-24	1/2-13	0.50	42485	29/64	0.51	1/2-13	0.56	13/32	3/16
42439	---	7/16-14	9/16-12	0.56	42486	33/64	0.57	9/16-12	0.62	15/32	3/16
42440	**42459**	1/2-13	5/8-11	0.62	42487	37/64	0.63	5/8-11	0.68	17/32	3/16
42441	---	1/2-20	5/8-11	0.62	42487	37/64	0.63	5/8-11	0.68	17/32	3/16

*Tolerance: +.010, -.000

Heavy Duty

Part Number		Insert			Installation			Thread Tap		Removal	
Carbon Steel	Stainless Steel	Internal Thread Class 2B	External Thread (Mod) Class 2A	Length	Installation Tool Part No.	Tap Drill Size	C'Sink Dia*	Size Class 2B	Min. Depth	Drill Size	Drill Depth
42410	**42445**	8-32	5/16-18	0.31	42470	I	0.32	5/16-18	0.37	7/32	1/8
42411	**42446**	10-24	3/8-16	0.31	42471	Q	0.38	3/8-16	0.37	9/32	1/8
42412	**42447**	10-32	3/8-16	0.31	42471	Q	0.38	3/8-16	0.37	9/32	1/8
42413	**42448**	1/4-20	7/16-14	0.37	42472	X	0.44	7/16-14	0.43	11/32	3/16
42414	---	1/4-28	7/16-14	0.37	42472	X	0.44	7/16-14	0.43	11/32	3/16
42415	**42449**	5/16-18	1/2-13	0.43	42473	29/64	0.51	1/2-13	0.50	13/32	3/16
42416	---	5/16-24	1/2-13	0.43	42473	29/64	0.51	1/2-13	0.50	13/32	3/16
42417	**42450**	3/8-16	9/16-12	0.50	42474	33/64	0.57	9/16-12	0.56	15/32	3/16
42418	**42451**	3/8-24	9/16-12	0.50	42474	33/64	0.57	9/16-12	0.56	15/32	3/16
42419	---	7/16-14	5/8-11	0.62	42475	37/64	0.63	5/8-11	0.68	17/32	3/16
42420	---	7/16-20	5/8-11	0.62	42475	37/64	0.63	5/8-11	0.68	17/32	3/16
42421	**42452**	1/2-13	3/4-16	0.62	42476	45/64	0.76	3/4-16	0.68	21/32	3/16
42422	---	1/2-20	3/4-16	0.62	42476	45/64	0.76	3/4-16	0.68	21/32	3/16
42423	---	5/8-11	7/8-14	0.87	42478	53/64	0.88	7/8-14	1.00	25/32	5/16
42424	---	5/8-18	7/8-14	0.87	42478	53/64	0.88	7/8-14	1.00	25/32	5/16
42425	---	3/4-10	1-1/8-12	1.12	42479	1-1/16	1.14	1-1/8-12	1.31	31/32	5/16
42426	---	3/4-16	1-1/8-12	1.12	42479	1-1/16	1.14	1-1/8-12	1.31	31/32	5/16
42427	---	7/8-9	1-1/4-12	1.25	42480	1-3/16	1.27	1-1/4-12	1.44	1-3/32	5/16
42428	---	1-8	1-3/8-12	1.37	42481	1-5/16	1.39	1-3/8-12	1.56	1-7/32	5/16

*Tolerance: +.010, -.000

Thinwall: Metric

	Insert			Installation			Thread Tap		Removal	
Part No. Carbon Steel	Internal Thread Class 2B	External Thread (Mod) Class 6G	Length	Installation Tool Part No.	Tap Drill Size	C'Sink Dia*	Size Class 2B	Min. Depth	Drill Size	Drill Depth
62411	M5 x 0.8	M8 x 1.25	8.00	42488	6.9	8.25	M8 x 1.25	9.5	5.50	4.00
62412	M6 x 1.0	M10 x 1.25	10.00	42489	8.8	10.25	M10 x 1.25	11.5	7.50	4.75
62413	M8 x 1.25	M12 x 1.25	12.00	42490	10.8	12.25	M12 x 1.25	13.5	9.50	4.75
62414	M8 x 1.0	M12 x 1.25	12.00	42490	10.8	12.25	M12 x 1.25	13.5	9.50	4.75
62415	M10 x 1.5	M14 x 1.5	14.00	42491	12.8	14.25	M14 x 1.5	15.5	11.50	4.75
62416	M10 x 1.25	M14 x 1.5	14.00	42491	12.8	14.25	M14 x 1.5	15.5	11.50	4.75
62417	M12 x 1.75	M16 x 1.5	16.00	42492	14.75	16.25	M16 x 1.5	17.5	13.50	4.75
62418	M12 x 1.25	M16 x 1.5	16.00	42492	14.75	16.25	M16 x 1.5	17.5	13.50	4.75

*Tolerance: +.010, -.000

ANGIC GLOBAL SOLUTIONS
Get quote
832-1274 • w
Angic Global Solutions 1-888-872-0690
https://www.AngicGlobal.com Sales@AngicGlobal.com

Inserts: Knife Thread Inserts for Wood

External knife threads provide superior holding power in hard and soft woods, particle board and all wood products.

Use wherever field assembly or disassembly could lead to thread erosion or stripping. The long pilot ensures straight driving into a drilled hole. Install with screw driver, bolt and nut, tapping head or driving tool.

- Material: Brass

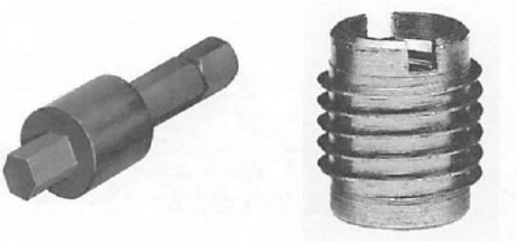

Insert Part No.	Drive Tool Part No.	Internal Thread	Length Overall	Major Diameter External Thread	Hole Size
42378	**N/A**	4-40	.375	.350	1/4
42379	**42309**	6-32	.375	.350	1/4
42380	**42386**	8-32	.375	.350	1/4
42381	**42387**	10-24	.500	.453	3/8
42382	**42387**	10-32	.500	.453	3/8
42383	**42388**	1/4-20	.500	.453	3/8
42302	**42388**	1/4-28	.500	.453	3/8
42384	**42389**	5/16-18	.625	.600	1/2
42303	**42389**	5/16-24	.625	.600	1/2
42385	**42399**	3/8-16	.625	.600	1/2
42304	**42399**	3/8-24	.625	.600	1/2

Inserts: Hexdrive Knife Thread Inserts for Wood

An inexpensive insert for use in ready-to-assemble furniture, drawer pulls and wherever ease of assembly or avoidance of thread stripping is desired. Install with hex drive wrench or drive tool.

- Material: Die cast zinc alloy

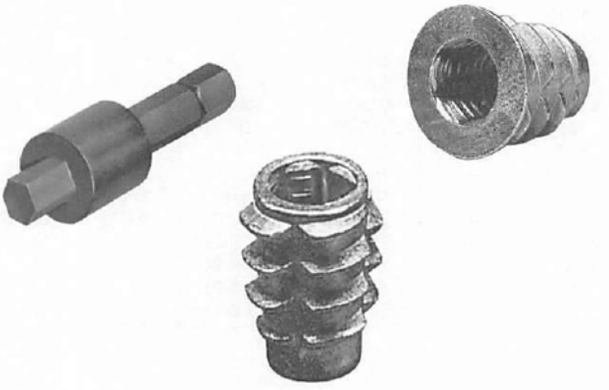

Insert Part No.	Drive Tool Part No.	Description	Length	Hole Size	Hex Dimension
42363	**42368**	8-32 Flanged	11mm	6mm	4mm
42306	**42368**	10-24 Flanged	11mm	4mm	4mm
42364	**42369**	1/4-20 Flanged	13mm	9mm	6mm
42365	**42369**	1/4-20 Flanged	20mm	9mm	6mm
42307	**42300**	5/16-18 Flanged	13mm	8mm	8mm
42308	**42301**	3/8-16 Flanged	25mm	10mm	10mm
42366	**42369**	1/4-20 Flush	13mm	9mm	6mm
42367	**42369**	1/4-20 Flush	20mm	9mm	6mm
42305	**42300**	5/16-18 Flush	20mm	8mm	8mm

Note: 11mm approximately 7/16"; 13mm approximately 1/2"; 20mm approximately 3/4"

Get quote
Angic Global Solutions 1-888-872-0690
https://www.AngicGlobal.com Sales@AngicGlobal.com

Coil Thread Inserts

Economy Installation Kit

Part No.	Quantity of Inserts	Internal Thread	Length
42560	10	6-32	1.5
42561	10	8-32	1.5
42562	10	10-24	1.5
42563	10	1/4-20	1.5
42564	10	5/16-18	1.5
42565	10	3/8-16	1.5
42566	5	1/2-13	1.5
42567	5	5/8-11	1.5
42568	5	3/4-10	1.5
42569	10	10-32	1.5
42570	10	1/4-28	1.5
42571	10	5/16-24	1.5
42572	10	3/8-24	1.5
42573	5	1/2-20	1.5
42574	10	M4-0.7	1.5
42575	10	M6-1.0	1.5
42576	10	M8-1.25	1.5
42577	10	M10-1.5	1.5
42578	5	M12-1.75	1.5

Kit Includes:
Inserts, drill, tap and installation tool



Standard Installation Kit

Part No.	Quantity of Inserts	Internal Thread	Length
42579	10	6-32	1.5
42580	10	8-32	1.5
42581	10	10-24	1.5
42582	10	1/4-20	1.5
42583	10	5/16-18	1.5
42584	10	3/8-16	1.5
42585	5	1/2-13	1.5
42586	10	10-32	1.5
42587	10	M6-1.0	1.5
42588	10	M8-1.25	1.5
42589	10	M10-1.5	1.5

Kit Includes:
Inserts, drill tap, install and tang break tools



ANGIC GLOBAL SOLUTIONS
Get quote
832-1274 • w
Angic Global Solutions 1-888-872-0690
https://www.AngicGlobal.com Sales@AngicGlobal.com

5C Collet Stop Assembly
Part Number 35001

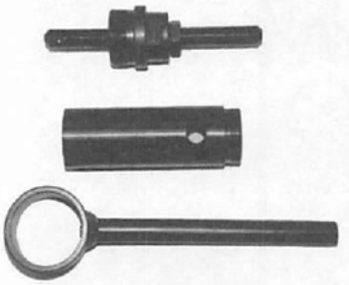

- Assembly includes:
  - Adjustable Collet Stop: Part Number 35002
  - Extension Tube: Part Number 35004
  - Stop Wrench: Part Number 35009
- For use with 5C collets

5C Adjustable Collet Stop
Part Number 35002

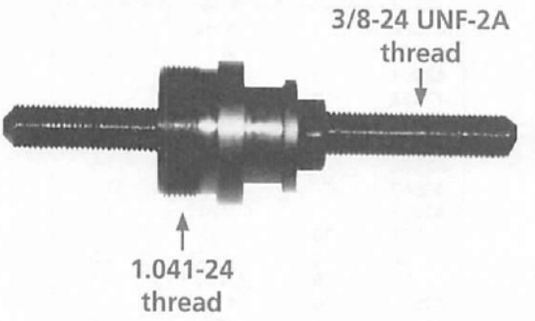

- Fully threaded adjustment screw
- Fits collet with internal threads
- Overall length = 4.12
- Black Oxide Finish

5C Collet Stop Extension Tube
Part Number 35004

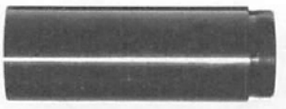

- Adds 3" length to the collet stop
- Conveniently locates long parts
- Two or more tubes can be coupled for desired length
- Internal thread & external thread = 1.041-24

5C Collet Stop Wrench
Part Number 35009



- Easily tightens or removes collet stops
- Saves time and prevents damage to precision collets
- Wrench mates perfectly with collet

Get quote
Angic Global Solutions 1-888-872-0690
https://www.AngicGlobal.com Sales@AngicGlobal.com

GAGING AND INSPECTION

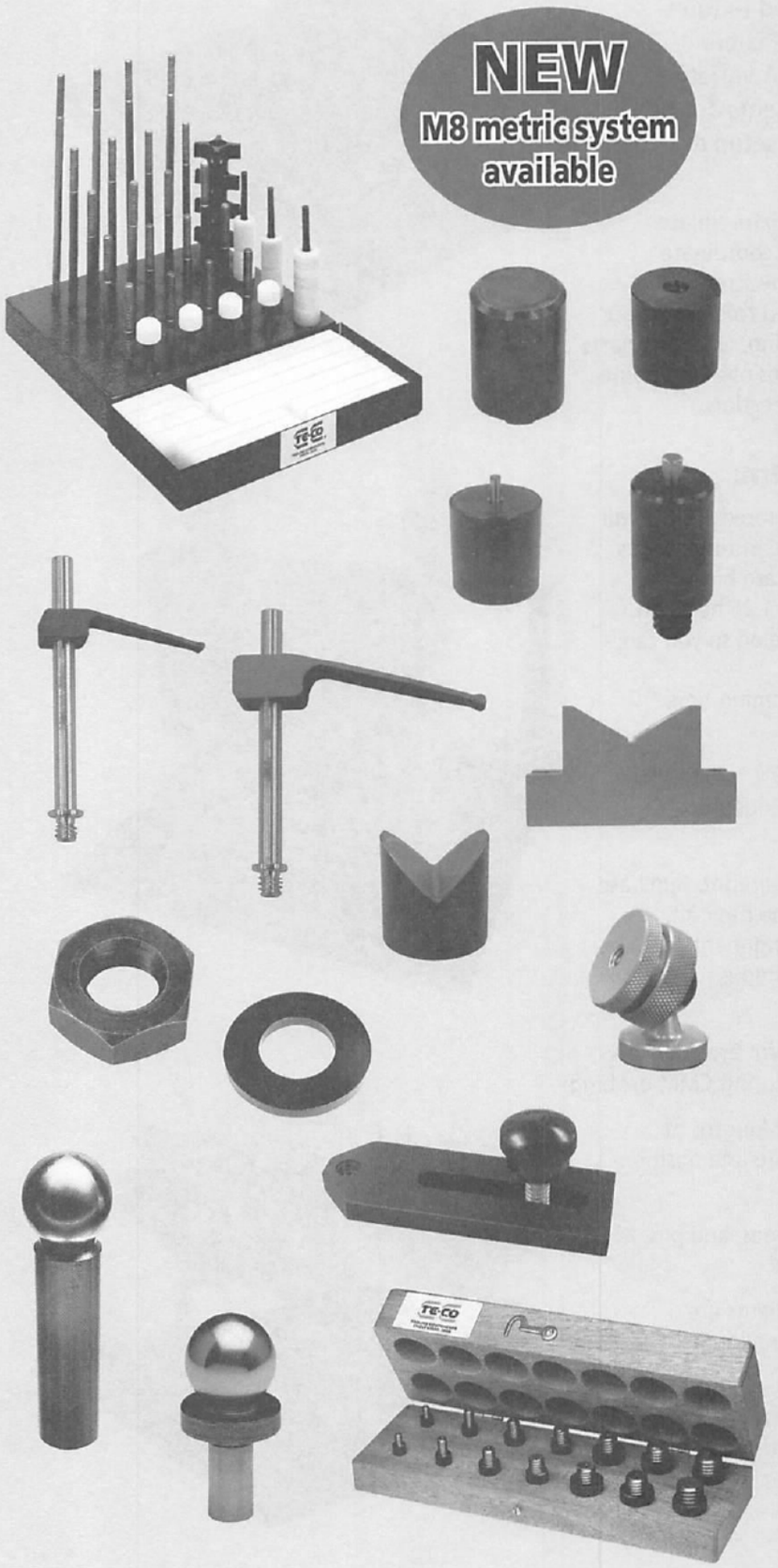

Fixture Plates.....67
Fixturing Towers 68
CMM Fixturing Kits..... 69-71
Soft Touch Clamps.....71
Clamping Components 72-73
Standoffs and Locators..... 74-75
Magnetic Components 76
Height Adjustment 77
Positioners.....78
Clamp Accessories.....79
Plastic Clamp Kits.....80
CMM Clamp Kits (English & Metric).....81
Tapped Hole Location Gages.....82
Tooling & Inspection Balls 83-86

Get quote
Angic Global Solutions 1-888-872-0690
https://www.AngicGlobal.com Sales@AngicGlobal.com

CMM Fixturing System Overview

Our line of CMM fixturing is designed for easy assembly and high repeatability, without the added cost and inconvenience of having to build dedicated fixtures. This system offers a highly accurate and flexible solution for holding parts while probing. A variety of component kits and individual components are available to provide the ability to quickly setup a fixture in a matter of minutes.

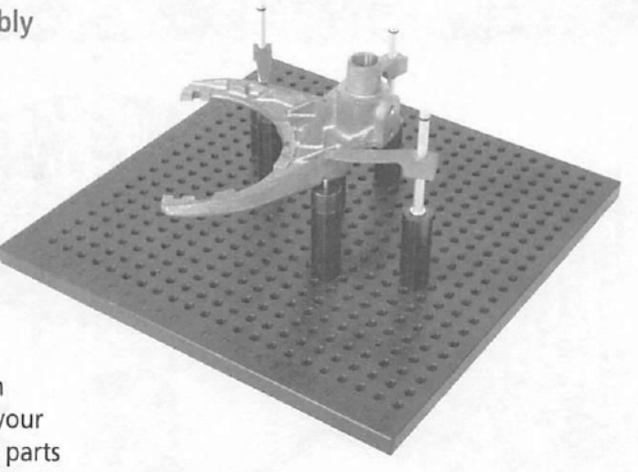

The system works by mounting an aluminum fixture plate with tapped holes to the surface plate of your coordinate measuring machine. Build your CMM fixtures by screwing in standoffs or other locating components needed to elevate your part for optimal part access during CMM probing. Once the parts are positioned, simply actuate soft touch clamps over the points of rest fixing the part in position for CMM inspection.

Features of CMM Fixturing System:

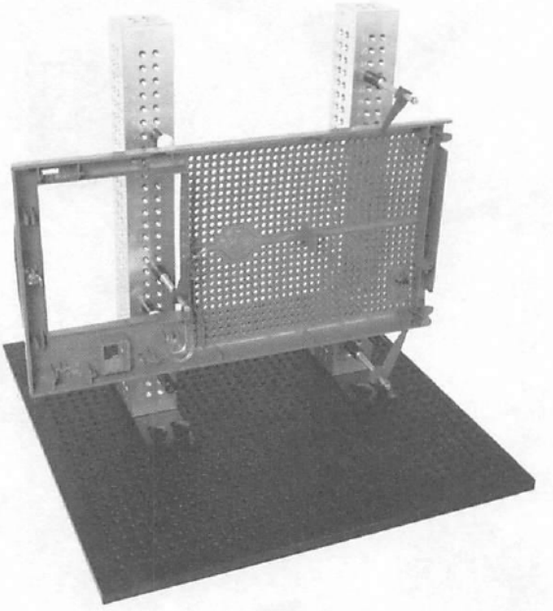

- Aluminum Plates: Standard plate sizes are offered. TE-CO will quote custom plates to accommodate the measuring ranges of specific models of CMMs. Standard plates are black anodized with 1/4-20 holes on 1/2" and M8 x 1.25 holes on 15mm centers and are alpha numerically labeled so you can your CMM fixture setups, saving you setup and programming time. Build it once. Program it once.
- Fixture Towers: Available with 1/4-20 and M8 x 1.25 tapped holes alpha numerically labeled on each face, ideal for building vertical fixture setups
- Component Kits: Plate purchases are not required to purchase component kits or individual components. The basic kit, the comprehensive kit, and the magnetic component pack all come with wooden holders to provide a simple, effective method of storage.
- Soft Touch Clamp: This aluminum clamping arm provides the light clamping force ideal for holding parts during CMM probing.
- Locating Components: Several diameters and lengths of standoffs and rest pads are available to elevate and position parts without restricting access to them.
- Magnetic Components: Magnetic rest pads, vees, and pin rests are available to hold steel and iron parts.
- Adjustable Components: A variety of components are available that provide height adjustment, vee alignment, and flexible hole location.
- Component Thread Size: Standard components are 1/4-20 and M8 x 1.25 thread size. Alternative thread sizes quoted upon request.

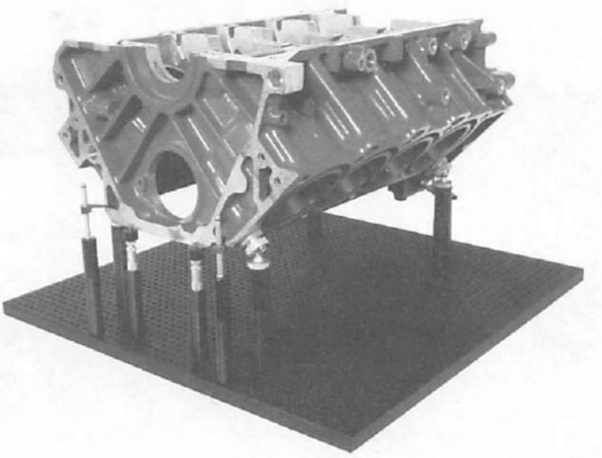

93 -1274 • www.
Get quote
Angic Global Solutions 1-888-872-0690
https://www.AngicGlobal.com Sales@AngicGlobal.com

Aluminum Fixture Plates

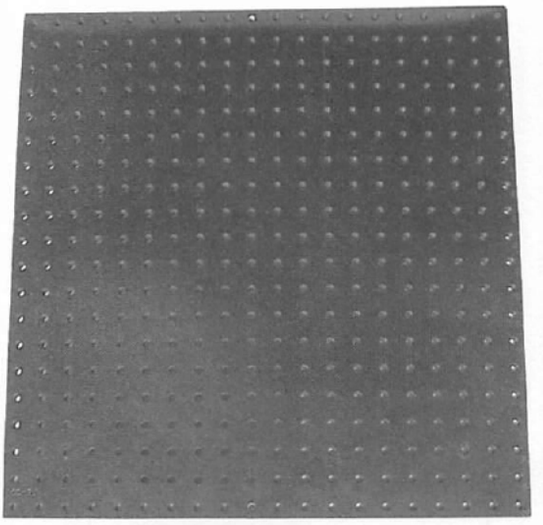

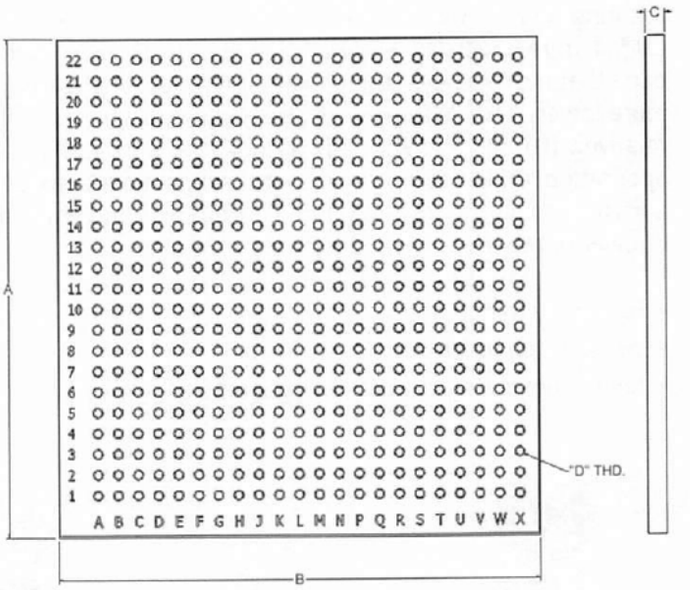

The purpose of the fixture plate is to provide a staging area to build part fixtures. Basic 3-2-1 fixturing holds true for most CMM fixturing applications, although the clamping force required to fixture parts when inspecting with a CMM is significantly less than what is required for machining. Most CMM fixtures require only light pressure clamping to secure the part in a fixed position. Our soft touch clamps are perfect for clamping in CMM fixturing applications.

- Alpha numeric grid pattern
- Black hard coat anodized
- Custom sizes quoted upon request

Inch

Part No.	Length A	Width B	Thickness C	Thread D	Hole Spacing
14312	12"	12"	1/2"	1/4-20	1/2" Centers
14318	18"	18"	1/2"	1/4-20	1/2" Centers
14324	24"	24"	3/4"	1/4-20	1/2" Centers
14330	30"	30"	3/4"	1/4-20	1/2" Centers
14340	28"	40"	3/4"	1/4-20	1/2" Centers

Metric

Part No.	Length A	Width B	Thickness C	Thread D	Hole Spacing
63312	300mm	300mm	13mm	M8 x 1.25	15mm
63318	450mm	450mm	13mm	M8 x 1.25	15mm
63324	600mm	600mm	19mm	M8 x 1.25	15mm

Mounting Information

TE-CO CMM fixture plates can be mounted to the surface plate of your CMM by using step blocks and toe clamps or by drilling mounting holes into the plate which correspond to the inserts in your surface plate.

ANGIC GLOBAL SOLUTIONS
Get quote
832-1274 • w
Angic Global Solutions 1-888-872-0690
https://www.AngicGlobal.com Sales@AngicGlobal.com

Fixturing Towers

The purpose of the fixture towers are to provide a vertical part fixturing solution for CMM fixturing applications. More specifically, CMM fixture towers are especially beneficial when you have longer parts that need to be oriented in an upright position between 2 or more towers. Fixture towers are also applicable when you have a relatively flat part and you need to inspect each of its sides. In this application, CMM fixturing towers make it possible to fixture the part(s) vertically in 1 fixture setup reducing fixturing time and the number of programs needed from 2 to 1.

The solution for vertical part fixturing for CMM applications!

- For vertical fixturing
- Includes tapped holes
- Alpha numerically labeled for repeatability

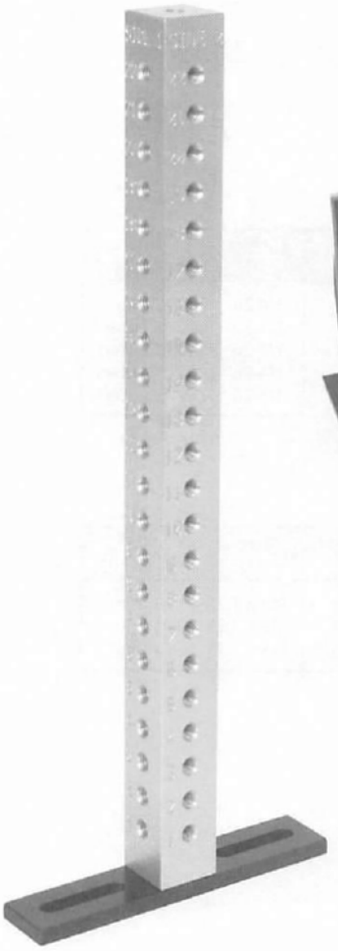

Part #14355 shown

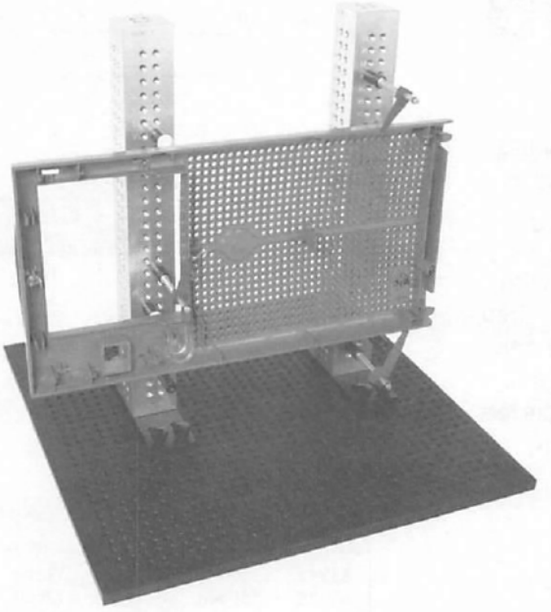

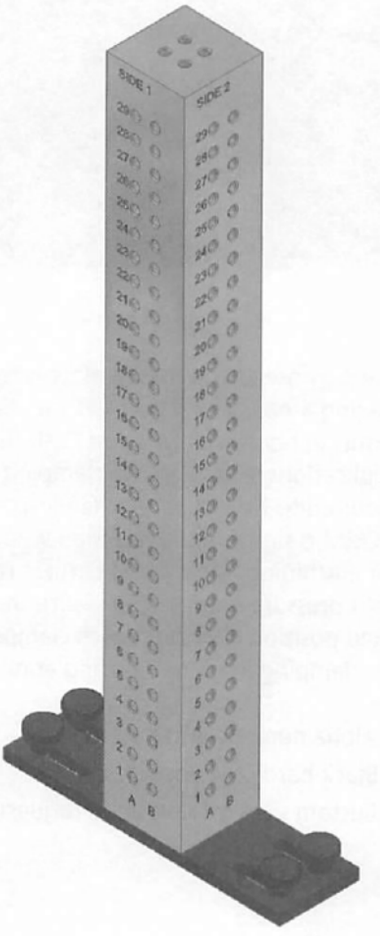

Single Hole Rows – Inch

Part No.	Width A	Height B	Thread Size	Hole Spacing
14350	1"	6"	1/4-20	1/2"
14355	1"	12"	1/4-20	1/2"

Double Hole Rows – Inch

Part No.	Width A	Height B	Thread Size	Hole Spacing
14365	2"	16"	1/4-20	1/2"
14370	2"	20"	1/4-20	1/2"
14375	2"	30"	1/4-20	1/2"

Single Hole Rows – Metric

Part No.	Width A	Height B	Thread Size	Hole Spacing
63350	25mm	150mm	M8 x 1.25	15mm
63355	25mm	300mm	M8 x 1.25	15mm

Double Hole Rows – Metric

Part No.	Width A	Height B	Thread Size	Hole Spacing
63365	50mm	400mm	M8 x 1.25	15mm
63370	50mm	500mm	M8 x 1.25	15mm
63375	50mm	760mm	M8 x 1.25	15mm

Get quote
Angic Global Solutions 1-888-872-0690
https://www.AngicGlobal.com Sales@AngicGlobal.com

CMM Fixturing Kits

Component kits can be purchased with or without purchasing a plate, and all CMM fixture components contained in the kits are also available individually. The Basic Kit, Comprehensive Kit, and Magnetic Component Pack all come with a wooden holder for convenient storage.

You can also build your own CMM Fixturing Kit. Call us for a quote at 800-543-4071 ,or visit our website at www.te-co.com

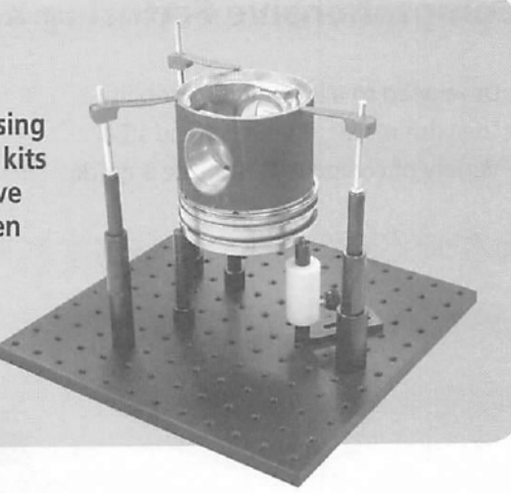

Basic Fixturing Kit

- Designed for clamping non-magnetic parts
- Use with plastic, aluminum and steel

Ideal to combine with the Magnetic Component Pack shown on page 71!

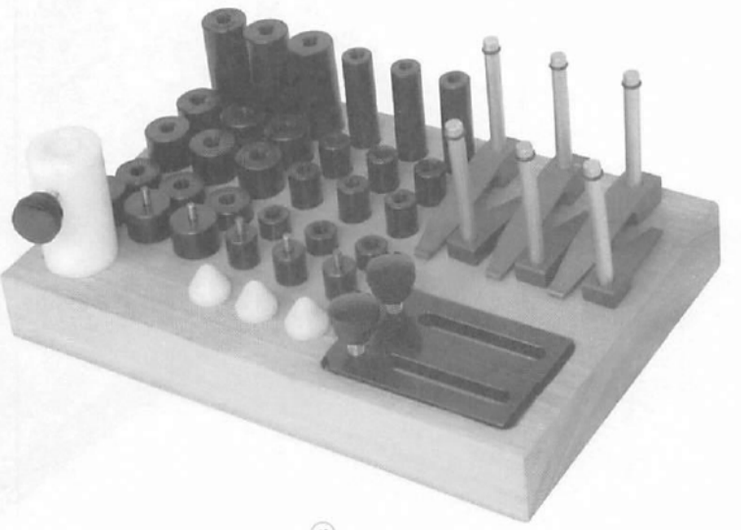

Part No. 14301: 1/4-20 Kit

Item No.	Part No.	Description	Qty.
1	14060	Small Soft Touch Clamp	3
2	14064	Large Soft Touch Clamp	3
3	14034	Large Adjustable Positioner	2
4	14201	Delrin Height Adjuster	1
5	14075	Delrin Cones	3
6	14040	1/2" Dia. x 1/2" Height Pin Rest	3
7	14041	3/4" Dia. x 1/2" Height Pin Rest	3
8	14017	1/2" Dia. x 3/4" Height Standoff	3
9	14018	1/2" Dia. x 1" Height Standoff	6
10	14019	1/2" Dia. x 2" Height Standoff	3
11	14022	3/4" Dia. x 3/4" Height Standoff	3
12	14023	3/4" Dia. x 1" Height Standoff	6
13	14024	3/4" Dia. x 2" Height Standoff	3
14	40091	Wooden Component Holder	1

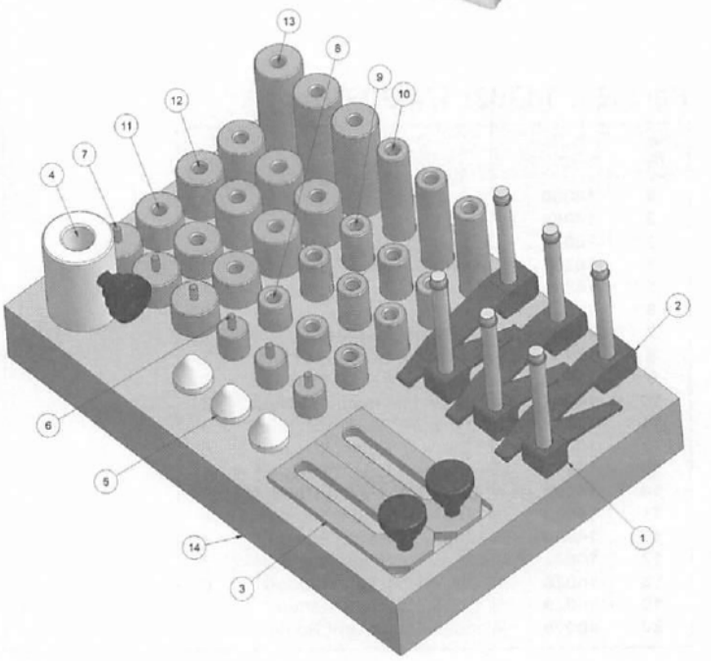

Part No. 63301: M8 x 1.25 Kit

Item No.	Part No.	Description	Qty.
1	63060	Small Soft Touch Clamp	3
2	63064	Large Soft Touch Clamp	3
3	63034	Large Adjustable Positioner	2
4	63201	Delrin Height Adjuster	1
5	63075	Delrin Cone	3
6	63040	13mm Dia. x 25mm Height Pin Rest	3
7	63041	19mm Dia. x 25mm Height Pin Rest	3
8	63017	13mm Dia. x 20mm Height Standoff	3
9	63018	13mm Dia. x 25mm Height Standoff	6
10	63019	13mm Dia. x 50mm Height Standoff	3
11	63022	19mm Dia. x 20mm Height Standoff	3
12	63023	19mm Dia. x 25mm Height Standoff	6
13	63024	19mm Dia. x 50mm Height Standoff	3
14	40089	Wooden Component Holder	1

Get quote
832-1274 • w
Angic Global Solutions 1-888-872-0690
https://www.AngicGlobal.com Sales@AngicGlobal.com

Comprehensive Fixturing Kit

- Developed to allow added flexibility
- Use with plastic, aluminum and steel
- Variety of components Provide a quick,



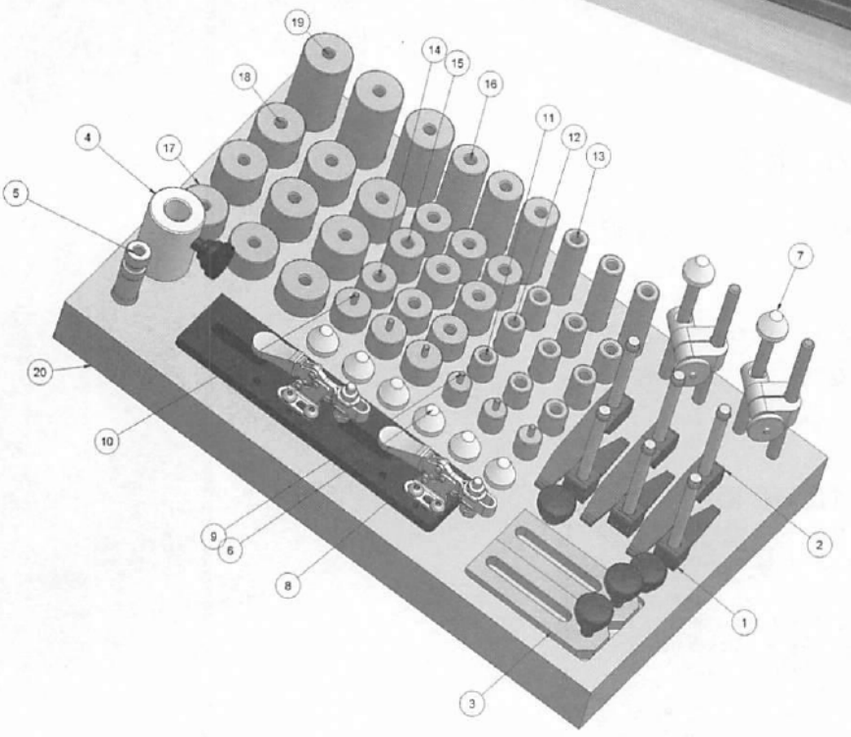

Part No. 14302: 1/4-20 Kit

Item No.	Part No.	Description	Qty.
1	14060	Small Soft Touch Clamp	3
2	14064	Large Soft Touch Clamp	3
3	14034	Large Adjustable Positioner	2
4	14201	Delrin Height Adjuster	1
5	14215	1/2" Dia. Screw Jack	1
6	14075	Delrin Cones	6
7	14082	Swivel Joint Rest	2
8	14158	Small Toggle Clamp with Pad	2
9	14040	1/2" Dia. x 1/2" Height Pin Rest	3
10	14041	3/4" Dia. x 1/2" Height Pin Rest	3
11	14017	1/2" Dia. x 3/4" Height Standoff	3
12	14018	1/2" Dia. x 1" Height Standoff	6
13	14019	1/2" Dia. x 2" Height Standoff	3
14	14022	3/4" Dia. x 3/4" Height Standoff	3
15	14023	3/4" Dia. x 1" Height Standoff	6
16	14024	3/4" Dia. x 2" Height Standoff	3
17	14027	1" Dia. x 3/4" Height Standoff	3
18	14028	1" Dia. x 1" Height Standoff	6
19	14029	1" Dia. x 2" Height Standoff	3
20	40090	Wooden Component Holder	1

Part No. 63302: M8 x 1.25 Kit

Item No.	Part No.	Description	Qty.
1	63060	Small Soft Touch Clamp	3
2	63064	Large Soft Touch Clamp	3
3	63034	Large Adjustable Positioner	2
4	63201	Delrin Height Adjuster	1
5	63005	19mm Dia. Screw Jack	1
6	63075	Delrin Cone	6
7	63082	Swivel Joint Rest	2
8	63158	Small Toggle Clamp with Pad	2
9	63040	13mm Dia. x 25mm Height Pin Rest	3
10	63041	19mm Dia. x 25mm Height Pin Rest	3
11	63017	13mm Dia. x 20mm Height Standoff	3
12	63018	13mm Dia. x 25mm Height Standoff	6
13	63019	13mm Dia. x 50mm Height Standoff	3
14	63022	19mm Dia. x 20mm Height Standoff	3
15	63023	19mm Dia. x 25mm Height Standoff	6
16	63024	19mm Dia. x 20mm Height Standoff	3
17	63027	25mm Dia. x 20mm Height Standoff	3
18	63028	25mm Dia. x 25mm Height Standoff	6
19	63029	25mm Dia. x 50mm Height Standoff	3
20	40093	Wooden Component Holder	1

93 ANGIC Get quote -1274 • www Angic Global Solutions 1-888-872-0690
https://www.AngicGlobal.com Sales@AngicGlobal.com

Magnetic Component Pack

- Magnets optimize access for probing of steel parts
- Use with steel & iron

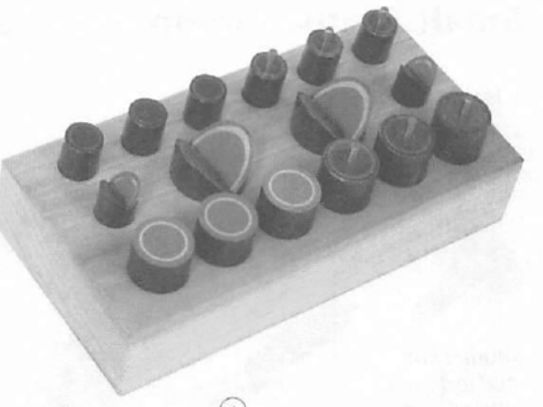

Part No. 14303: 1/4-20 Kit

Item No.	Part No.	Description	Qty.
1	14102	1/2" Dia. x 1" Height Magnetic Rest Pad	3
2	14103	3/4" Dia. x 1" Height Magnetic Rest Pad	3
3	14132	1/2" Dia. x 1" Height Magnetic Pin Rest	3
4	14133	3/4" Dia. x 1" Height Magnetic Pin Rest	3
5	14141	1/2" Dia. x 1" Magnetic V Standoff	2
6	14143	1" Dia. x 1" Height Magnetic V Standoff	2
7	40092	Wooden Component Holder	1

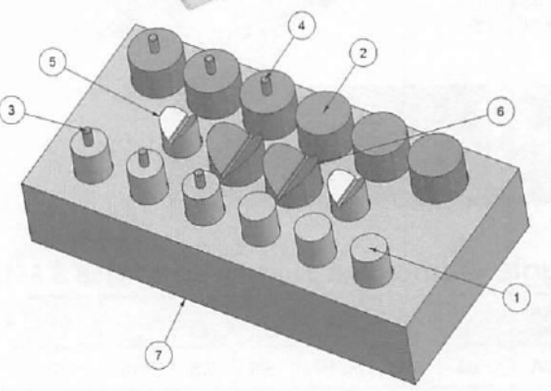

Part No. 63303: M8 x 1.25 Kit

Item No.	Part No.	Description	Qty.
1	63102	12.7mm Dia. x 25mm Height Magnetic Rest Pad	3
2	63103	19mm Dia. x 25mm Height Magnetic Rest Pad	3
3	63132	12.7mm Dia. x 25mm Height Magnetic Pin Rest	3
4	63133	19mm Dia. x 25mm Height Magnetic Pin Rest	3
5	63141	12.7mm Dia. x 25.4mm Magnetic V Standoff	2
6	63143	25.4mm Dia. x 25.4mm Magnetic V Standoff	2
7	40092	Wooden Component Holder	1

Soft Touch Clamps

- Ideal for light pressure clamping
- Made of aluminum

Actuates with the press of a finger!

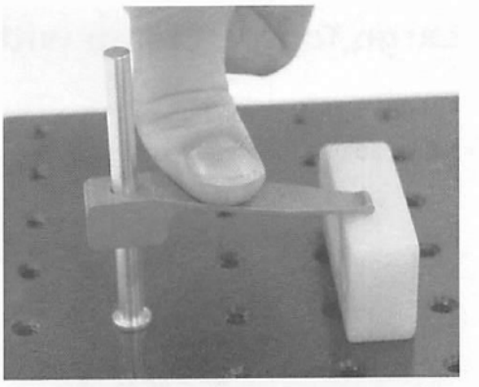



Optional rubber coated tip helps prevent marring of parts during inspection



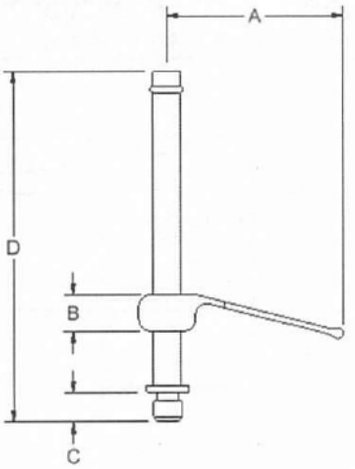

NOTE: Not recommended for machining purposes

Inch 1/4-20

Part No.	Rubber Coated Tip Part No.	A	B	C	D
14060	14050	1.55	.312	.250	3.00
14064	14054	2.31	.477	.250	3.00

Metric M8 x 1.25

Part No.	Rubber Coated Tip Part No.	A	B	C	D
63060	63050	39mm	8mm	6.37mm	75mm
63064	63054	58.7mm	12mm	6.37mm	75mm

Available in 2 sizes, with or without rubber coated tip.

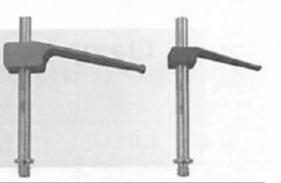

ANGIC GLOBAL SOLUTIONS
Get quote
32-1274 • ww
Angic Global Solutions 1-888-872-0690
https://www.AngicGlobal.com Sales@AngicGlobal.com

Small Toggle Clamp with Pad

- Holds parts for probing
- Base adjusts for placement

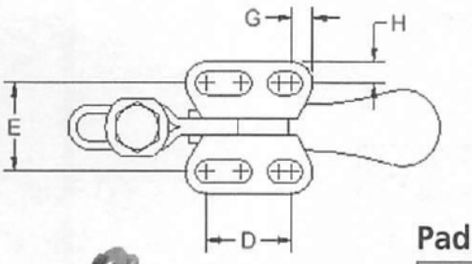

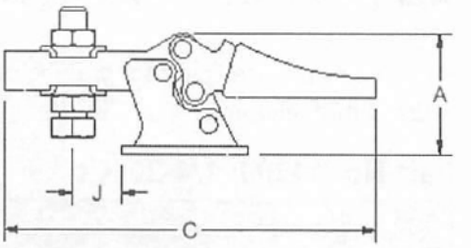



Knurled knob stud included with all pads

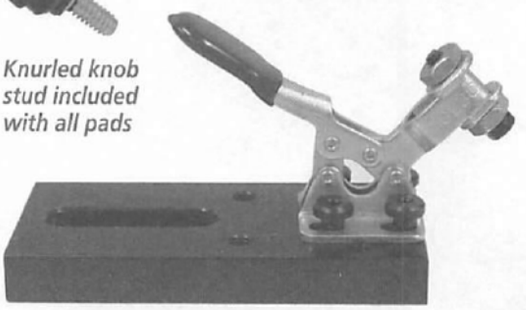

Pad – Inch

Part No.	K	L	M	N	P	Q
14158	3.125	.375	1.50	1.00	.375	.750

Pad – Metric

Part No.	K	L	M	N	P	Q
63158	80mm	6.35mm	38mm	25mm	13mm	19mm

Toggle Clamp (included with pads 14158 & 63158)

Part No.	A	B	C	D	E	G	H	J
N/A	3/4	5/16	2-21/32	5/8	5/8	5/16	5/32	11/16

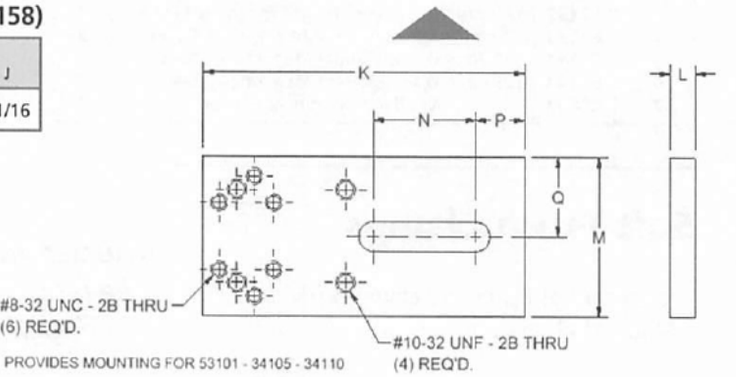

Large Toggle Clamp with Pad

- Holds parts for probing
- Base adjusts for placement

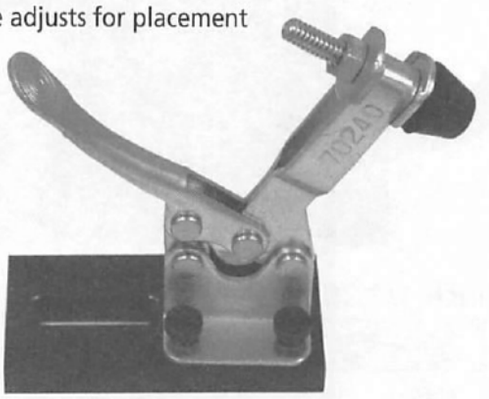



Knurled knob stud included with all pads

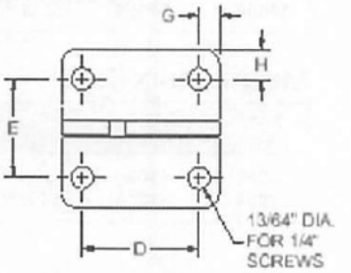

Pad – Inch

Part No.	K	L	M	N	P	Q
14159	3.125	.375	1.50	1.00	.375	.750

Pad – Metric

Part No.	K	L	M	N	P	Q
63159	80mm	6.35mm	38mm	25mm	13mm	19mm

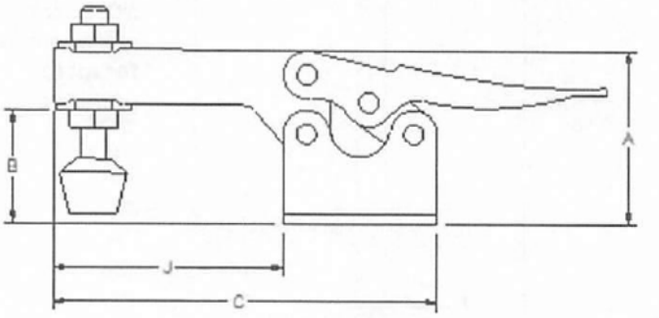

Toggle Clamp (included with pads 14159 & 63159)

Part No.	A	B	C	D	E	G	H	J
N/A	1-1/2	1	5-7/16	1-1/16	7/8	3/16	17/64	2-1/4

Get quote
Angic Global Solutions 1-888-872-0690
https://www.AngicGlobal.com Sales@AngicGlobal.com

T-Handle Spring Stop with Pad

- Provides horizontal clamping
- T-Handle allows for quick changeover
- Base adjusts for placement

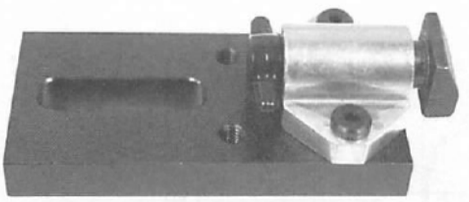



Knurled knob stud included with all pads

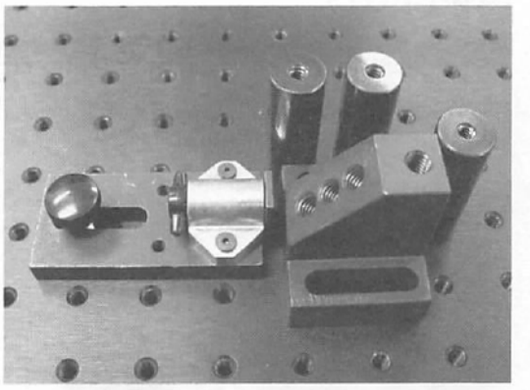

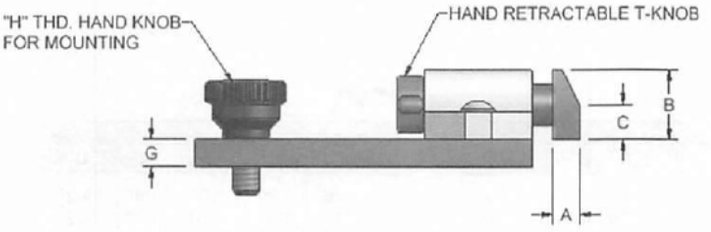

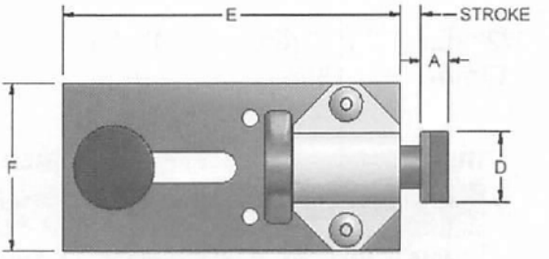

Spring Stop (included with pads)

Part No.	A	B	C	D
N/A	1/4	5/8	5/16	5/8

Pad – Inch

Part No.	E	F	G
14160	3.125	1.50	.375

Pad – Metric

Part No.	E	F	G
63160	80mm	38mm	6.35mm

Adjustable Positioner

- Allows for flexible hole placement
- Includes knurled knob stud to lock in place

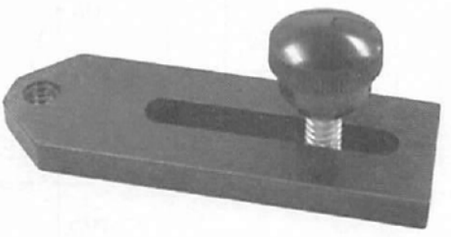

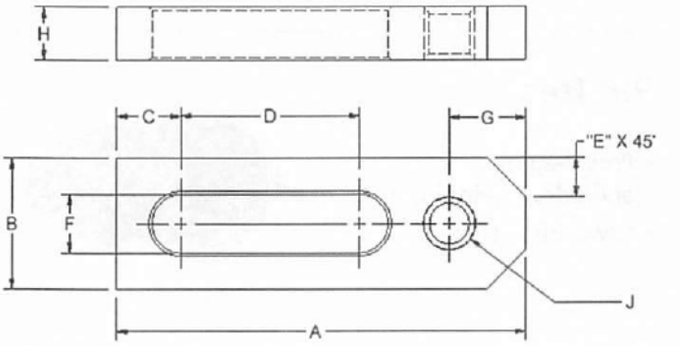

Part No.	Length A	Width B	C	D	E	F	G	H	J
14033	2.00	.625	.313	.875	3/16	.281	.38	.25	1/4-20
14034	3.00	1.00	.313	1.75	1/4	.281	.38	.25	1/4-20
63033	51mm	15mm	8mm	22mm	5mm	8.75mm	5mm	6.4mm	M8x1.25
63034	76mm	25mm	8mm	45mm	6.4mm	8.75mm	6.4mm	6.4mm	M8x1.25

ANGIC GLOBAL SOLUTIONS
Get quote
32-1274 • ww
Angic Global Solutions 1-888-872-0690
https://www.AngicGlobal.com Sales@AngicGlobal.com

Standoffs

- Provides resting point to elevate part for probing
- Low carbon steel

3 diameters are available in a variety of heights



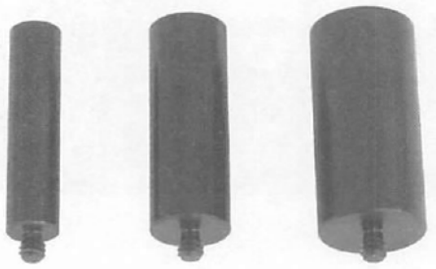

1/2" dia. 13mm | 3/4" dia. 19mm | 1" dia. 25mm

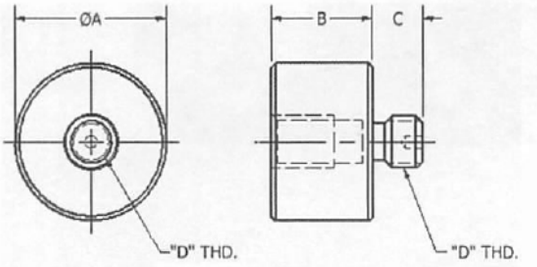

Inch

Part No.	Dia. A	Height B	C	Thread D
14016	.500	.500	1/4"	1/4-20
14017	.500	.750	1/4"	1/4-20
14018	.500	1.00	1/4"	1/4-20
14019	.500	2.00	1/4"	1/4-20
14020	.500	3.00	1/4"	1/4-20

Inch

Part No.	Dia. A	Height B	C	Thread D
14021	.750	.500	1/4"	1/4-20
14022	.750	.750	1/4"	1/4-20
14023	.750	1.00	1/4"	1/4-20
14024	.750	2.00	1/4"	1/4-20
14025	.750	3.00	1/4"	1/4-20

Inch

Part No.	Dia. A	Height B	C	Thread D
14026	1.00	.500	1/4"	1/4-20
14027	1.00	.750	1/4"	1/4-20
14028	1.00	1.00	1/4"	1/4-20
14029	1.00	2.00	1/4"	1/4-20
14030	1.00	3.00	1/4"	1/4-20

Metric

Part No.	Dia. A	Height B	C	Thread D
63016	13mm	15mm	8mm	M8 X 1.25
63017	13mm	20mm	8mm	M8 X 1.25
63018	13mm	25mm	8mm	M8 X 1.25
63019	13mm	50mm	8mm	M8 X 1.25
63020	13mm	75mm	8mm	M8 X 1.25

Metric

Part No.	Dia. A	Height B	C	Thread D
63021	19mm	15mm	8mm	M8 X 1.25
63022	19mm	20mm	8mm	M8 X 1.25
63023	19mm	25mm	8mm	M8 X 1.25
63024	19mm	50mm	8mm	M8 X 1.25
63025	19mm	75mm	8mm	M8 X 1.25

Metric

Part No.	Dia. A	Height B	C	Thread D
63026	25mm	15mm	8mm	M8 X 1.25
63027	25mm	20mm	8mm	M8 X 1.25
63028	25mm	25mm	8mm	M8 X 1.25
63029	25mm	50mm	8mm	M8 X 1.25
63030	25mm	75mm	8mm	M8 X 1.25

Pin Rest

- Provides point of rest and side stop for locating
- Low carbon steel

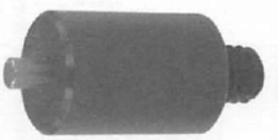

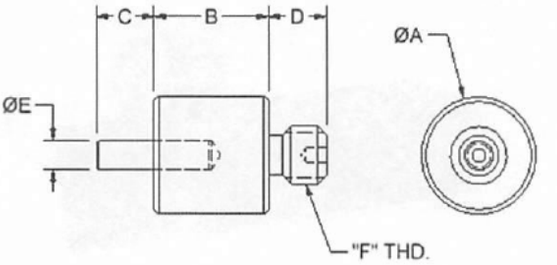

Inch

Part No.	Dia. A	Height B	C	D	E	F
14040	.500	.500	1/4"	1/4"	.125"	1/4-20
14041	.750	.500	1/4"	1/4"	.125"	1/4-20

Metric

Part No.	Dia. A	Height B	C	D	E	F
63040	13mm	25mm	6mm	6.4mm	3mm	M8 x 1.25
63041	19mm	25mm	6mm	6.4mm	3mm	M8 x 1.25

Get quote
Angic Global Solutions 1-888-872-0690
https://www.AngicGlobal.com Sales@AngicGlobal.com

Thread Adapter

- Converts between 1/4-20 and 5/16-18 systems
- Low carbon steel

Part No.	A	B	C	D
13085	1.00	1.00	1/4-20	5/16-18
13086	1.00	1.00	5/16-18	1/4-20



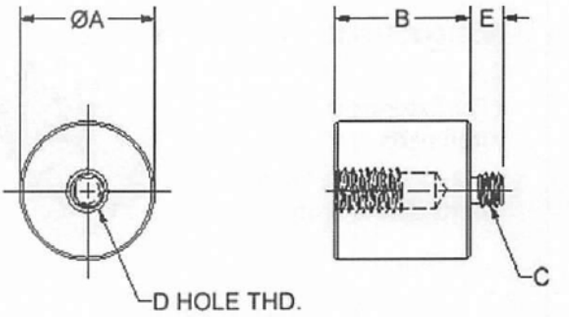

Delrin® Cone

- For nesting cylindrical or curved parts
- Delrin offers non-marring attribute
- Also provides resting point without limiting access to part



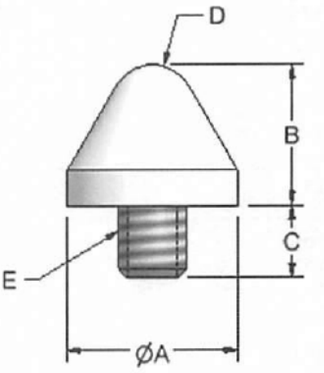

Inch

Part No.	Dia. A	Height B	C	D	E
14075	.625	.500	1/4"	.156	1/4-20

Metric

Part No.	Dia. A	Height B	C	D	E
63075	16mm	13mm	6.4mm	4mm	M8 x 1.25

Delrin® Holder for Magnetic Vee Standoffs

For aligning multiple vees to hold cylindrical parts

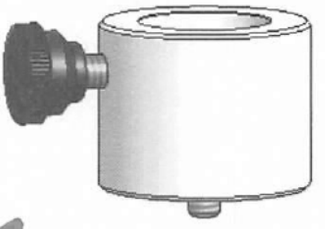

Use with Magnetic Vee shown on page 76.



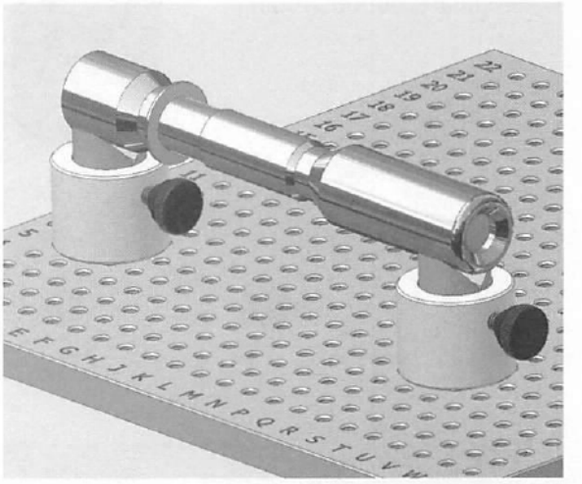

Inch

Part No.	Outside Dia.	Inside Dia.	Internal Depth	Height	Use With
14162	1.13"	.500"	.625"	1.25"	14141
14164	1.63"	1.00"	.500"	1.25"	14143

Metric

Part No.	Outside Dia.	Inside Dia.	Internal Depth	Height	Use With
63162	28mm	13.5mm	15.8mm	32mm	63141
63163	35mm	19.5mm	15.8mm	32mm	63142
63164	41mm	25.4mm	13mm	32mm	63143

ANGIC GLOBAL SOLUTIONS
Get quote
332-1274 • ww
Angic Global Solutions 1-888-872-0690
https://www.AngicGlobal.com Sales@AngicGlobal.com

Magnetic Rest Pad

- For fixturing steel or iron parts
- Magnetic force holds parts during probing



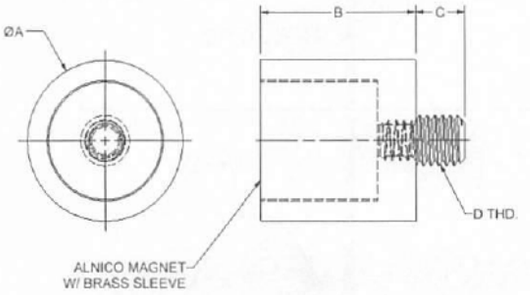

Part No.	Dia. A	Height B	C	D
14101	.250	1.00	1/4"	1/4-20
14102	.500	1.00	1/4"	1/4-20
14103	.750	1.00	1/4"	1/4-20
14104	1.00	1.00	1/4"	1/4-20
63102	12.7mm	25mm	8mm	M8 x 1.25
63103	19mm	25mm	8mm	M8 x 1.25
63104	25.4mm	25mm	8mm	M8 x 1.25

Magnetic Vee Standoff

- For fixturing cylindrical steel or iron parts
- Magnetic force holds parts during probing



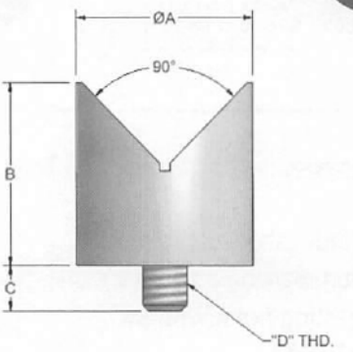

Part No.	Dia. A	Height B	C	D	Holding Capacity Dia.
14141	.500	1.00	1/4"	1/4-20	.125-.625"
14143	1.00	1.00	1/4"	1/4-20	.125-.1.25"
63141	12.7mm	25.4mm	6.4mm	M8 x 1.25	3mm-16mm
63143	25.4mm	25.4mm	6.4mm	M8 x 1.25	3mm-40mm

Magnetic Pin Rest

Locates and holds steel or iron parts during probing.



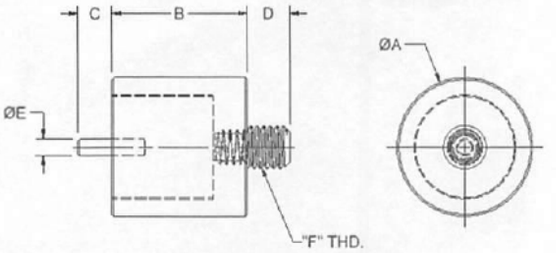

Part No.	Dia. A	Height B	C	D	E	F
14132	.500	1.00	1/4"	1/4"	.125"	1/4"-20
14133	.750	1.00	1/4"	1/4"	.125"	1/4"-20
14134	1.00	1.00	1/4"	1/4"	.125"	1/4"-20
63132	12.7mm	25mm	6mm	8mm	3mm	M8 x 1.25
63133	19mm	25mm	6mm	8mm	3mm	M8 x 1.25
63134	25.4mm	25mm	6mm	8mm	3mm	M8 x 1.25

Magnetic Vee Block

- For holding large cylindrical steel or iron parts
- Includes two cap screws to fasten to plate



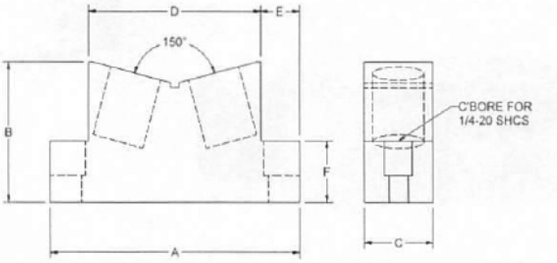

Part No.	A	B	C	D	E	F	Holding Capacity Dia.
14150	3.63"	2"	1"	2.5"	.56"	.68"	2.00-6.25"
63150	92mm	42mm	25mm	63.4mm	14mm	22mm	50mm-159mm

Get quote
Angic Global Solutions 1-888-872-0690
https://www.AngicGlobal.com Sales@AngicGlobal.com

Delrin® Height Adjuster

- Slips over 1/2" diameter standoffs
- Knurled knob stud quickly tightens for height adjustment
- Standoffs sold separately



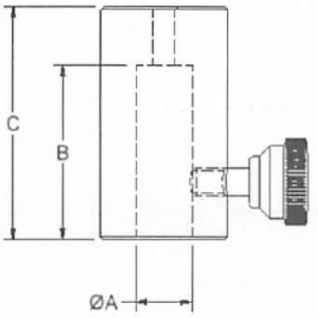

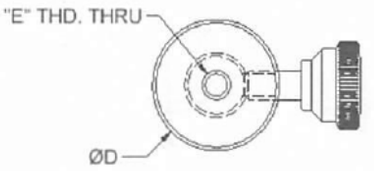

Part No.	A	B	C	D	E
14201 63201	.50 12.7mm	1.50 38mm	2" 50mm	1.13" 28mm	1/4-20 M8 x 1.25

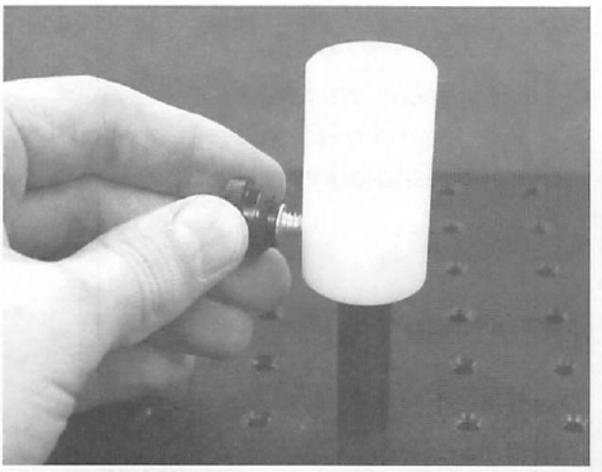

Perform fast and easy height adjustments with Delrin® Height Adjusters from TE-CO!

Screw Jack

- Allows for fine height adjustment during probing
- Made of aluminum



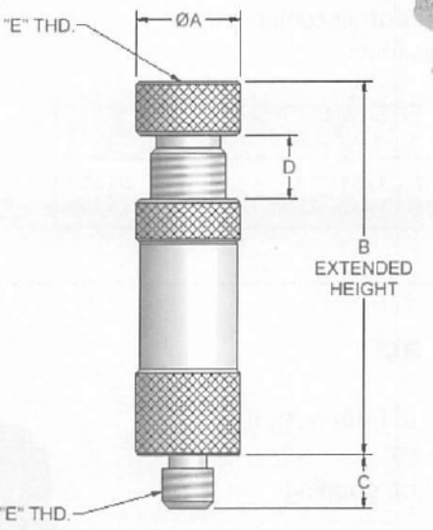

Part No.	A	B	C	D	E	F
14215 63005	.50 19mm	1.75" 44.5mm	1/4 6.4mm	.30" 8mm	1/4-20 M8 x 1.25	1/4-20 M8 x 1.25

www.te-co.com

Information right at your fingertips, anytime you need it!

Downloadable CAD Models

Tradeshow Information

Featured Products

TE-CO Representatives Locator

Price List

Product Literature

ANGIC GLOBAL SOLUTIONS

Get quote

Angic Global Solutions 1-888-872-0690

https://www.AngicGlobal.com Sales@AngicGlobal.com

Adjustable Ball Positioner

- For holding parts at an angle
- Pivots approximately 45° from horizontal in every direction
- Collar easily rotates and tightens on ball at variable angles
- Cylindrical top contains centered 1/4-20 or M8 x 1.25 tapped holes
- Ball is steel; all other components are 6160 aluminum



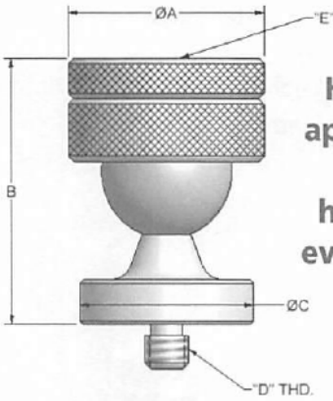

Head pivots approximately 45° from horizontal in every direction

Part No.	A	B	C	D	E
14225 **63225**	1.125" 28.5mm	1.35" 34mm	1" 25mm	1/4-20 M8 x 1.25	1/4-20 M8 x 1.25

Toggle Pad

- Pad swivels 10° from vertical in all directions
- Assures positive gripping



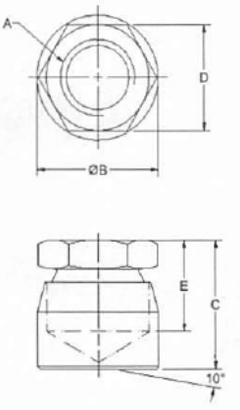

Part No.	A	B	C	D	E
44302	1/4-20	.625	.625	.500	.4063

Swivel Joint Rest

- Rotates 360° from side-to-side and up-and-down
- Arm extends and retracts
- Rotating arm features Delrin cone for positioning a part without marring its surface
- Length of rod = 4.00"

Extendable arm rotates 360° from side-to-side and up-and-down

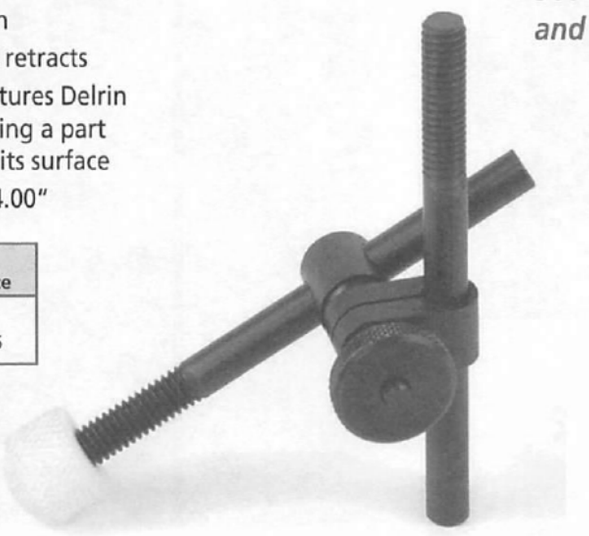

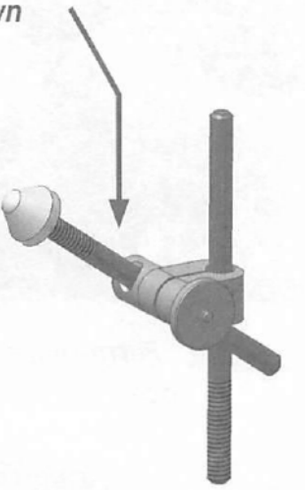

Part No.	Thread Size
14082 **63082**	1/4-20 M8 x 1.25

Get quote
Angic Global Solutions 1-888-872-0690
https://www.AngicGlobal.com Sales@AngicGlobal.com

Knurled Knob with Stud

For use with:

- Adjustable positioners
- Toggle clamp pads
- Spring stop pads
- Delrin height adjuster
- Magnetic vee holder
- Fixturing towers

Multiple uses!



Part No.	Thread Size
14203 **63203**	1/4-20 M8 x 1.25

Cap Screw

For use with magnetic vee block (shown on page 76). Two cap screws are included with each magnetic vee block.



Part No.	Thread Size	Thread Length
RSB4503 **63110**	1/4-20 M8 x 1.25	3/4 20mm

Clamp Support

- Includes washer, spring and shaft collar
- Black oxide finish on washer

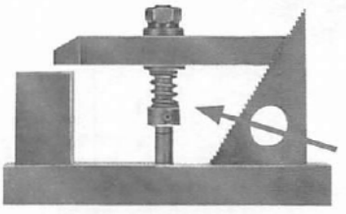

For use with step blocks and clamps



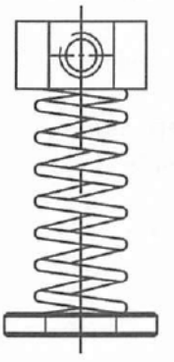

Part No.	Stud Size	Weight (lbs/kit)
50801	1/4	4
50802	5/16/M8	4

Hex Jam Nuts

- Black oxide finish
- High grade alloy steel
- Will outlast ordinary hex jam nuts when used in repetitive operations
- Standard package quantity: 25 pcs.

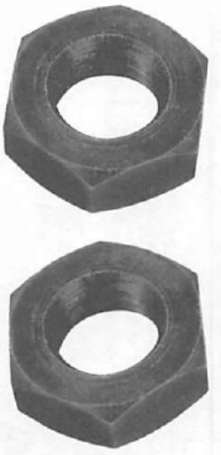

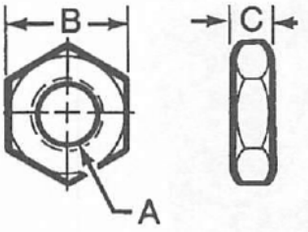

Part No.	Thread A	B	C	Weight (lbs/100pcs)
42201 **63222**	1/4-20 M8 x 1.25	1/2 9mm	11/64 6.5mm	1 1

Hardened Flat Washer

- Black oxide finish and case hardened
- Material: C1010 Steel
- Many sizes conform to TCMAI standards
- Large quantities quoted upon request

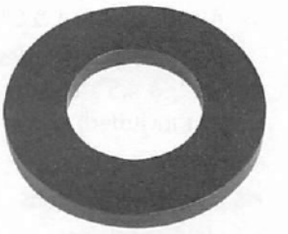

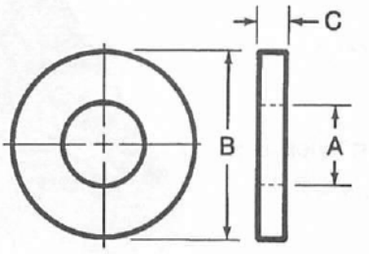

Steel Part No.	Stud Size	A	B	C	Weight (lbs/100pcs)
42601 **63602**	1/4 M8	9/32 9mm	5/8 19mm	1/8 3mm	1 2

ANGIC GLOBAL SOLUTIONS
Get quote
Angic Global Solutions 1-888-872-0690
https://www.AngicGlobal.com Sales@AngicGlobal.com

Plastic Clamp Kit

The TE-CO Plastic Clamp Kit is designed exclusively for the CMM inspection, laboratory inspection and gaging applications. The lightweight construction prevents possible damage to granite plates, delicate workpieces, costly inspection fixtures and expensive laboratory instruments.

The plastic construction of the kit helps eliminate damage to painted, plated or finished surfaces while minimizing distortion of plastic or slender shapes. The hand-tightening design allows the user to apply optimum hold down force and prevent possible damage to granite plate inserts. This unique, non-marking clamping kit is designed to meet today's demanding inspection needs.

- Kits are used to properly hold down workpiece during inspection
- Eliminates marring of workpiece surface
- Lightweight construction minimizes part distortion
- Reduces risk of damage to surface plate or CMM table

Kit Contains:

- **24 Steel Studs**
  - 4 each of 2, 3 ,4, 5, 6, & 8" lengths
  - Part #12110 does not include 8" length studs
- **12 Plastic Clamps**
  - 4 each of 2.5, 4 & 6" lengths
  - Part #12110 includes 4 each of 2.5", 3.5", & 4.5" lengths (4" & 6" lengths not included)
- **4 coupling nuts**
- **4 plastic hand knobs**
- **4 plastic rest feet**
- **8 washers**
- **1 holder (metal tray)**

Materials:

- Clamps, rest feet: Nylon 101
- Studs, coupling nuts and washers: Steel



Plastic components eliminate marring of the workpiece surface and minimize part distortion

Individual components are available upon request

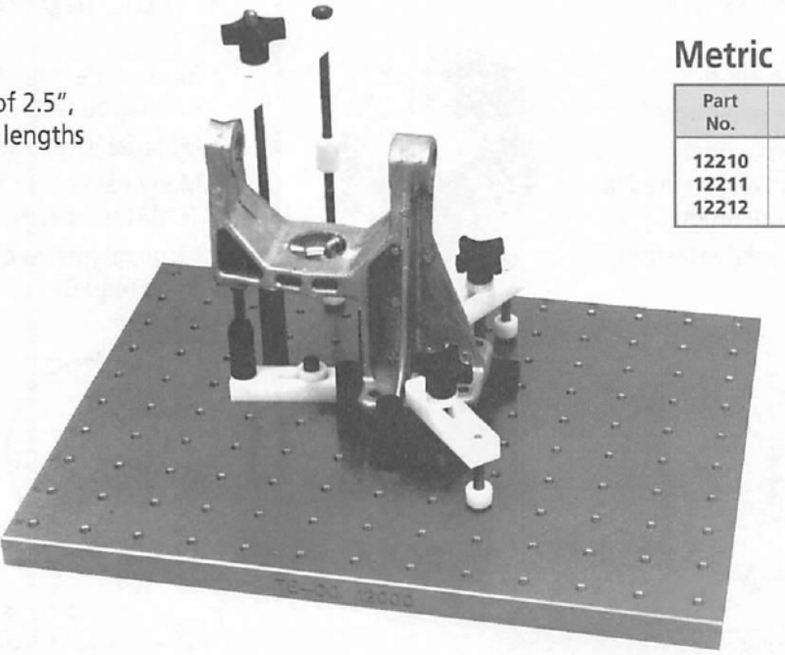

English

Part No.	Thread Size
*12110	1/4-20
12111	5/16-18
12112	3/8-16

*Composition differs slightly

Metric

Part No.	Thread Size
12210	8mm
12211	10mm
12212	12mm

Plastic clamps are NOT recommended for machining purposes

Get quote
Angic Global Solutions 1-888-872-0690
https://www.AngicGlobal.com Sales@AngicGlobal.com

Coordinate Measuring Machine Clamp Kits

- Kits are used to properly hold down workpiece during workpiece inspection. see individual components.

Optional T-Slot Nuts available (see charts at bottom of page).

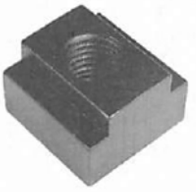



Kits available in both English and Metric!

English Coordinate Measuring Machine Clamp Kits

Kit Contains:

- 8 Coupling Nuts
- 8 Flange Nuts
- 2 Serrated End Clamps: 2-1/2" O.A.L.
- 2 Serrated End Clamps: 4" O.A.L.
- 2 Serrated End Clamps: 6" O.A.L.
- 2 Steel Step Blocks (Max. Height 1-5/8")
- 2 Steel Step Blocks (Max. Height 2-1/2")
- 2 Steel Step Blocks (Max. Height 6")
- 24 Studs: 4 Each of 3", 4", 5", 6", 7" & 8" long
- 1 Holder

Part No.	Stud Size	Step Blocks (2 each)	Serrated End Clamps (2 each)
12104	1/4-20	40102 40103 40104	30501 30502 30503
12105	5/16-18	40102 40103 40104	30501 30502 30503
12106	3/8-16	40102 40103 40104	30501 30502 30503

Optional T-Slot Nuts

Part No.	Stud Size	Table T-Slot English	Table T-Slot Metric
41402	1/4-20	3/8	10mm
41403	5/16-18	3/8	10mm
41404	3/8-16	7/16	12mm

Metric Coordinate Measuring Machine Clamp Kits

Kit Contains:

- 8 Coupling Nuts
- 8 Flange Nuts
- 2 Serrated End Clamps: 64mm O.A.L.
- 2 Serrated End Clamps: 102mm O.A.L.
- 2 Serrated End Clamps: 152mm O.A.L.
- 2 Steel Step Blocks (Max. Height 41mm)
- 2 Steel Step Blocks (Max. Height 64mm)
- 2 Steel Step Blocks (Max. Height 152mm)
- 24 Studs: 4 Each of 80mm, 110mm, 140mm, 155mm, 175mm & 200mm long
- 1 Holder

Part No.	Stud Size	Step Blocks (2 each)	Serrated End Clamps (2 each)
12205	M8 x 1.25	40102 40103 40104	30501 30502 30503
12206	M10 x 1.50	40102 40103 40104	30501 30502 30503
12207	M12 x 1.75	40102 40103 40104	30504 30505 30506

Optional T-Slot Nuts

Part No.	Stud Size	Table T-Slot English	Table T-Slot Metric
61403	M8 x 1.25	10mm	7/16
61404	M10 x 1.50	12mm	1/2
61406	M12 x 1.75	14mm	9/16

ANGIC GLOBAL SOLUTIONS

Get quote

332-1274 • ww

Angic Global Solutions 1-888-872-0690
https://www.AngicGlobal.com Sales@AngicGlobal.com

Tapped Hole Location Gages



- Material:
  - Body: 52100 Steel
  - Collar:12L14 Steel
- Black oxide finish on collar only
- Two piece construction
- Use to accurately measure the distance between two tapped holes in a workpiece
- Shaft size is the same diameter on all gages to simplify calculation of the hole spread
  - All diameters are concentric within .0002 T.I.R.
- **English:**
  - Thread Class: 3A
- **Metric:**
  - Thread Class: 6G

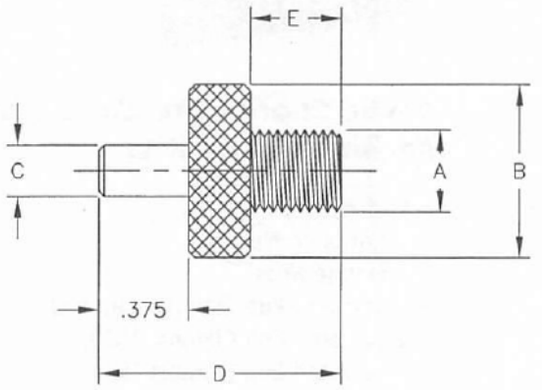

Part No.	Thread A	Dia. B	Dia. C*	D	E	Weight (lbs/100pcs)
10321	6-40	5/16	.2500	7/8	1/4	1
10309	10-32	5/16	.2500	7/8	1/4	1
10310	1/4-28	3/8	.2500	1	3/8	2
10311	5/16-24	1/2	.2500	1	3/8	3
10312	3/8-24	1/2	.2500	1	3/8	3
10313	7/16-20	7/8	.2500	1	3/8	4
10314	1/2-20	7/8	.2500	1	3/8	6
10315	5/8-18	7/8	.2500	1	3/8	6

*C Diameter: +.0002/-.0000

UNC Sizes

Part No.	Thread A	Dia. B	Dia. C*	D	E	Weight (lbs/100pcs)
10317	2-56	5/16	.2500	7/8	5/16	1
10318	4-40	5/16	.2500	7/8	5/16	1
10319	5-40	5/16	.2500	7/8	5/16	1
10320	6-32	5/16	.2500	7/8	5/16	1
10322	8-32	5/16	.2500	7/8	5/16	1
10301	10-24	5/16	.2500	7/8	5/16	1
10302	1/4-20	3/8	.2500	1	3/8	3
10303	5/16-18	1/2	.2500	1	3/8	3
10304	3/8-16	1/2	.2500	1	3/8	3
10305	7/16-14	7/8	.2500	1	3/8	4
10306	1/2-13	7/8	.2500	1	3/8	6
10307	5/8-11	7/8	.2500	1	3/8	6
10330	3/4-10	1	.2500	1-1/8	1/2	12

*C Diameter: +.0002/-.0000

Metric Sizes

Part No.	Thread A	Dia. B	Dia. C*	D	E	Weight (lbs/100pcs)
11101	M1.6 x .35	7.95	6.35	22	6.35	0.90
11103	M2.0 x .40	7.95	6.35	22	6.35	1.00
11105	M2.5 x .45	7.95	6.35	22	6.35	1.00
11107	M3.0 x .50	7.95	6.35	22	6.35	1.00
11109	M4.0 x .70	7.95	6.35	22	6.35	1.00
11111	M5.0 x .80	9.53	6.35	22	6.35	1.40
11113	M6.0 x 1.00	9.53	6.35	22	6.35	1.50
11121	M8.0 x 1.25	12.7	6.35	28	12.70	2.70
11123	M10 x 1.50	12.7	6.35	28	12.70	4.50
11125	M12 x 1.75	22.23	6.35	28	12.70	5.50
11127	M16 x 2.0	22.23	6.35	28	12.70	7.50
11129	M20 x 2.50	25.4	6.35	28	12.70	12.00

*C Diameter: +.0002/-.0000

English Tapped Hole Location Gage Kits

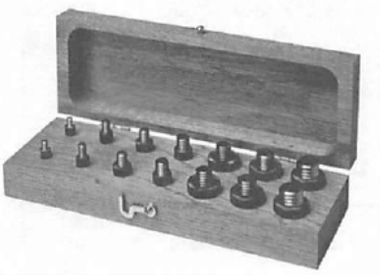

- Each kit includes a wooden storage box
- Special kits can be assembled to meet your requirements.

UNF Kit

Part No.	Weight (lbs/kit)	Thread	2 Each
10316	1	10-32	10309
		1/4-28	10310
		5/16-24	10311
		3/8-24	10312
		7/16-20	10313
		1/2-20	10314
		5/8-18	10315

UNC Kit

Part No.	Weight (lbs/kit)	Thread	2 Each
10308	1	10-24	10301
		1/4-20	10302
		5/16-18	10303
		3/8-16	10304
		7/16-14	10305
		1/2-13	10306
		5/8-11	10307

Part No.	Weight (lbs/kit)	Thread	2 Each
10323	1	2-56	10317
		4-40	10318
		5-40	10319
		6-32	10320
		6-40	10321
		8-32	10322

Get quote
Angic Global Solutions 1-888-872-0690
https://www.AngicGlobal.com Sales@AngicGlobal.com

Premium Short Shank Inspection Balls

Used as reference points for inspection applications in conjunction with Coordinate Measuring Machines to accurately measure the workpiece.

- Material: 8620 Steel
- Case hardened
- Concentricity of ball to shank: .0001 T.I.R.



One-piece construction

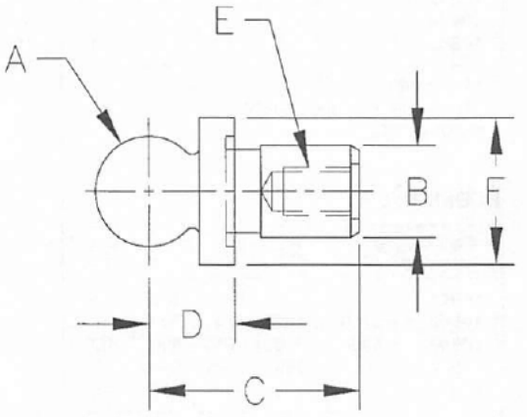

Part No.	Dia. A*	Dia. B**	C	D***	Thread E	Dia. F	Weight (lbs/100pcs)
10601	0.2500	0.1247	0.58	.2000		1/4	1
10602	0.3750	0.1872	0.74	.3000		3/8	1
10603	0.3750	0.3125	0.74	.3000	8-32	1/2	3
10604	0.5000	0.2497	0.63	.3125	6-32	1/2	3
10605	0.5000	0.2497	0.93	.4000	6-32	1/2	3
10606	0.5000	0.2497	0.88	.5000	6-32	1/2	3
10607	0.5000	0.3750	1.31	.3750	10-24	5/8	6
10608	0.6250	0.3122	1.08	.4500	8-32	5/8	6
10609	0.6250	0.3750	1.42	.4500	10-24	5/8	7
10610	0.6875	0.3750	1.47	.5000	10-24	3/4	9
10611	0.7500	0.3750	1.53	.5625	10-24	3/4	13
10612	1.0000	0.5000	1.64	.7000	10-24	1	25

*A Diameter: +.0000/-.0002
**B Diameter: +.0000/-.0002
***D: +-.0002

Premium Short Shank Inspection Ball Kit

- Each kit includes a wooden storage box
- Special kits can be assembled to meet your requirements.

Part No.	2 Each	
10613	10601 10602 10603 10604	10605 10606 10608

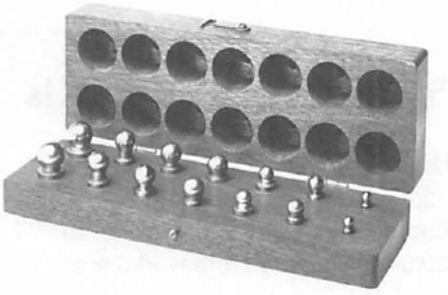

Precision Balls (Precision Slip Fit Shoulder Balls)

Used as reference points for inspection applications in conjunction with Coordinate Measuring Machines to accurately measure the workpiece.

- Hardened and ground steel (440 Stainless)
- Concentricity of ball to shank: .0002 T.I.R.

Two-piece construction



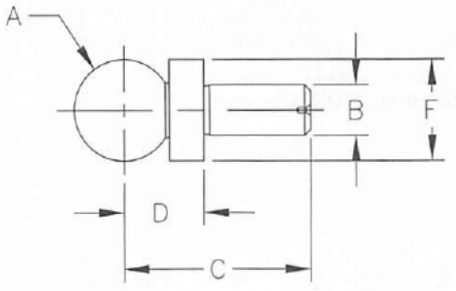

Part No.	Dia. A*	Dia. B**	C	D***	Dia. F	Weight (lbs/100pcs)
10850	0.25000	0.1247	9/16	.2000	1/4	1
10851	0.37500	0.1872	3/4	.3000	3/8	1
10852	0.50000	0.2497	15/16	.4000	1/2	3
10853	0.62500	0.3122	1-1/16	.4500	5/8	6
10854	0.75000	0.3747	1-1/4	.5000	3/4	10
10855	0.87500	0.4372	1-7/16	.6000	7/8	7
10856	1.00000	0.4997	1-5/8	.7000	1	24

*A Diameter: +-.0005
**B Diameter: +.0000/-.0002
***D: +-.0002

ANGIC GLOBAL SOLUTIONS
Get quote
32-1274 • ww
Angic Global Solutions 1-888-872-0690
https://www.AngicGlobal.com Sales@AngicGlobal.com

Tooling Balls
(Shoulder Tooling Balls)



One-piece construction

Used as reference points for inspection applications in conjunction with Coordinate Measuring Machines to accurately measure the workpiece

- Hardened and ground steel (8620 steel)
- Concentricity of Ball to Shank: .0002 T.I.R.

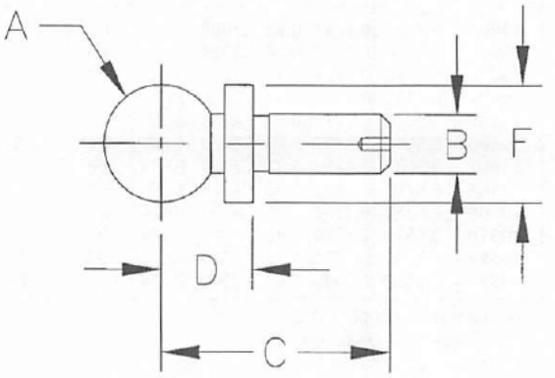

Slip Fit

Part No.	Dia. A*	Dia. B**	C	D***	Dia. F	Weight (lbs/100pcs)
10801	0.2500	0.1250	9/16	.2000	1/4	1
10802	0.3750	0.1875	3/4	.3000	3/8	1
10803	0.5000	0.2500	15/16	.4000	1/2	3
10804	0.5000	0.2500	1-3/8	.5000	1/2	4
10805	0.7500	0.3750	1-1//4	.5000	3/4	10

*A Diameter: +-.0002
**B Diameter: +.0000/-.0004
***D: +-.0002

Press Fit

Part No.	Dia. A*	Dia. B**	C	D***	Dia. F	Weight (lbs/100pcs)
10901	0.2500	0.1253	9/16	.2000	1/4	1
10902	0.3750	0.1878	3/4	.3000	3/8	1
10903	0.5000	0.2503	15/16	.4000	1/2	3
10904	0.5000	0.2503	1-3/8	.5000	1/2	4
10905	0.7500	0.3753	1-1//4	.5000	3/4	10

*A Diameter: +-.0002
**B Diameter: +.0003/-.0000
***D: +-.0002

Standard Tooling Balls



One-piece construction

Used as reference points for inspection applications in conjunction with Coordinate Measuring Machines to accurately measure the workpiece

- Hardened and ground steel (8620 steel)
- Concentricity of Ball to Shank: .0002 T.I.R.

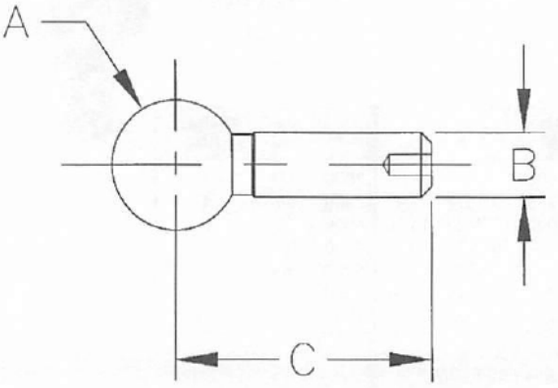

Slip Fit

Part No.	Dia. A*	Dia. B**	C	Weight (lbs/100pcs)
11201	0.2500	0.1250	9/16	1
11202	0.3750	0.1875	3/4	1
11203	0.5000	0.2500	15/16	3
11204	0.5000	0.2500	1-1/2	3
11205	0.5000	0.3750	1-1/2	8

*A Diameter: +-.0002
**B Diameter: +.0000/-.0004

Get quote
Angic Global Solutions 1-888-872-0690
https://www.AngicGlobal.com Sales@AngicGlobal.com

Construction Balls
(Shoulder Construction Balls)

Used as reference points for inspection applications in conjunction with Coordinate Measuring Machines to accurately measure the workpiece

- Hardened and ground steel (8620 steel)
- Concentricity of ball to shank: .0002 T.I.R.



One-piece construction

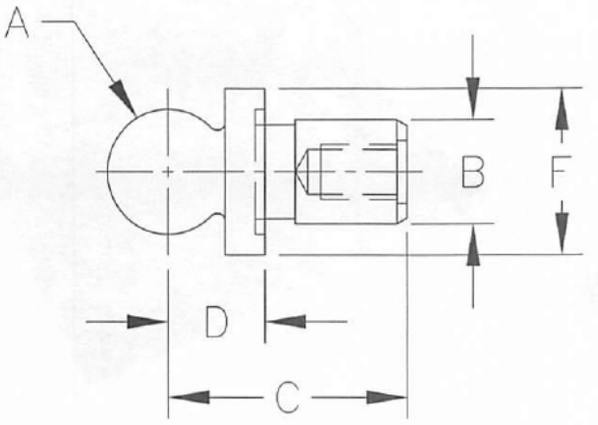

English

Part No.	Dia. A*	Dia. B**	C	D***	Dia. F	Weight (lbs/100pcs)
11001*	.5000	.2500	5/8	0.3125	1/2	3
11002	.5000	.2500	5/8	0.3125	1/2	3

*A Diameter: +-.0002
**B Diameter: +.0000/-.0004
***D: +-.0002
* 6-32 UNC-2B x 3/16 deep tapped shank as shown.

Metric

Part No.	Dia. A*	Dia. B**	C	D***	Dia. F	Weight (lbs/100pcs)
11020	6mm	3mm	16mm	6mm	6mm	1
11021	10mm	5mm	20mm	10mm	10mm	3
11022	12mm	6mm	22mm	12mm	12mm	3

*A Diameter: +-.005mm
**B Diameter: +.000/-.010mm
***D: +-.005

Carbide Ball

Used as reference points for inspection applications in conjunction with Coordinate Measuring Machines to accurately measure the workpiece

- Material:
  - Ball: Carbide
  - Shank: 440 Stainless
- Weight per 100 pcs.: less than one pound
- Concentricity of ball to shank: .0002 T.I.R.



Two-piece construction

Part No.
11070

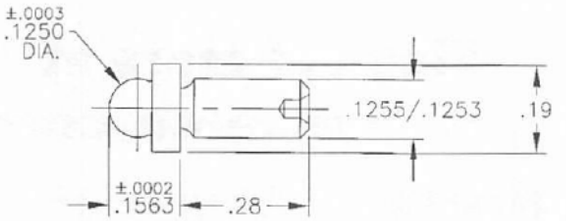

Tooling Ball Cover

- Protects tooling and inspection balls from damage between operations.
- Low cost solution to protect your tooling ball investment
- Made of a durable, high impact resistant Polymer
- Mounts over .875" diameter or smaller tooling ball directly into jig fixture with two number 10 screws



Part No.	Max. Tooling Ball Size
10600	.875" Dia. Ball

ANGIC GLOBAL SOLUTIONS
Get quote
32-1274 • ww
Angic Global Solutions 1-888-872-0690
https://www.AngicGlobal.com Sales@AngicGlobal.com

TE-CO

CMM Fixturing with Flexibility and Modularity

TE-CO's line of CMM fixturing is designed for easy assembly and high repeatability, eliminating the need to build dedicated fixtures. This system offers a highly accurate and flexible solution for holding parts while probing.

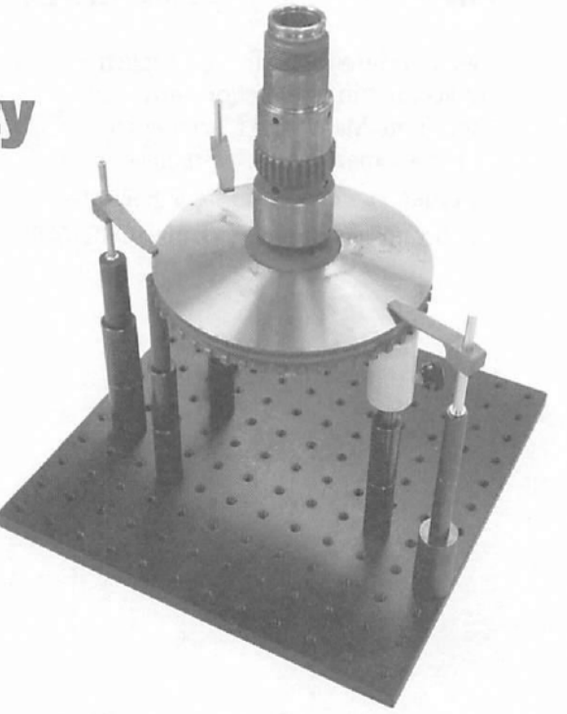

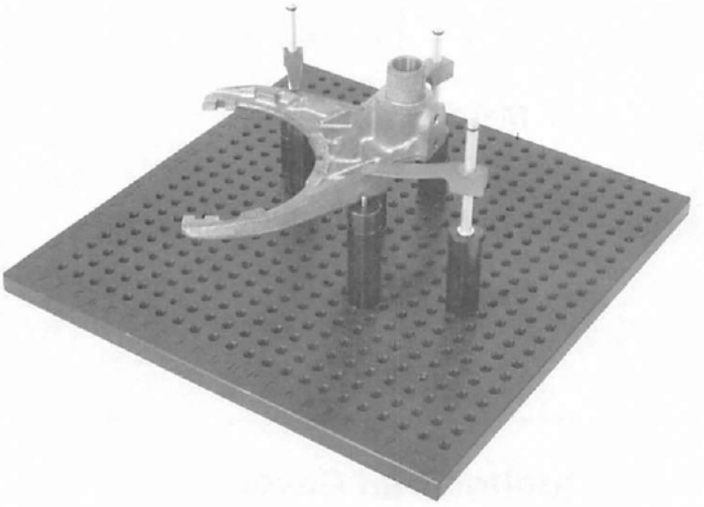

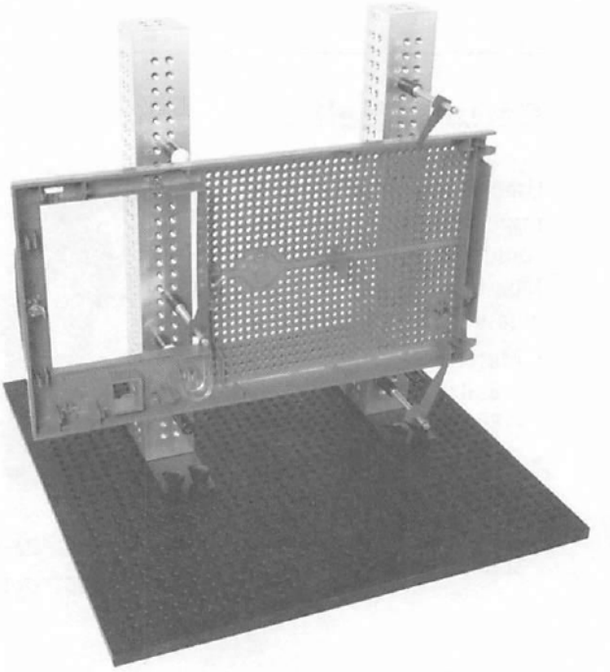

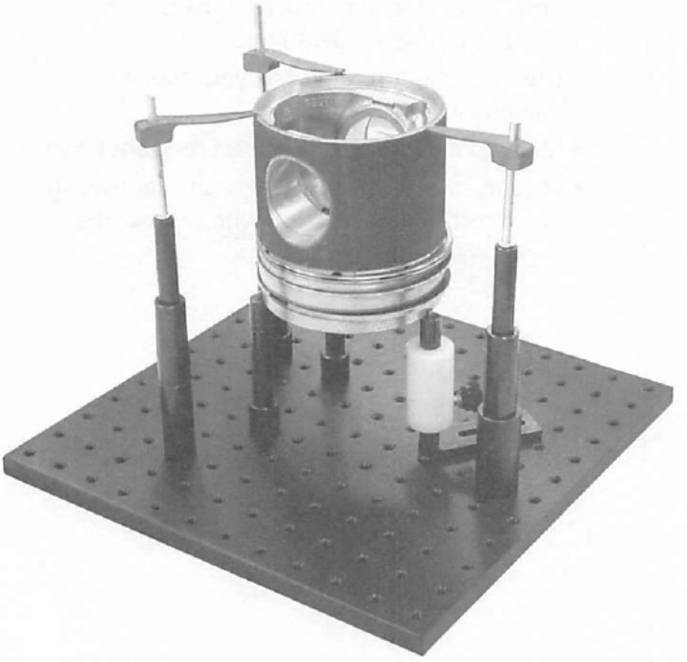

Find out more at www.te-co.com

Get quote

Angic Global Solutions 1-888-872-0690
https://www.AngicGlobal.com Sales@AngicGlobal.com

SPRING LOADED DEVICES



Ball Plungers..... 88-89

Press Fit Ball Plungers.....90

Standard Spring Plungers..... 91-93

Metric Spring Plungers.....93

Press Fit Spring Plungers.....94

Spring & Ball Wrenches.....94

Ball Buttons.....94

Posi Hex Plungers.....95

Hex Nose Plungers.....96

Short Spring Plungers.....97

Hand Retractables..... 98-102

Weldable Plungers.....103

Spring Stops.....104

Installation Information.....105

Inch Tap Drill Sizes.....105

Get quote

Angic Global Solutions 1-888-872-0690
https://www.AngicGlobal.com Sales@AngicGlobal.com

Ball Plungers

- Material:
  - Steel Body: 12L14 Steel
  - Stainless Steel Body: 303 Stainless Steel
  - Ball: 440 Stainless Steel or Nylon
- Smallest and lightest spring loaded device
- Side-load tolerant
- Controlled end forces
- Screwdriver installation
- Bodies are color coded to indicate end forces:
  - Plain or Zinc = Light Force
  - Black = Standard Force
  - Gold = Heavy Force

NYLON THREAD LOCKING ELEMENT IS OFFERED AS AN OPTION ON THESE PARTS.
To order ball plungers with a locking element, simply remove the "X" from the end of the part number (ex. 52821). Pricing is the same with or without locking element.



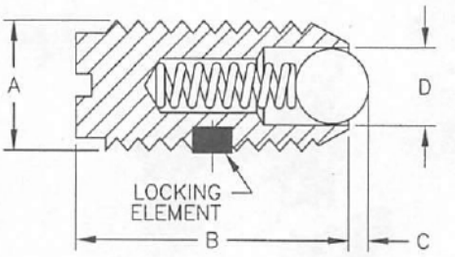

STEEL BODY			STAINLESS STEEL BODY									
Stainless Steel Ball Part No.	Nylon Ball Part No.	Body Color Type	Stainless Steel Ball Part No.	Nylon Ball Part No.	Body Color Type	End Force (lbs) Initial	End Force (lbs) Final	Thread A	B	C	Ball Dia. D	Weight (lbs/100pcs)
52821X	53821X	Black	52901X	53830X	Plain	.12	.50	4-48	3/16	.020	.062	.005
52822X	53822X	Black	52902X	53831X	Plain	.25	.75	5-40	1/4	.020	.062	.02
52823X	53823X	Black	52903X	53832X	Plain	.50	1.00	6-40	5/16	.023	.078	.02
52824X	53824X	Black	52904X	53833X	Plain	.50	1.25	8-36	11/32	.025	.093	.04
52825X	53825X	Black	52923X	53852X	Plain	.50	1.25	8-32	11/32	.025	.093	.04
52801X	53801X	Zinc	52905X	53834X	Plain	.50	1.50	10-32	33/64	.025	.093	.30
52802X	53802X	Black	52906X	53835X	Black	1.50	3.00	10-32	33/64	.025	.093	.30
52803X	53803X	Gold	52907X	53836X	Gold	2.00	5.00	10-32	33/64	.025	.093	.30
52804X	53804X	Zinc	52908X	53837X	Plain	2.00	4.00	1/4-20	17/32	.035	.125	.40
52805X	53805X	Black	52909X	53838X	Black	3.00	7.00	1/4-20	17/32	.035	.125	.40
52806X	53806X	Gold	52910X	53839X	Gold	4.00	12.00	1/4-20	17/32	.035	.125	.40
52807X	53807X	Zinc	52911X	53840X	Plain	2.00	4.50	5/16-18	37/64	.040	.156	.70
52808X	53808X	Black	52912X	53841X	Black	4.00	9.00	5/16-18	37/64	.040	.156	.70
52809X	53809X	Gold	52913X	53842X	Gold	6.00	17.00	5/16-18	37/64	.040	.156	.70
52810X	53810X	Zinc	52914X	53843X	Plain	2.50	5.00	3/8-16	5/8	.048	.187	1.20
52811X	53811X	Black	52915X	53844X	Black	5.00	10.00	3/8-16	5/8	.048	.187	1.20
52812X	53812X	Gold	52916X	53845X	Gold	6.00	21.00	3/8-16	5/8	.048	.187	1.20
52813X	53813X	Zinc	52917X	53846X	Plain	3.00	6.00	1/2-13	3/4	.072	.281	2.60
52814X	53814X	Black	52918X	53847X	Black	6.00	12.00	1/2-13	3/4	.072	.281	2.60
52815X	53815X	Gold	52919X	53848X	Gold	6.00	30.00	1/2-13	3/4	.072	.281	2.60
52816X	53816X	Zinc	52920X	53849X	Plain	4.50	9.00	5/8-11	63/64	.096	.375	5.00
52817X	53817X	Black	52921X	53850X	Black	9.00	18.00	5/8-11	63/64	.096	.375	5.00
52818X	53818X	Gold	52922X	53851X	Gold	7.00	50.00	5/8-11	63/64	.096	.375	5.00

Special sizes quoted upon request.

For information concerning installation, see page 105.

Metric

STEEL BODY			STAINLESS STEEL BODY								
Stainless Steel Ball Part No.	Nylon Ball Part No.	Body Color Type	Stainless Steel Ball Part No.	Nylon Ball Part No.	Body Color Type	End Force (lbs) Initial	End Force (lbs) Final	Thread A	B mm (in.)	C mm (in.)	Ball Dia. D mm (in.)
63901X	63961X	Black	64001X	64061X	Black	.90	2.25	M4 x 0.7	9 (.354)	.8 (.032)	2.5 (.098)
63920X	–	Black	–	–	–	.50	1.50	M5 x 0.8	13 (.518)	.6 (.023)	2.38 (.093)
63921X	–	Black	–	–	–	1.50	3.00	M5 x 0.8	13 (.518)	.6 (.023)	2.38 (.093)
63922X	–	Black	–	–	–	2.00	4.90	M5 x 0.8	13 (.518)	.6 (.023)	2.38 (.093)
63902X	63962X	Black	64002X	64062X	Black	2.00	2.90	M6 x 1.0	14 (.551)	1 (.039)	3.5 (.138)
63903X	63963X	Zinc	64003X	64063X	Plain	.45	1.35	M6 x 1.0	14 (.551)	1 (.039)	3.5 (.138)
63904X	63964X	Gold	64004X	64064X	Gold	6.25	8.95	M6 x 1.0	14(.551)	1 (.039)	3.5 (.138)
63905X	63965X	Black	64005X	64065X	Black	3.35	6.70	M8 x 1.25	16 (.630)	1.5 (.059)	5 (.196)
63906X	63966X	Zinc	64006X	64066X	Plain	1.11	2.25	M8 x 1.25	16 (.630)	1.5 (.059)	5 (.196)
63907X	63967X	Gold	64007X	64067X	Gold	8.95	13.40	M8 x 1.25	16 (.630)	1.5 (.059)	5 (.196)
63908X	63968X	Black	64008X	64068X	Black	4.45	7.80	M10 x 1.5	19 (.748)	2 (.079)	6 (.236)
63909X	63969X	Zinc	64009X	64069X	Plain	1.80	3.35	M10 x 1.5	19 (.748)	2 (.079)	6 (.236)
63910X	63970X	Gold	64010X	64070X	Gold	13.40	20.00	M10 x 1.5	19 (.748)	2 (.079)	6 (.236)
63911X	63971X	Black	64011X	64071X	Black	6.70	12.25	M12 x 1.75	22 (.866)	2.5 (.098)	8 (.315)
63912X	63972X	Zinc	64012X	64072X	Plain	2.25	4.50	M12 x 1.75	22 (.866)	2.5 (.098)	8 (.315)
63913X	63973X	Gold	64013X	64073X	Gold	16.75	25.65	M12 x 1.75	22 (.866)	2.5 (.098)	8 (.315)

Get quote
Angic Global Solutions 1-888-872-0690
https://www.AngicGlobal.com Sales@AngicGlobal.com

Ball Plungers (continued)

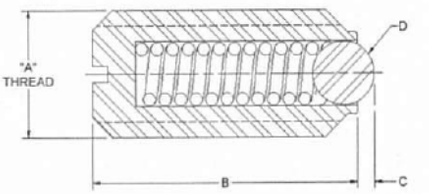

Standard End Pressure – Metric

Steel Part No.	Stainless Steel Part No.	End Force (Newtons) Initial	Final	A	B	C	D
69001X	69101X	1,5	3	M3x0.5	7	0,5	1,5
63901X	64001X	4	10	M4x0.7	9	0,8	2,5
69002X	69102X	6	11	M5x0.8	12	0,9	3
63902X	64002X	9	13	M6x1.0	14	1	3,5
63905X	64005X	15	30	M8x1.25	16	1,5	5
63908X	64008X	20	35	M10x1.5	19	2	6
63911X	64011X	30	55	M12x1.75	22	2,5	8
69003X	69103X	65	125	M16x2.0	24	3,5	10
69004X	69104X	80	160	M20x2.5	30	4,5	12

Heavy End Pressure – Metric

Steel Part No.	Stainless Steel Part No.	End Force (Newtons) Initial	Final	A	B	C	D
69010X	69110X	5	7	M3x0.5	7	0,5	1,5
69011X	69111X	12	22	M4x0.7	9	0,8	2,5
69012X	69112X	19	30	M5x0.8	12	0,9	3
63904X	64004X	28	40	M6x1.0	14	1	3,5
69013X	69113X	47	73	M8x1.25	16	1,5	5
69014X	69114X	66	100	M10x1.5	19	2	6
69015X	69115X	66	120	M12x1.75	22	2,5	8
69016X	69116X	90	180	M16x2.0	24	3,5	10
69017X	69117X	115	240	M20x2.5	30	4,5	12

Available without locking element only

NEW

Ball Plungers – Hexagon Socket

- Material:
  - Steel Body: ball in steel, spring steel D
- Surface finish:
  - Steel: black oxide finish
  - Stainless Steel Body: 300 series, ball 400 series, spring 300series
  - Available without locking element only



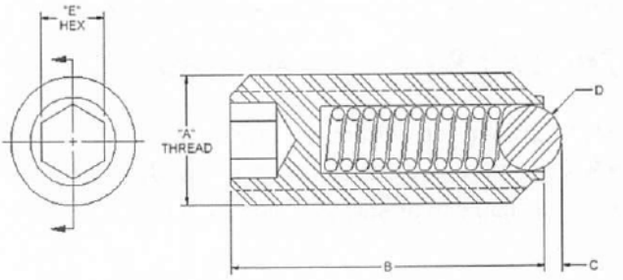

Standard End Pressure – Inch

Steel Part No.	Stainless Steel Part No.	End Force (lbs) Initial	Final	A	B	C	D	E
55001X	55101X	2.0	2.9	1/4-28	15	1	3.5	1/8
55002X	55102X	2.0	2.9	1/4-20	15	1	3.5	1/8
55003X	55103X	3.4	6.7	5/16-18	18	1.5	5	5/32
55004X	55104X	4.5	7.9	3/8-16	23	2	6	3/16
55005X	55105X	6.7	12.4	1/2-13	26	2.5	8	7/32
55006X	55106X	14.6	28.1	5/8-11	33	3.5	10	5/16

Heavy End Pressure – Inch

Steel Part No.	Stainless Steel Part No.	End Force (lbs) Initial	Final	A	D	B	C	E
55010X	55110X	6.3	9.0	1/4-28	15	1	3.5	1/8
55011X	55111X	6.3	9.0	1/4-20	15	1	3.5	1/8
55012X	55112X	10.6	16.4	5/16-18	18	1.5	5	5/32
55013X	55113X	14.8	22.5	3/8-16	23	2	6	3/16
55014X	55114X	14.8	27.0	1/2-13	26	2.5	8	7/322
55015X	55115X	20.2	40.5	5/8-11	33	3.5	10	5/16

Standard End Pressure – Metric

Steel Part No.	Stainless Steel Part No.	End Force (Newtons) Initial	Final	A	D	B	C	E
69201X	69301X	1,5	3	M3x0.5	1,5	9	0,5	1,5
69202X	69302X	4	10	M4x0.7	2,5	10	0,8	2
69203X	69303X	6	11	M5x0.8	3	14	0,9	2,5
69204X	69304X	9	13	M6x1.0	3,5	15	1	3
69205X	69305X	15	30	M8x1.25	5	18	1,5	4
69206X	69306X	20	35	M10x1.5	6	23	2	5
69207X	69307X	30	55	M12x1.75	8	26	2,5	6
69208X	69308X	65	125	M16x2.0	10	33	3,5	8
69209X	69309X	80	160	M20x2.5	12	43	4,5	10
69210X	69310X	90	180	M24x3.0	15	48	5,5	12

Heavy End Pressure – Metric

Steel Part No.	Stainless Steel Part No.	End Force (Newtons) Initial	Final	A	D	B	C	E
69221X	69321X	5	7	M3x0.5	1,5	9	0,5	1,5
69222X	69322X	12	22	M4x0.7	2,5	10	0,8	2
69223X	69323X	19	30	M5x0.8	3	14	0,9	2,5
69224X	69324X	28	40	M6x1.0	3,5	15	1	3
69225X	69325X	47	73	M8x1.25	5	18	1,5	4
69226X	69326X	66	100	M10x1.5	6	23	2	5
69227X	69327X	66	120	M12x1.75	8	26	2,5	6
69228X	69328X	90	180	M16x2.0	10	33	3,5	8
69229X	69329X	115	240	M20x2.5	12	43	4,5	10
69230X	69330X	130	270	M24x3.0	15	48	5,5	12

ANGIC GLOBAL SOLUTIONS
Get quote
332-1274 • ww
Angic Global Solutions 1-888-872-0690
https://www.AngicGlobal.com Sales@AngicGlobal.com

Press Fit Ball Plungers



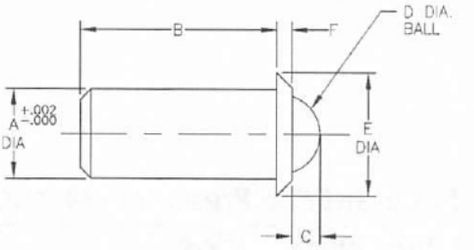

- Material:
  - Steel Body: 12L14 Steel
  - Stainless Steel Body: 303 Stainless Steel
  - Ball: 440 Stainless Steel
- Black Oxide Finish – Steel Only
- Ideal for installation in softer materials, such as aluminum, wood or plastic
- Sturdy shoulder provides a fixed seating position and positively resists detent force (installation hole can be counterbored to recess the shoulder)
- Use when a threaded hole would be impractical

STEEL BODY		STAINLESS BODY									
Stainless Steel Ball Part No.	Nylon Ball Part No.	Stainless Steel Ball Part No.	Nylon Ball Part No.	A	End Force (lbs) Initial	End Force (lbs) Final	B	C	Dia. D	Dia. E	F
53754	53762	53755	53780	.125	.4	1.3	.252	.035	.094	.187	.032
53756	53763	53757	53781	.125	.75	2.5	.252	.035	.094	.187	.032
53792	53794	53796	53798	.188	1.0	2.5	.39	.058	.156	.250	.040
53701	53764	53709	53782	.188	1.0	2.5	.410	.058	.156	.250	.035
53702	53766	53710	53784	.250	1.5	3.5	.480	.070	.188	.312	.044
53758	53768	53759	53786	.312	2.0	5.0	.643	.090	.250	.375	.045
53760	53769	53761	53787	.312	4.0	10.0	.643	.090	.250	.375	.045
53703	53770	53711	53788	.375	2.5	7.0	.790	.110	.312	.500	.078
53704	53772	53712	53790	.500	4.0	9.0	1.13	.161	.438	.688	.088
53793	53795	53797	53799	.188	2.0	5.0	.39	.058	.156	.250	.040
53705	53765	53713	53783	.188	2.0	5.0	.410	.058	.156	.250	.035
53706	53767	53714	53785	.250	3.0	7.0	.480	.070	.188	.312	.044
53707	53771	53715	53789	.375	5.0	14.0	.790	.110	.312	.500	.078
53708	53773	53716	53791	.500	8.0	18.0	1.13	.161	.438	.688	.088

Press Fit Ball Plungers – No Flange

- For sensitive and light duty applications
- Black thermoplastic or stainless steel body
- Ball available in plastic, steel and stainless steel



Small and lightweight!

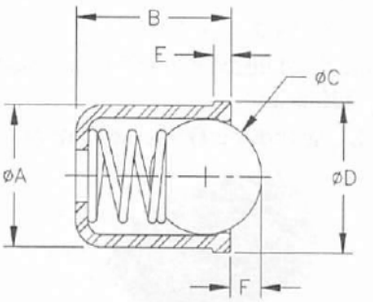

Stainless Steel Body & Ball – Metric

Stainless Steel Part No.	End Force (Newtons) Initial	End Force (Newtons) Final	A	B	Ball Dia. C	D	E	F
53670	3	7	4	5	3	4,6	1	0,8
53671	4	7	5	6	4	5,6	1	1
53672	6	12	6	7	5	6,5	1	1,5
53673	6	12	8	9	6,5	8,5	1	1,8
53674	10	20	10	13,5	8	12	2,5	2,7
53675	15	25	12	16	10	14	2,5	3,5

Plastic Body, Stainless Steel Ball – Metric

Plastic Body Part No.	End Force (Newtons) Initial	End Force (Newtons) Final	A	B	Ball Dia. C	D	E	F
53620	3	7	4	5	3	4,6	1	0,7
53621	4	7	5	6	4	5,6	1	1
53622	6	12	6	7	5	6,5	1	1,5
53623	6	12	8	9	6,5	8,5	1	1,8
53624	10	20	10	13,5	8	12	2,5	2,7
53625	15	25	12	16	10	14	2,5	3,5

Stainless Steel Body, Plastic Ball – Metric

Stainless Steel Part No.	End Force (Newtons) Initial	End Force (Newtons) Final	A	B	Ball Dia. C	D	E	F
53610	3	7	4	5	3	4,6	1	0,5
53611	4	7	5	6	4	5,6	1	0,6
53612	6	12	6	7	5	6,5	1	1,1
53613	6	12	8	9	6,5	8,5	1	1,5
53614	10	20	10	13,5	8	12	2,5	2,3
53615	15	25	12	16	10	14	2,5	3,1

Plastic Body & Ball – Metric

Plastic Body Part No.	End Force (Newtons) Initial	End Force (Newtons) Final	A	B	Ball Dia. C	D	E	F
53616	3	7	4	5	3	4,6	1	0,9
53617	4	7	5	6	4	5,6	1	1,2
53618	6	12	6	7	5	6,5	1	1,5
53619	6	12	8	9	6,5	8,5	1	2
53628	10	20	10	13,5	8	12	2,5	2,7
53629	15	25	12	16	10	14	2,5	3,5

Get quote
Angic Global Solutions 1-888-872-0690
https://www.AngicGlobal.com Sales@AngicGlobal.com

Standard Spring Plungers

- Steel Body Plungers:
  - 12L14 Steel Body, Black
    - Light End Force: Zinc Plated
    - Heavy End Force: Black Oxide Finish
- Stainless Steel Body Plungers:
  - 303 Stainless Steel Body
- Excellent wear resistance

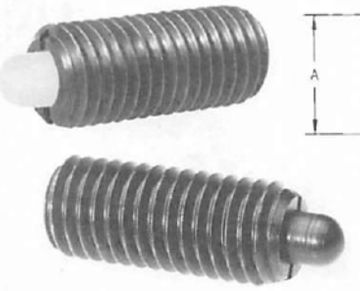

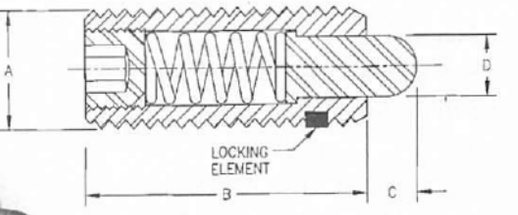

Carbon & Stainless Steel Nose

LIGHT END FORCE				HEAVY END FORCE								
Steel Part No.	Stainless Steel Part No.	End Force (lbs) Initial	Final	Steel Part No.	Stainless Steel Part No.	End Force (lbs) Initial	Final	Thread A	B	C	+.000 -.001 D	Weight (lbs/100pcs)
–	–			52002X	53202X	1.00	1.60	6-32	3/8	.062	.046	.10
52201X	53301X	.50	1.50	52001X	53201X	1.50	4.50	6-32	17/32	.062	.046	.10
52202X	53302X	.70	2.30	52003X	53203X	1.00	1.60	8-32	5/8	.093	.070	.22
52203X	53303X	1.30	2.70	52004X	53204X	2.70	7.30	10-32	3/4	.125	.093	.37
52217X	53308X	.25	2.00	52007X	53207X	2.90	11.10	1/4-20	3/4	.125	.119	.65
52204X	53305X	1.00	4.00	52005X	53205X	3.00	13.00	1/4-20	1	.187	.119	.75
52205X	53306X	1.00	4.00	52006X	53206X	3.00	13.00	1/4-28	1	.187	.119	.75
52206X	53304X	1.50	4.50	52008X	53208X	2.00	9.00	5/16-18	1	.187	.135	1.40
52207X	53307X	2.80	7.20	52009X	53209X	3.00	15.00	3/8-16	1-1/8	.187	.186	2.00
52208X	53309X	2.70	9.30	52010X	53210X	5.50	14.50	1/2-13	1-1/4	.250	.248	4.50
52209X	53310X	3.50	10.50	52011X	53211X	6.60	17.40	5/8-11	1-1/2	.312	.310	8.00
52210X	53311X	4.00	16.00	52012X	53212X	6.70	37.30	3/4-10	1-3/4	.312	.374	14.00
52211X	53312X	4.00	31.00	52013X	53213X	16.00	68.00	1-8	2-13/32	.500	.499	32.00

- Nose – Light End Force: Case Hardened 12L14 Steel, Zinc Plated
- Nose – Heavy End Force: Case Hardened 12L14 Steel, Black Oxide Finish

Delrin® Nose

LIGHT END FORCE: WHITE NOSE				HEAVY END FORCE: BLACK NOSE								
Steel Part No.	Stainless Steel Part No.	End Force (lbs) Initial	Final	Steel Part No.	Stainless Steel Part No.	End Force (lbs) Initial	Final	Thread A	B	C	+.000 -.002 D	Weight (lbs/100pcs)
52301X	53313X	.70	2.30	52101X	53220X	2.70	7.30	8-32	5/8	.093	.070	.20
52302X	53314X	1.30	2.70	52102X	53221X	2.90	11.10	10-32	3/4	.125	.093	.33
52309X	53321X	.25	2.00	52109X	53228X	3.00	13.00	1/4-20	3/4	.125	.119	.65
52303X	53315X	1.00	4.00	52103X	53222X	3.00	13.00	1/4-20	1	.187	.119	.70
52308X	53320X	1.00	4.00	52108X	53227X	3.00	13.00	1/4-28	1	.187	.119	.70
52304X	53316X	1.50	4.50	52104X	53223X	3.00	15.00	5/16-18	1	.187	.135	1.20
52305X	53317X	2.80	7.20	52105X	53224X	5.50	14.50	3/8-16	1-1/8	.187	.186	1.80
52306X	53318X	2.70	9.30	52106X	53225X	6.60	17.40	1/2-13	1-1/4	.250	.248	3.80
52307X	53319X	3.50	10.50	52107X	53226X	10.60	25.50	5/8-11	1-1/2	.312	.310	7.00

- Nose – Light End Force: White Delrin
- Nose – Heavy End Force: Black Delrin

Phenolic Nose

LIGHT END FORCE			HEAVY END FORCE							
Steel Part No.	End Force (lbs) Initial	Final	Steel Part No.	End Force (lbs) Initial	Final	Thread A	B	C	+.000 -.002 D	Weight (lbs/100pcs)
57409X	0.70	2.30	57401X	2.70	7.30	8-32	5/8	.093	.070	.20
57410X	1.30	2.70	57402X	2.90	11.10	10-32	3/4	.125	.092	.33
57411X	1.00	4.00	57403X	3.00	13.00	1/4-20	1	.187	.118	.70
57412X	1.00	4.00	57404X	3.00	13.00	1/4-28	1	.187	.118	.70
57413X	1.50	4.50	57405X	3.00	15.00	5/16-18	1	.187	.135	1.20
57414X	2.80	7.20	57406X	5.50	14.50	3/8-16	1-1/8	.187	.187	1.80
57415X	2.70	9.30	57407X	6.60	17.40	1/2-13	1-1/4	.250	.248	3.80
			57408X	10.50	25.50	5/8-11	1-1/2	.312	.310	7.00

- Nose – Brown Phenolic
- Ideal for aluminum, brass, or any soft easily marred material
- High tensile strength

Special sizes quoted upon request.

For information concerning installation, see page 105.

NYLON THREAD LOCKING ELEMENT IS OFFERED AS AN OPTION ON THESE PARTS

To order ball plungers with a locking element, simply remove the "X" from the end of the part number.

GENERAL INFORMATION

- Metric sizes available, see page 92
- Typical uses: positioning, locating, ejecting, detents, contacts, lifters, insulators, and latches
- Easy installation

ANGIC GLOBAL SOLUTIONS

Get quote

332-1274 • ww

Angic Global Solutions 1-888-872-0690

https://www.AngicGlobal.com Sales@AngicGlobal.com

Spring Plungers – Pin Style Slotted

NEW

- Material:
  - Steel Body: ball in steel, spring steel D
- Surface finish:
  - Steel: black oxide finish
  - Stainless Steel Body: 300 series, ball 400 series, spring 300 series



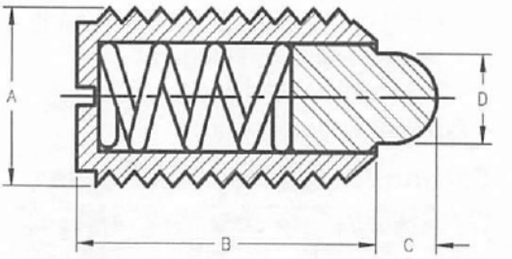

Available without locking element only

Standard End Pressure – Metric

Steel Part No.	Stainless Steel Part No.	End Force (Newtons) Initial	Final	A	B	C	D
69401X	69501X	6	20	M4	9	1,5	1,8
69402X	69502X	6	20	M5	12	2	2,4
69403X	69503X	7	20	M6	14	2	2,7
69404X	69504X	15	30	M8	16	2	4
69405X	69505X	20	35	M10	19	2,5	4,5
69406X	69506X	30	55	M12	22	3,5	6
69407X	69507X	45	100	M16	24	4,5	8,5
69003X	69508X	60	120	M20	30	6,5	10

Light End Pressure – Metric

Steel Part No.	Stainless Steel Part No.	End Force (Newtons) Initial	Final	A	B	C	D
69420X	69520X	3	10	M4	9	1,5	1,8
69421X	69521X	3	10	M5	12	2	2,4
69422X	69522X	4	10	M6	14	2	2,7
69423X	69523X	7	15	M8	16	2	4
69424X	69524X	9	16	M10	19	2,5	4,5
69425X	69525X	14	26	M12	22	3,5	6
69426X	69526X	22	50	M16	24	4,5	8,5
69427X	69527X	30	60	M20	30	6,5	10

Spring Plungers – Hexagon Socket Steel Body

NEW

- Material: Steel Body quality class 5.8, pressure pin in steel or plastic, spring in spring steel D
- Finish: Steel with black oxide finish, pressure pin in steel, hardened



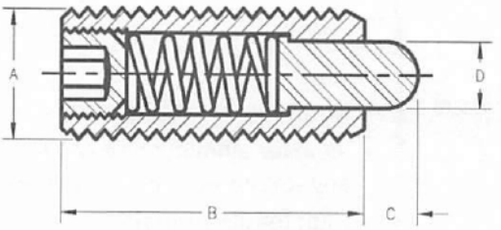

Available without locking element only

Heavy End Pressure – Metric

Steel Pin Part No.	End Force (Newtons) Initial	Final	A	B	C	D
69620X	3	10	M5	18	2,3	2,4
69621X	3	10	M6	20	2,5	2,7
69622X	4	10	M8	22	3	3,5
69623X	7	15	M10	22	3	4
69624X	9	16	M12	28	4	6
69625X	14	26	M16	32	5	7,5
69626X	22	50	M20	40	7	10
69627X	30	60	M24	52	10	12

Standard End Pressure – Metric

Steel Pin Part No.	Plastic Pin Part No.	End Force (Newtons) Initial	Final	A	B	C	D
69601X	69651X	0,5	3	M3	10	1,5	1
69602X	69652X	5	16	M4	15	1,5	1,5
69603X	69653X	6	20	M5	18	2,3	2,4
63705X	69654X	7	20	M6	20	2,5	2,7
63706X	69655X	9	35	M8	22	3	3,5
63707X	69656X	9	35	M10	22	3	4
63708X	69657X	10	55	M12	28	4	6
69604X	69658X	45	100	M16	32	5	7,5
69605X	-	60	120	M20	40	7	10
69606X	-	80	160	M24	52	10	12

Light End Pressure – Metric

Steel Pin Part No.	Plastic Pin Part No.	End Force (Newtons) Initial	Final	A	B	C	D
69610X	69660X	2	7	M4	15	1,5	1,5
69611X	69661X	3	10	M5	18	2,3	2,4
69612X	69662X	3	9	M6	20	2,5	2,7
69613X	69663X	4	16	M8	22	3	3,5
69614X	69664X	4	16	M10	22	3	4
69615X	69665X	5	27	M12	28	4	6
69616X	69666X	20	45	M16	32	5	7,5

Get quote
Angic Global Solutions 1-888-872-0690
https://www.AngicGlobal.com Sales@AngicGlobal.com

Spring Plungers – Hexagon Socket Stainless Steel Body



- Material: Body 1.4305, pressure pin 1.4034 or plastic, spring 1.4310
- Finish: Stainless steel body with natural finish, pressure pin in stainless steel, hardened

NEW

Available without locking element only

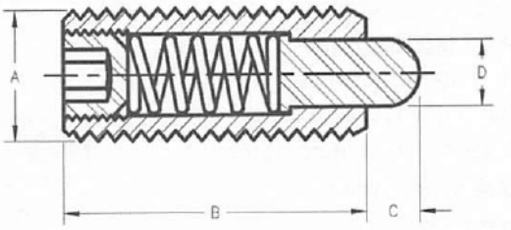

Standard End Pressure – Metric

Stainless Pin Part No.	Plastic Pin Part No.	End Force (Newtons) Initial	Final	A	B	C	D
69701X	**69751X**	0,5	3	M3	10	1,5	1
69702X	**69752X**	5	16	M4	15	1,5	1,5
69703X	**69753X**	5	17	M5	18	2,3	2,4
63704X	**69754X**	6	17	M6	20	2,5	2,7
63705X	**69755X**	7	29	M8	22	3	3,5
63706X	**69756X**	8	31	M10	22	3	4
63707X	**69757X**	10	47	M12	28	4	6
69608X	**69758X**	45	100	M16	32	5	7,5

Heavy End Pressure – Metric

Stainless Pin Part No.	End Force (Newtons) Initial	Final	A	B	C	D
69801X	9	26	M5	18	2,3	2,4
69802X	11	35	M6	20	2,5	2,7
69803X	15	48	M8	22	3	3,5
69804X	15	58	M10	22	3	4
69805X	19	74	M12	28	4	6

Metric Spring Plungers



- Material:
  - Steel Body: 12L14 Steel, Black Oxide Finish
  - Stainless Steel Body: 303 Stainless Steel
  - Steel Nose: 12L14 Steel, Black Oxide Finish
  - Stainless Steel Nose: 303 Stainless Steel
- Many sizes conform to TCMAI standards
- All dimensions in metric format

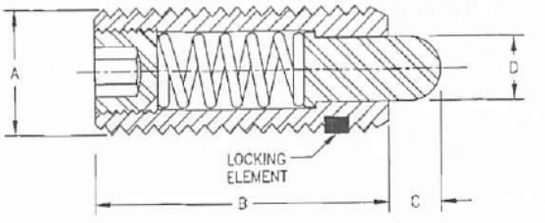

Steel Part No.	Stainless Steel Part No.	End Force (Newtons) Initial	Final	Thread A	B mm (in.)	C mm (in.)	+.000/-.025 D mm (in.)
63701X	**63720X**	4.00	11.15	M6 x 1.0	20 (.787)	2.5 (.098)	2.7 (.106)
63702X	**63721X**	5.60	15.60	M8 x 1.25	22 (.866)	3 (.118)	3.5 (.138)
63703X	**63722X**	5.60	15.60	M10 x 1.50	22 (.866)	3 (.118)	4 (.157)
63704X	**63723X**	10.00	24.50	M12 x 1.75	28 (1.102)	4 (.157)	6 (.236)
63705X	**63724X**	1.60	4.50	M6 x 1.0	20 (.787)	2.5 (.098)	2.7 (.106)
63706X	**63725X**	2.00	7.80	M8 x 1.25	22 (.866)	3 (.118)	3.5 (.138)
63707X	**63726X**	2.00	7.80	M10 x 1.50	22 (.866)	3 (.118)	4 (.157)
63708X	**63727X**	2.25	12.30	M12 x 1.75	28 (1.102)	4 (.157)	6 (.236)

NYLON THREAD LOCKING ELEMENT IS OFFERED AS AN OPTION ON THESE PARTS

To order metric spring plungers with a locking element, simply remove the "X" at the end of the part number.

ANGIC GLOBAL SOLUTIONS
Get quote
832-1274 • w
Angic Global Solutions 1-888-872-0690
https://www.AngicGlobal.com Sales@AngicGlobal.com

SPRING LOADED DEVICES

Press Fit Spring Plungers

- Material:
  - Steel Body: 12L14 Steel
  - Stainless Steel Body: 303 Stainless Steel
  - Steel Plunger: 12L14 Steel
  - Stainless Steel Plunger: 303 Stainless Steel
- Ideal for installation in softer materials such as aluminum, wood, or plastic
- Withstands high temperatures
- No thread adjustment
- Longer travel



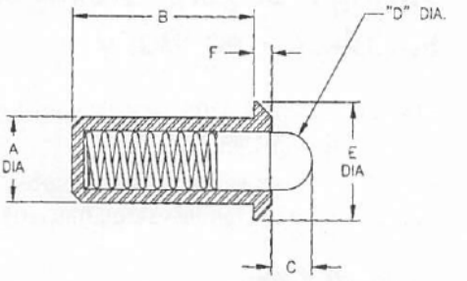

Steel Part No.	Stainless Steel Part No.	End Force (lbs)* Initial	Final	+.002 -.000 A	B	C	D	E	F
53601	**53650**	.75	2.00	.188	.441	.094	.121	.250	.044
53602	**53651**	1.25	3.00	.250	.521	.125	.168	.312	.055
53603	**53652**	2.50	7.00	.375	.788	.187	.234	.500	.096
53604	**53653**	4.00	9.00	.500	1.100	.250	.332	.688	.134
53605	**53654**	1.50	4.50	.188	.441	.094	.121	.250	.044
53606	**53655**	2.50	6.00	.250	.521	.125	.168	.312	.055
53607	**53656**	5.00	14.00	.375	.788	.187	.234	.500	.096
53608	**53657**	5.00	18.00	.500	1.100	.250	.332	.688	.134

Spring and Ball Plunger Wrenches



Designed to eliminate excessive spring compression during installation and removal of spring and ball plungers.

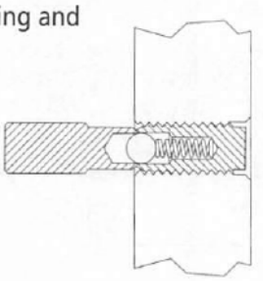

Part No.	Fits Following Spring and Ball Plunger Sizes Inches	MM	Weight (lbs/100pcs)
53001	6-32	–	1
53002	8-32	M4	1
53003	10-32	M5	1
53004	1/4-20	M6	1.5
53005	5/16-18	M8	3
53006	3/8-16	M10	3
53007	1/2-13	M12	5
53008	5/8-11	–	9
53009	3/4-10	–	13
53010	1-8	–	19

Stainless Steel Ball Buttons



The ideal mating detent for ball plungers or other similar applications. Hardened and ground 440C stainless steel.

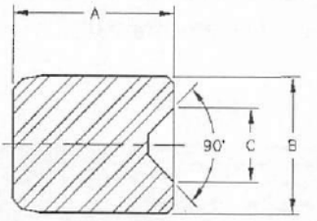

Part No.	For use with Ball Dia.	A	+.0002 -.0000 B	C
57501	.0620	1/8	.1075	.056
57502	.0780	1/8	.1175	.051
57503	.0938	3/16	.1614	.069
57504	.1250	1/4	.2034	.111
57505	.1560	5/16	.2559	.139
57506	.1875	3/8	.3284	.164
57507	.2813	1/2	.4378	.241
57508	.3750	5/8	.5472	.330

-1274 • www
ANGIC
Get quote
Angic Global Solutions 1-888-872-0690
https://www.AngicGlobal.com Sales@AngicGlobal.com

Posi Hex Plungers

- Material:
  - Steel Body: 12L14 Steel
  - Stainless Steel Body: 303 Stainless Steel
  - Steel Plunger: 12L14 Steel, Case Hardened
  - Stainless Steel Plunger: 303 Stainless Steel
- Heavy End Force: Black Oxide Finish
- Light End Force: Zinc Plated Nose
- Easy installation and removal
- Withstands high torque
- One-piece body – no set screw in back

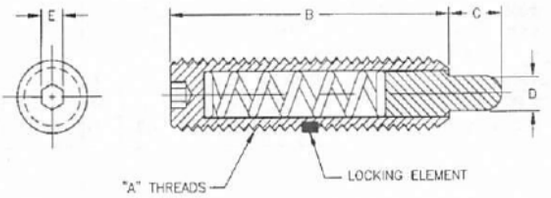

NYLON THREAD LOCKING ELEMENT IS OFFERED AS AN OPTION ON THESE PARTS

To order posi hex plungers with a locking element, simply remove the "X" at the end of the part number.

METRIC

Heavy End Force

STEEL BODY

Steel Nose Part No.	Blue Delrin Nose Part No.	End Force (lbs) Initial	End Force (lbs) Final	Thread A	B	C	D*	E
67001X	67080X	2.70	7.30	M4 x 0.7	16	2.5	1.78	2
67002X	67081X	2.90	11.10	M5 x 0.8	19	3.0	2.36	2.5
67003X	67082X	3.00	13.00	M6 x 1.0	25	5.0	3.02	3
67004X	67083X	3.00	15.00	M8 x 1.25	25	5.0	3.43	4
67005X	67084X	5.50	14.50	M10 x 1.5	29	5.0	4.72	5
67006X	67085X	6.60	17.40	M12 x 1.75	32	6.0	6.30	6
67007X	67086X	10.50	25.50	M16 x 2.0	38	8.0	7.87	8
67008X	67087X	6.70	37.30	M20 x 2.5	44	8.0	9.50	10

Light End Force

STEEL BODY

Steel Nose Part No.	White Delrin Nose Part No.	End Force (lbs) Initial	End Force (lbs) Final	Thread A	B	C	D*	E
67009X	67088X	.70	2.30	M4 x 0.7	16	2.5	1.78	2
67010X	67089X	1.30	2.70	M5 x 0.8	19	3.0	2.36	2.5
67011X	67090X	1.00	4.00	M6 x 1.0	25	5.0	3.02	3
67012X	67091X	1.50	4.50	M8 x 1.25	25	5.0	3.43	4
67013X	67092X	2.80	7.20	M10 x 1.5	29	5.0	4.72	5
67014X	67093X	2.70	9.30	M12 x 1.75	32	6.0	6.30	6
67015X	67094X	3.50	10.50	M16 x 2.0	38	8.0	7.87	8
67016X	67095X	4.00	16.00	M20 x 2.5	44	8.0	9.50	10

ENGLISH

Heavy End Force

STEEL BODY | STAINLESS BODY

Steel Nose Part No.	Blue Delrin Nose Part No.	Stainless Nose Part No.	End Force (lbs) Initial	End Force (lbs) Final	Thread A	B	C	D*	E
57001X	57085X	57015X	1.5	4.5	6-32	17/32	1/16	.045	1/16
57002X	–	57016X	1.0	1.6	6-32	1/2	1/16	.045	1/16
57003X	57086X	57017X	2.7	7.3	8-32	5/8	3/32	.070	1/16
57004X	57087X	57018X	2.9	11.1	10-32	3/4	1/8	.092	1/16
57005X	57088X	57019X	3.0	13.0	1/4-20	1	3/16	.118	5/64
57006X	57089X	57020X	3.0	13.0	1/4-28	1	3/16	.118	5/64
57007X	–	57021X	2.0	9.0	1/4-20	3/4	1/8	.118	5/64
57008X	57090X	57022X	3.0	15.0	5/16-18	1	3/16	.135	3/32
57080X	57091X	–	5.5	14.5	3/8-16	1-1/8	3/16	.186	3/16
57081X	57092X	–	6.6	17.4	1/2-13	1-1/4	1/4	.248	1/4
57082X	57093X	–	10.5	25.5	5/8-11	1-1/2	5/16	.310	5/16
57083X	–	–	6.7	37.3	3/4-10	1-3/4	5/16	.374	3/8



Light End Force

STEEL BODY | STAINLESS BODY

Steel Nose Part No.	White Delrin Nose Part No.	Stainless Nose Part No.	End Force (lbs) Initial	End Force (lbs) Final	Thread A	B	C	D*	E
57009X	57185X	57023X	0.5	1.5	6-32	17/32	1/16	.045	1/16
57010X	57186X	57024X	0.7	2.3	8-32	5/8	3/32	.070	1/16
57011X	57187X	57025X	1.3	2.7	10-32	3/4	1/8	.092	1/16
57012X	57188X	57026X	1.0	4.0	1/4-20	1	3/16	.118	5/64
57013X	57189X	57027X	1.0	4.0	1/4-28	1	3/16	.118	5/64
57014X	57190X	57028X	1.5	4.5	5/16-18	1	3/16	.135	3/32
57180X	57191X	–	2.8	7.2	3/8-16	1-1/8	3/16	.186	3/16
57181X	57192X	–	2.7	9.3	1/2-13	1-1/4	1/4	.248	1/4
57182X	57193X	–	3.5	10.5	5/8-11	1-1/2	5/16	.310	5/16
57183X	–	–	5.5	14.5	3/4-10	1-3/4	5/16	.374	3/8
57184X**	–	–	10.0	25.0	1-8	2-13/32	1/2	.499	3/8

*** INCH SIZES**
Steel Nose: +.000, -.001
Delrin Nose: +.000, -.002

*** METRIC SIZES**
Steel Nose: +.000, -.025
Delrin Nose: +.000, -.050

****Not available in one-piece design**

ANGIC GLOBAL SOLUTIONS
Get quote
832-1274 • w
Angic Global Solutions 1-888-872-0690
https://www.AngicGlobal.com Sales@AngicGlobal.com

Hex Nose Plungers

- Material: Steel, Black Oxide Finish
- Case hardened plunger
- Heavy End Force: Black Oxide Finish
- Light End Force: Zinc Plated Nose
- Hexagonal nose design allows for easy installation/removal with socket wrench



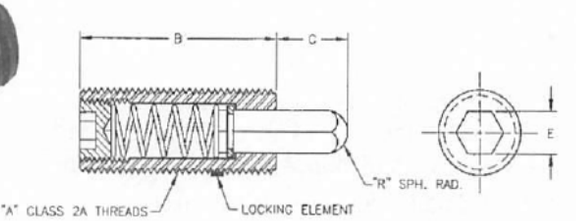

Heavy End Force

Part No.	End Force (lbs) Initial	Final	Thread A	B	C	E	R
57201X	3.0	13.0	1/4-20	1	3/16	1/8	.071
57202X	3.0	15.0	5/16-18	1	3/16	1/8	.071
57203X	5.5	14.5	3/8-16	1-1/8	3/16	3/16	.108
57204X	6.6	17.4	1/2-13	1-1/4	1/4	1/4	.144
57205X	10.5	25.5	5/8-11	1-1/2	5/16	5/16	.179
57206X	6.7	37.3	3/4-10	1-3/4	5/16	3/8	.215
57207X	16.0	68.0	1-8	2-13/32	1/2	1/2	.290

Light End Force

Part No.	End Force (lbs) Initial	Final	Thread A	B	C	E	R
57210X	1.0	4.0	1/4-20	1	3/16	1/8	.071
57211X	1.5	4.5	5/16-18	1	3/16	1/8	.071
57212X	2.8	7.2	3/8-16	1-1/8	3/16	3/16	.108
57213X	2.7	9.3	1/2-13	1-1/4	1/4	1/4	.144
57214X	3.5	10.5	5/8-11	1-1/2	5/16	5/16	.179
57215X	4.0	31.0	1-8	2-13/32	1/2	1/2	.290

NYLON THREAD LOCKING ELEMENT IS OFFERED AS AN OPTION ON THESE PARTS

To order hex nose plungers with a locking element, simply remove the "X" at the end of the part number.

93 -1274 • www
Get quote
Angic Global Solutions 1-888-872-0690
https://www.AngicGlobal.com Sales@AngicGlobal.com

Short Spring Plungers –Light and Heavy End Forces

Carbon & Stainless Steel Nose

- Excellent wear resistance



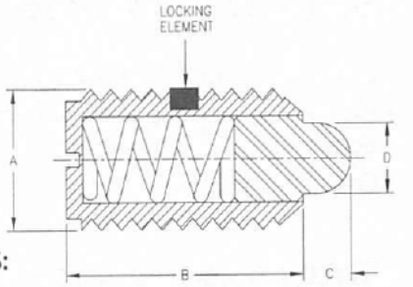

STEEL PLUNGERS:

- Body: 12L14 Steel, Black Oxide Finish
- Nose:
  - Light End Force: Case Hardened 12L14 Steel, Zinc Plated
  - Heavy End Force: Case Hardened 12L14 Steel, Black Oxide Finish

STAINLESS STEEL PLUNGERS:

- 303 Stainless Steel Body and Nose

LIGHT END FORCE				HEAVY END FORCE								
Steel Part No.	Stainless Steel Part No.	End Force (lbs) Initial	Final	Steel Part No.	Stainless Steel Part No.	End Force (lbs) Initial	Final	Thread A	B	C	+.000 -.001 D	Weight (lbs/100pcs)
52608X	**53508X**	.50	1.50	**52408X**	**53408X**	.50	3.50	6-32	3/8	.036	.046	.12
52609X	**53509X**	.50	1.50	**52409X**	**53409X**	1.50	4.75	8-32	7/16	.052	.070	.12
52601X	**53501X**	.50	1.50	**52401X**	**53401X**	1.50	4.75	8-36	7/16	.052	.069	.15
52602X	**53502X**	.75	2.50	**52402X**	**53402X**	1.75	6.25	10-32	15/32	.065	.093	.16
52603X	**53503X**	1.00	3.50	**52403X**	**53403X**	3.00	10.50	1/4-20	17/32	.078	.119	.40
52604X	**53504X**	1.50	4.00	**52404X**	**53404X**	3.75	15.50	5/16-18	9/16	.084	.135	.60
52605X	**53505X**	1.50	5.00	**52405X**	**53405X**	4.50	18.50	3/8-16	5/8	.110	.186	.90
52606X	**53506X**	1.75	5.50	**52406X**	**53406X**	5.00	28.00	1/2-13	3/4	.151	.248	2.50
52607X	**53507X**	2.00	8.50	**52407X**	**53407X**	7.00	50.00	5/8-11	1-1/16	.215	.310	6.00

NYLON THREAD LOCKING ELEMENT IS OFFERED AS AN OPTION ON THESE PARTS

To order short spring plungers with a locking element, simply remove the "X" at the end of the part number.

Delrin® Nose

- Insulating Delrin Plungers
- Ideal for aluminum, brass, or any soft, easily marred mating material



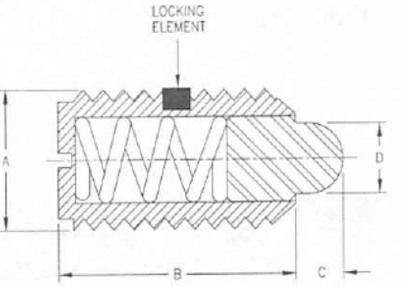

STEEL PLUNGERS:

- Body: 12L14 Steel, Clear Zinc Finish
- Nose:
  - Light End Force: White Delrin
  - Heavy End Force: Black Delrin

STAINLESS STEEL PLUNGERS:

- Body: 303 Stainless Steel
- Nose:
  - Light End Force: White Delrin
  - Heavy End Force: Black Delrin

LIGHT END FORCE: WHITE NOSE				HEAVY END FORCE: BLACK NOSE								
Steel Part No.	Stainless Steel Part No.	End Force (lbs) Initial	Final	Steel Part No.	Stainless Steel Part No.	End Force (lbs) Initial	Final	Thread A	B	C	+.000 -.002 D	Weight (lbs/100pcs)
52708X	**53527X**	0.50	1.50	**52508X**	**53427X**	0.50	3.50	6-32	3/8	.036	.046	.12
52709X	**53528X**	0.50	1.50	**52509X**	**53428X**	1.50	4.75	8-32	7/16	.052	.070	.12
52701X	**53520X**	0.50	1.50	**52501X**	**53420X**	1.50	4.75	8-36	7/16	.052	.070	.12
52702X	**53521X**	0.75	2.50	**52502X**	**53421X**	1.75	6.25	10-32	15/32	.065	.093	.16
52703X	**53522X**	1.00	3.50	**52503X**	**53422X**	3.00	10.50	1/4-20	17/32	.078	.119	.40
52704X	**53523X**	1.50	4.00	**52504X**	**53423X**	3.75	15.50	5/16-18	9/16	.084	.135	.60
52705X	**53524X**	1.50	5.00	**52505X**	**53424X**	4.50	18.50	3/8-16	5/8	.110	.186	.90
52706X	**53525X**	1.75	5.50	**52506X**	**53425X**	5.00	28.00	1/2-13	3/4	.151	.248	2.00
52707X	**53526X**	2.00	8.50	**52507X**	**53426X**	7.00	50.00	5/8-11	1-1/16	.215	.310	4.60

ANGIC GLOBAL SOLUTIONS
Get quote
332-1274 • ww
Angic Global Solutions 1-888-872-0690
https://www.AngicGlobal.com Sales@AngicGlobal.com

Hand Retractable Spring Plunger
Quick Release "Pull Ring"
Steel & Stainless Steel: Locking



- Designed for applications where space is limited
- Plunger can be completely withdrawn into the body and locked into a retracted position
- Chamfered plunger for easy alignment

NYLON THREAD LOCKING ELEMENT IS OFFERED AS AN OPTION ON THESE PARTS

To order with a locking element, simply remove the "X" at the end of the part number.

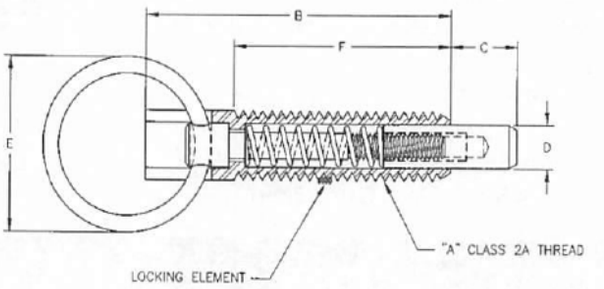

Steel* Black Part No.	Steel** Clear Part No.	Stainless Steel Part No.	End Force (lbs) Initial	End Force (lbs) Final	Thread A	B	C	D	E	F	Weight (lbs/100pcs)
54401X	**54414X**	**54405X**	1.00	2.50	1/4-20	1.14	0.250	0.155	.62	.8	2
54402X	**54415X**	**54406X**	2.00	4.00	3/8-16	1.68	0.375	0.233	.98	1.2	4
54403X	**54416X**	**54407X**	2.50	5.00	1/2-13	2.00	0.500	0.312	1.26	1.4	9

*Black Oxide Finish **Zinc Plated Clear Chromate Finish

Stubby Hand Retractable Spring Plunger
Quick Release "Pull Ring"
Steel & Stainless Steel: Non-Locking



- Designed for applications where space is limited
- Chamfered plunger for easy alignment
- Withstands side loading

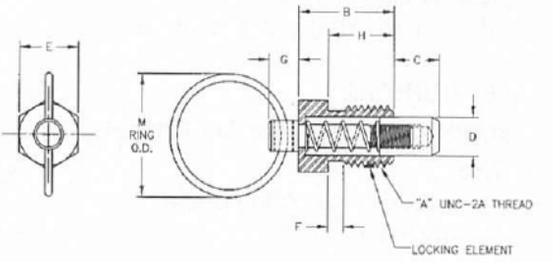

Steel** Part No.	Stainless Steel Part No.	End Force (lbs) Initial	End Force (lbs) Final	Thread A	B	C	D	Hex E	F	G	H	M
54450X	**54455X**	.50	2.0	1/4-20	.44	.19	.16	.25	*	.18	.31	.62
54451X	**54456X**	.50	2.0	1/4-20	.44	.19	.16	.25	*	.18	.31	.75
54452X	**54457X**	.75	3.0	3/8-16	.63	.28	.25	.38	.13	.19	.44	.75
54453X	**54458X**	1.0	4.0	1/2-13	.81	.38	.31	.50	.13	.25	.56	1.0
54454X	**54459X**	1.25	5.0	5/8-11	1.0	.44	.38	.62	.13	.31	.69	1.0

*No thread relief **Zinc Plated Clear Chromate Finish

Get quote
Angic Global Solutions 1-888-872-0690
https://www.AngicGlobal.com Sales@AngicGlobal.com

Delrin® Knob Hand Retractable Spring Plungers
Steel & Stainless Steel: Non-Locking



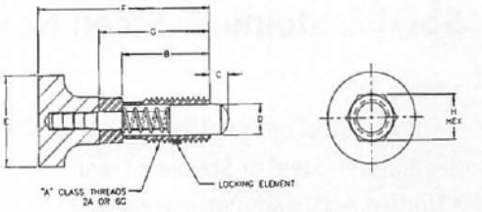

- Contoured knob
- Unified ANSI & metric threads

DELRIN KNOB / STEEL BODY:
- Body: Steel
- Nose: Case Hardened Steel
- Knob: Black Delrin

DELRIN KNOB / STAINLESS STEEL BODY:
- Body: Stainless Steel
- Nose: Stainless Steel
- Knob: White Delrin
- Ideal for food and medical applications

English

Steel Part No.	Stainless Steel Part No.	End Force (lbs) Initial	End Force (lbs) Final	Thread A	B	C	D	E	F	G	Hex H
58350X*	**58450X***	.12	.36	1/4-20	.50	.13	.16	.50	.97	.63	1/4
58351X	**58451X**	.25	2.0	3/8-16	.75	.18	.25	.75	1.4	.94	3/8
58352X	**58452X**	.50	1.75	1/2-13	1.0	.25	.31	1.0	1.9	1.25	1/2

*No thread relief in 1/4-20 thread size
Initial End Forces = +/-50% Final End Forces = +/-25%

Metric

Steel Part No.	Stainless Steel Part No.	End Force (lbs) Initial	End Force (lbs) Final	Thread A mm (in.)	B mm (in.)	C mm (in.)	D mm (in.)	E mm (in.)	F mm (in.)	G mm (in.)	Hex H mm (in.)
68350X*	**68450X***	.11	.34	M6 x 1.0	13 (.50)	3 (.118)	3 (.117)	12 (.48)	25 (.98)	16 (.63)	6 (.236)
68351X	**68451X**	.22	2.02	M10 x 1.5	20 (.79)	5 (.196)	6 (.236)	19 (.75)	38 (1.5)	25 (.98)	10 (.39)
68352X	**68452X**	.56	1.80	M12 x 1.75	25 (.98)	6 (.236)	8 (.314)	25 (.98)	47 (1.85)	31 (1.2)	12(.472)

*No thread relief in M6 thread size

NYLON THREAD LOCKING ELEMENT IS OFFERED AS AN OPTION ON THESE PARTS

To order with a locking element, simply remove the "X" at the end of the part number.

Delrin® Knob Hand Retractable Spring Plungers
Steel & Stainless Steel: Locking



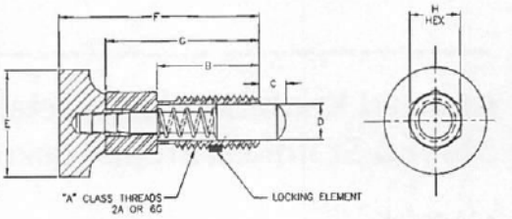

- Contoured knob
- Unified ANSI & metric threads

DELRIN KNOB / STEEL BODY:
- Body: Steel
- Nose: Case Hardened Steel
- Knob: Black Delrin

DELRIN KNOB / STAINLESS STEEL BODY:
- Body: Stainless Steel
- Nose: Stainless Steel
- Knob: White Delrin
- Ideal for food and medical applications

English

Steel Part No.	Stainless Steel Part No.	End Force (lbs) Initial	End Force (lbs) Final	Thread A	B	C	D	E	F	G	Hex H
58301X*	**58401X***	.12	.36	1/4-20	.50	.13	.16	.50	.97	.75	1/4
58302X	**58402X**	.25	2.0	3/8-16	.75	.18	.25	.75	1.4	1.13	3/8
58303X	**58403X**	.50	1.75	1/2-13	1.0	.25	.31	1.0	1.9	1.50	1/2

*No thread relief in 1/4-20 thread size
Initial End Forces = +/-50% Final End Forces = +/-25%

Metric

Steel Part No.	Stainless Steel Part No.	End Force (lbs) Initial	End Force (lbs) Final	Thread A mm (in.)	B mm (in.)	C mm (in.)	D mm (in.)	E mm (in.)	F mm (in.)	G mm (in.)	Hex H mm (in.)
68301X*	**68401X***	.11	.34	M6 x 1.0	13 (.50)	3 (.118)	3 (.117)	12 (.48)	25 (.98)	19	6 (.236)
68302X	**68402X**	.22	2.02	M10 x 1.5	20 (.79)	5 (.196)	6 (.236)	19 (.75)	38 (1.5)	30	10 (.39)
68303X	**68403X**	.56	1.80	M12 x 1.75	25 (.98)	6 (.236)	8 (.314)	25 (.98)	47 (1.85)	37	12(.472)

*No thread relief in M6 thread size

ANGIC GLOBAL SOLUTIONS
Get quote
832-1274 • w
Angic Global Solutions 1-888-872-0690
https://www.AngicGlobal.com Sales@AngicGlobal.com

Knurled Knob Hand Retractable Spring Plungers
Steel & Stainless Steel: Non-Locking

- Material:
  - Body: Steel or Stainless Steel
  - Plunger: Steel or Stainless Steel
- Unified ANSI and metric threads
- Hand retractable plunger can be easily engaged and withdrawn
- Chamfered plunger for easy alignment
- Built-in drive wrench for rapid installation and alignment

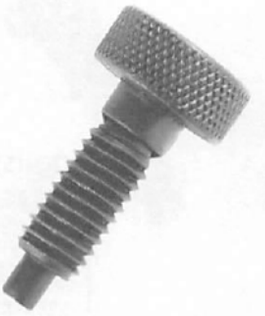

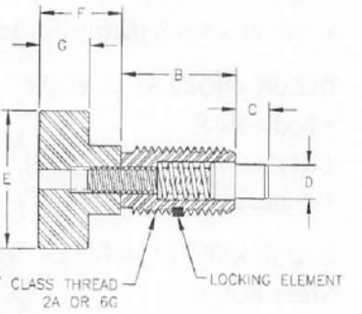

Steel* Black Part No.	Steel** Yellow Part No.	Stainless Steel Part No.	End Force (lbs) Initial	End Force (lbs) Final	Thread A	B	C	+.001 -.001 D	E	F	G	Weight (lbs/100pcs)
–	54654X	54505X	.50	3.0	10-32	.400	.094	.104***	0.38	.250	.190	2
54601X	54650X	54501X	1.00	4.00	1/4-20	.500	.125	.123	0.50	.313	.190	2
54602X	54651X	54502X	1.00	6.00	5/16-18	.625	.188	.154	0.63	.375	.250	4
54603X	54652X	54503X	1.00	8.00	3/8-16	.750	.218	.185	0.75	.500	.310	6
54604X	54653X	54504X	1.00	10.00	1/2-13	.875	.250	.248	1.00	.625	.380	8

*Black Oxide Finish **Zinc Plated Yellow Chromate Finish ***Radiused Nose

METRIC

Steel** Part No.	Stainless Steel Part No.	End Force (lbs) Initial	End Force (lbs) Final	Thread A	B mm (in.)	C mm (in.)	D* mm (in.)	E mm (in.)	F mm (in.)	G mm (in.)
64601X	64501X	0.5	3.0	M5 x 0.8	10 (.394)	2 (.078)	2.5 (.0984)	9(.355)	6 (.236)	4 (.157)
64602X	64502X	1.0	4.0	M6 x 1.0	13 (.512)	3 (.118)	3 (.118)	13 (.512)	8 (.315)	5 (.197)
64603X	64503X	1.0	8.0	M10 x 1.5	19 (.748)	6 (.236)	5 (.1968)	19 (.748)	13 (.512)	8 (.315)
64604X	64504X	1.0	10.0	M12 x 1.75	23 (.905)	6 (.236)	6 (.236)	25 (.984)	16 (.630)	10 (.315)

*Tolerance: +.000; -.0254 (+.000; -.001) **Zinc Plated Yellow Chromate Finish

NYLON THREAD LOCKING ELEMENT IS OFFERED AS AN OPTION ON THESE PARTS.
To order with a locking element, simply remove the "X" at the end of the part number.

Knurled Knob Hand Retractable Spring Plungers
Steel & Stainless Steel: Locking

- Material:
  - Body: Steel or Stainless Steel
  - Plunger: Steel or Stainless Steel
- Unified ANSI and metric threads
- Hand retractable plunger can be easily engaged and withdrawn
- Chamfered plunger for easy alignment
- Built-in drive wrench for rapid installation and alignment
- Plunger can be completely withdrawn into the body and locked into a retracted position



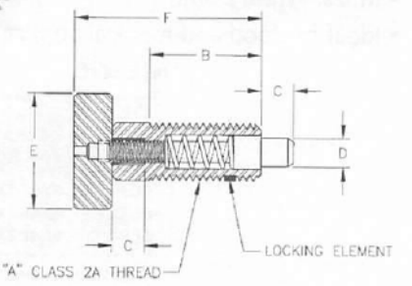

Steel Part No.*	Stainless Steel Part No.	End Force (lbs) Initial	End Force (lbs) Final	Thread A	B	C	+.001 -.001 D	E	F	Weight (lbs/100pcs)
54610X	54510X	.50	2.0	1/4-20	.400	.125	.123	.50	.805	2
54611X	54511X	.50	3.0	3/8-16	.750	.22	.185	.75	1.26	6
54612X	54512X	.50	4.0	1/2-13	.650	.25	.248	1.0	1.38	8

*Zinc Plated Yellow Chromate Finish

Get quote
Angic Global Solutions 1-888-872-0690
https://www.AngicGlobal.com Sales@AngicGlobal.com

Lever Type Plunger: Locking

- Plunger can be completely withdrawn into the body and locked into a retracted position
- Chamfered plunger for easy alignment
- Built in drive wrench for rapid installation and alignment

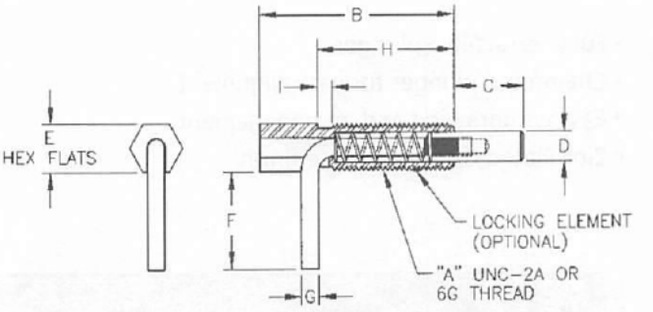

Steel* Part No.	Stainless Steel Part No.	End Force (lbs) Initial	Final	Thread A	B	C	D	Hex E	F	Dia G	H	I	Weight (lbs/100pcs)
54305X	**54201X**	0.50	2.50	1/4-20	1.25	0.38	.16	.25	0.50	.09	0.80	*	2
54306X	**54202X**	0.75	3.75	3/8-16	2.00	0.56	.23	.38	0.75	.14	1.31	.13	5
54307X	**54203X**	1.00	5.00	1/2--13	2.11	0.75	.31	.50	0.93	.19	1.25	.15	10
54308X	**54204X**	1.00	5.00	5/8-11	3.05	1.00	.38	.62	1.00	.19	2.00	.18	15

*No thread relief in 1/4-20 thread size **Zinc Plated Clear Chromate Finish

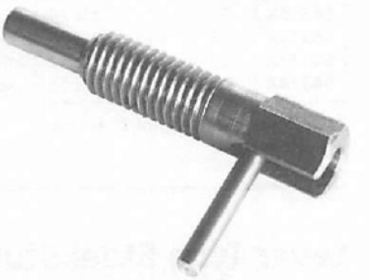

METRIC

Steel** Part No.	Stainless Steel Part No.	End Force (lbs) Initial	Final	Thread A	B mm (in.)	C mm (in.)	D* mm (in.)	E mm (in.)	F mm (in.)	G mm (in.)	H mm (in.)	I mm (in.)
64301X	**64201X**	.50	2.5	M6 x 1.0	32 (1.26)	10 (.39)	4 (.157)	6 (.236)	12.7 (.50)	2.3 (.09)	20 (.788)	*
64302X	**64202X**	.75	3.75	M10 x 1.5	51 (2)	14 (.55)	6 (.236)	10 (.39)	19 (.75)	3.5 (.14)	33 (1.3)	3.3 (1.3)
64303X	**64203X**	1.0	5.0	M12 x 1.75	54 (2.1)	19 (.75)	7 (.275)	12 (.47)	25.4 (1.0)	4.8 (.19)	32 (1.26)	3.8 (.15)

*No thread relief in M6 thread size **Zinc Plated Clear Chromate Finish

NYLON THREAD LOCKING ELEMENT IS OFFERED AS AN OPTION ON THESE PARTS.
To order with a locking element, simply remove the "X" at the end of the part number.

Steel Hand Retractable Spring Plunger: Locking

- Fully retractable plunger
- Chamfered plunger for easy alignment
- Easy withdrawing and re-engagement

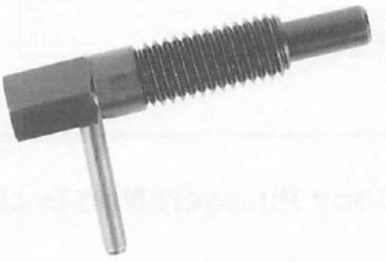

Steel* Part No.	End Force (lbs) Initial	Final	A	B	Thread C	D	Hex E	Dia F	+.000 -.001 G	H
54301X	.50	2.50	1.25	.50	1/4-20	.38	1/4	.101	.155	.50
54302X	.75	3.75	2.00	1.00	3/8-16	.56	3/8	.134	.234	.74
54303X	1.0	5.0	2.11	1.11	1/2-13	.75	1/2	.188	.313	1.00

*Black Oxide Finish

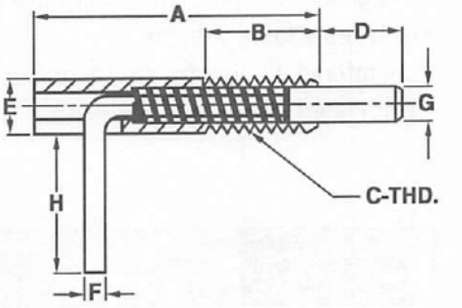

Get quote

Angic Global Solutions 1-888-872-0690
https://www.AngicGlobal.com Sales@AngicGlobal.com

SPRING LOADED DEVICES

Lever Type Steel Plunger: Non-Locking

- Fully retractable plunger
- Chamfered plunger for easy alignment
- Easy withdrawing and re-engagement
- Zinc Plated Clear Chromate finish

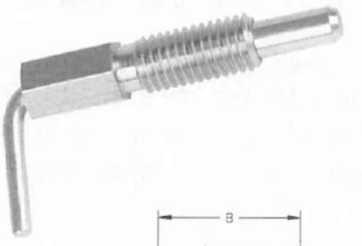

Part No.	End Force (lbs) Initial	Final	Thread A	B	C	D	Hex E	F	G	H	I
54310X	.50	2.50	1/4-20	1.25	.38	.16	.25	.50	.09	.80	*
54311X	.75	3.75	3/8-16	2.00	.56	.25	.38	.75	.14	1.31	.13
54312X	1.0	5.0	1/2-13	2.00	.75	.31	.50	1.0	.19	1.25	.15
54313X	1.0	5.0	5/8-11	3.05	1.0	.38	.62	1.0	.19	2.0	.18

*No thread relief in 1/4-20 thread size

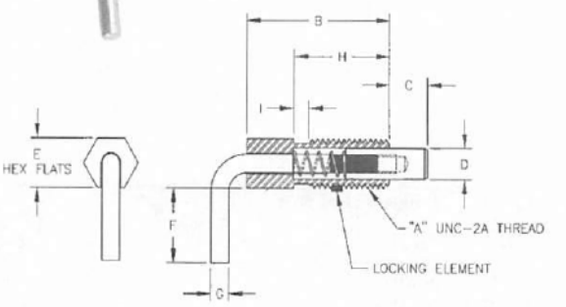

NYLON THREAD LOCKING ELEMENT IS OFFERED AS AN OPTION ON THESE PARTS.
To order with a locking element, simply remove the "X" at the end of the part number.

Lever Type Steel Stubby Plunger: Locking

- Designed for applications where space is limited
- Fully retractable plunger
- Chamfered plunger for easy alignment
- Zinc Plated Clear Chromate finish



Part No.	End Force (lbs) Initial	Final	Thread A	B	C	D	Hex E	F	G	H	I
54350X	.12	.50	1/4-20	.75	.20	.16	.25	.40	.09	.50	*
54351X	.25	1.25	3/8-16	1.13	.30	.25	.38	.56	.14	.75	.13
54352X	.50	2.0	1/2-13	1.50	.40	.31	.50	.75	.19	1.0	.15
54353X	.75	2.5	5/8-11	1.88	.50	.38	.62	.88	.19	1.25	.18

*No thread relief in 1/4-20 thread size

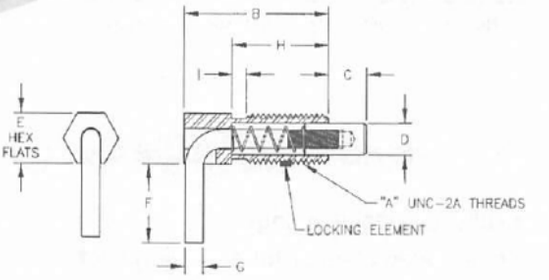

Lever Type Steel Stubby Plunger: Non-Locking

- Designed for applications where space is limited
- Fully retractable plunger
- Chamfered plunger for easy alignment
- Zinc Plated Clear Chromate finish

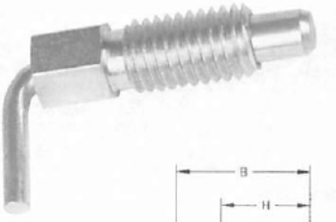

Part No.	End Force (lbs) Initial	Final	Thread A	B	C	D	Hex E	F	G	H	I
54360X	.12	.50	1/4-20	.75	.20	.16	.25	.40	.09	.50	*
54361X	.25	1.25	3/8-16	1.13	.30	.25	.38	.56	.14	.75	.13
54362X	.50	2.0	1/2-13	1.50	.40	.31	.50	.75	.19	1.0	.15
54363X	.75	2.5	5/8-11	1.88	.50	.38	.62	.88	.19	1.25	.18

*No thread relief in 1/4-20 thread size

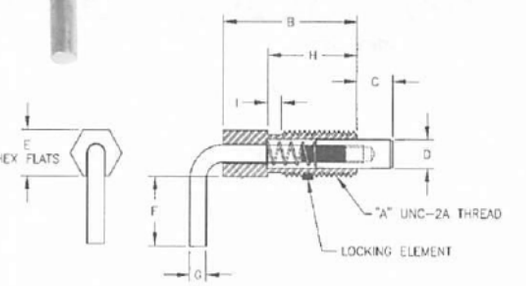

Get quote
Angic Global Solutions 1-888-872-0690
https://www.AngicGlobal.com Sales@AngicGlobal.com

Weldable Plungers

- Material:
  - Steel: 12L14
  - Stainless Steel: 304
- Ideal for latching applications
- Plungers are designed to be disassembled during welding process
- Hex shape provides ideal bead location

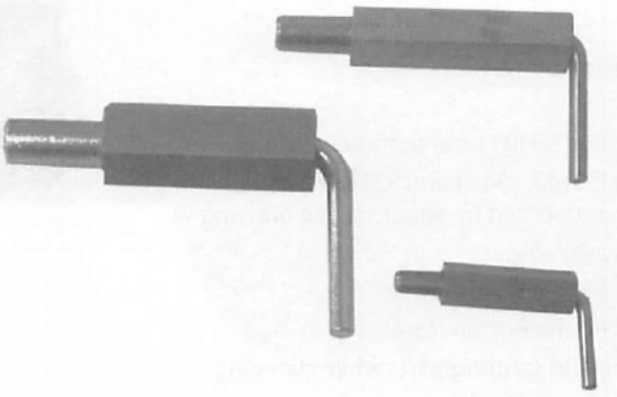

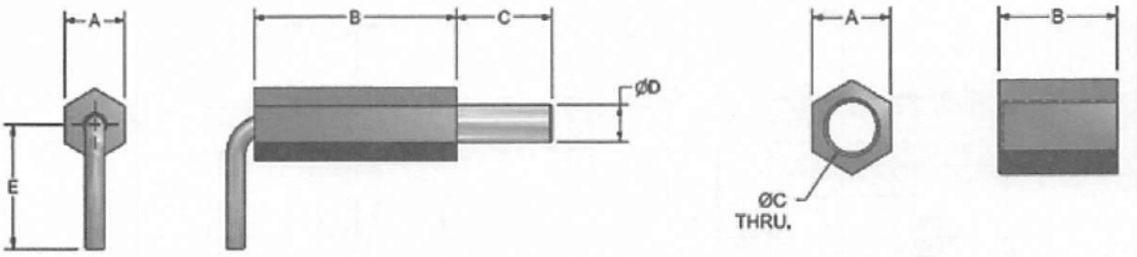

Hand Retreactable Weldable Plungers

Steel Part No.	Stainless Steel Part No.	A	B	C	D	E
54101	**54151**	1/4	.875	.38	.155	.63
54102	**54152**	3/8	1.47	.56	.234	.91
54103	**54153**	1/2	1.42	.75	.313	1.25
54104	**54154**	5/8	2.11	1.00	.375	1.25

Weldable Latch

Steel Part No.	Stainless Steel Part No.	A	B	+.002 -.000 C
54121	**54171**	1/4	3/8	.159
54122	**54172**	3/8	9/16	.237
54123	**54173**	1/2	3/4	.315
54124	**54174**	5/8	1	.377

Get quote
332-1274 • ww
Angic Global Solutions 1-888-872-0690
https://www.AngicGlobal.com Sales@AngicGlobal.com

Spring Stops

- Material:
  - Body: Aluminum
  - Nose: Steel
- Part Nos. 53100 and 53103 have triangular bodies
- Part Nos. 53101, 53102, 53104 and 53105 have squared bodies as denoted by phantom line drawing
- Two nose styles available:
  - 53100-53102: Square Nose
  - 53103-53105: Round Button Nose
- Ideal for holding and securing parts while clamping



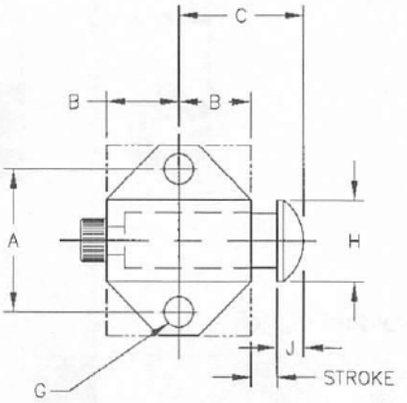

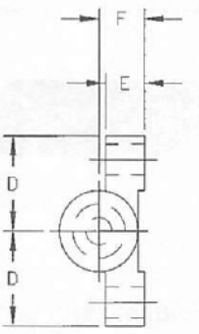

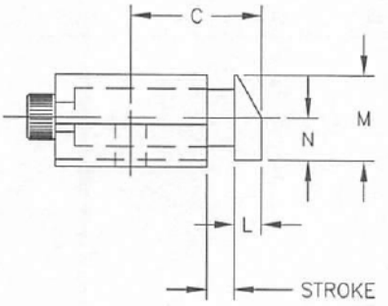

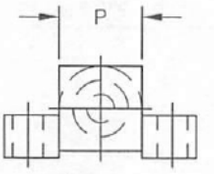

Part No.	End Force (lbs) Initial	Final	Stroke	A	B	C	D	E	F	G	H	J	L	M	N	P	Nose Style
53100	5	15	1/8	21/32	11/32	19/32	7/16	3/16	7/32	0.128	–	–	1/8	3/8	3/16	3/8	Square
53101	2	26	3/16	1-1/8	1/2	15/16	3/4	1/4	5/16	0.193	–	–	1/4	5/8	5/16	5/8	Square
53102	16	48	1/4	1-1/2	11/16	1-1/4	1	5/16	17/32	0.257	–	–	5/16	3/4	3/8	3/4	Square
53103	5	15	1/8	21/32	11/32	19/32	7/16	3/16	7/32	0.128	3/8	1/8	–	–	–	–	Round Button
53104	2	26	3/16	1-1/8	1/2	7/8	3/4	1/4	5/16	0.193	9/16	3/16	–	–	–	–	Round Button
53105	16	48	1/4	1-1/2	11/16	1-11/64	1	1/8	17/32	0.257	13/16	1/4	–	–	–	–	Round Button

Get quote
Angic Global Solutions 1-888-872-0690
https://www.AngicGlobal.com Sales@AngicGlobal.com

Installation Information for TE-CO Spring Loaded Devices

Most TE-CO Spring & Ball Plungers can be installed using a screwdriver, hex key wrench, or spring/ball plunger wrench (see page 100). Also, many Hand Retractable Spring Plungers can be installed without using any tools by simply using its knob to engage the threads. Because spring loaded devices have hollow bodies, the maximum installation torques they can withstand are significantly less than bolts or screws. The table below should be used as a guideline for installing spring loaded devices.

Unified Thread Size	Metric Thread Size	Max Installation Torque (inch pounds)
No. 4	M2.5 x 0.45	.60
No. 5	M3 x 0.5	1.25
No. 6	M3.5 x 0.6-6g	1.65
No. 8	M4 x 0.7-6g	2.15
No. 10	M5 x 0.8-6g	3.15
1/4	M6 x 1-6g	6.0
5/16	M8 x 1.25	11.0
3/8	M10 x 1.5	16.0
7/16	M11 x 1.5	22.0
1/2	M12 x 1.75	28.0
9/10	M14 x 2.0	36.0
5/8	M16 x 2.0	55.0
3/4	M20 x 2.5	70.0
7/8	M22 x 2.5	95.0
1	M24 x 3.0	130.0
1-1/8	M30 x 3.5	160.0
1-1/4	M33 x 3.5	190.0

Most TE-CO Spring Loaded Devices can be ordered with or without a nylon thread locking element (see each product group for details). The nylon-locking element forces the threads on the opposite side of a spring loaded device to compress against the mating threads of a tapped hole, providing the thread locking property. The nylon-locking element can cause installation problems when installing into softer metals or aluminum. This can be prevented by either using a larger tap drill when tapping, by ordering a spring plunger without a locking element, or by requesting a quote for a special plunger that will fit your needs.

When installing spring loaded devices with a nylon thread locking element pellet (thread sizes 5/16" and larger or M8 and larger), TE-CO recommends that the tapped installation hole be countersunk 90 degrees by 1/32 larger than major thread diameter to prevent damage to the locking element.

For more detailed information you may contact any of our knowledgeable TE-CO Customer Service Representatives at 800-543-4071.

Inch Tap Drill Sizes Table for Spring Plungers

Tap	Tap Drill	Decimal Equiv. of Tap Drill	Probable Hole Size	Percent Of Thread %
4-48	42	0.0935	0.0955	61
	3/32	0.0938	0.0958	60
	41	0.0960	0.0980	52
5-40	40	0.098	0.1003	76
	39	0.0995	0.1018	71
	38	0.1015	0.1038	65
	37	0.1040	0.1063	58
	37	0.1040	0.1063	78
6-32	36	0.1065	0.1091	71
	7/64	0.1094	0.1120	64
	35	0.1100	0.1126	63
	34	0.1110	0.1136	60
	33	0.1130	0.1156	55
6-40	34	0.1110	0.1136	75
	33	0.1130	0.1156	69
	32	0.1160	0.1186	60
8-32	29	0.1360	0.1389	62
	28	0.1405	0.1434	51
8-36	29	0.1360	0.1389	70
	28	0.1405	0.1434	57
	9/64	0.1406	0.1435	57
10-32	5/32	0.1563	0.1595	75
	22	0.1570	0.1602	73
	21	0.1590	0.1622	68
	20	0.1610	0.1642	64
	19	0.1660	0.1692	51
1/4-20	9	0.1960	0.1998	77
	8	0.1990	0.2028	73
	7	0.2010	0.2048	70
	13/64	0.2031	0.2069	66
	6	0.2040	0.2078	65
	5	0.2055	0.2093	63
	4	0.2090	0.2128	57
1/4-28	3	0.2130	0.2168	72
	7/32	0.2188	0.2226	59
	2	0.2210	0.2248	55
5/16-18	F	0.257	0.2608	72
	G	0.261	0.2651	66
	17/64	0.2656	0.2697	59
	H	0.2660	0.2701	59
3/8-16	5/16	0.3125	0.3169	72
	O	0.3160	0.3204	68
	P	0.3230	0.3274	59
1/2-13	27/64	0.4219	0.4266	73
	7/16	0.4375	0.4422	58
5/8-11	17/32	0.5313	0.5362	75
	36/64	0.5469	0.5518	62
3/4-10	41/64	0.6406	0.6456	80
	21/32	0.6563	0.6613	68
1-8	55/64	0.8594	0.8653	83
	7/8	0.8750	0.8809	73
	57/64	0.8906	0.8965	64
	29/32	0.9063	0.9122	54

ANGIC GLOBAL SOLUTIONS

Get quote

332-1274 • w

Angic Global Solutions 1-888-872-0690
https://www.AngicGlobal.com Sales@AngicGlobal.com

NOTES

Get quote
Angic Global Solutions 1-888-872-0690
https://www.AngicGlobal.com Sales@AngicGlobal.com

TOGGLE CLAMPS

Vertical Handle..... 108-110

Horizontal Handle..... 111-112

Straight Line Action..... 113-115

Pull Action 116-118

Accessories 118

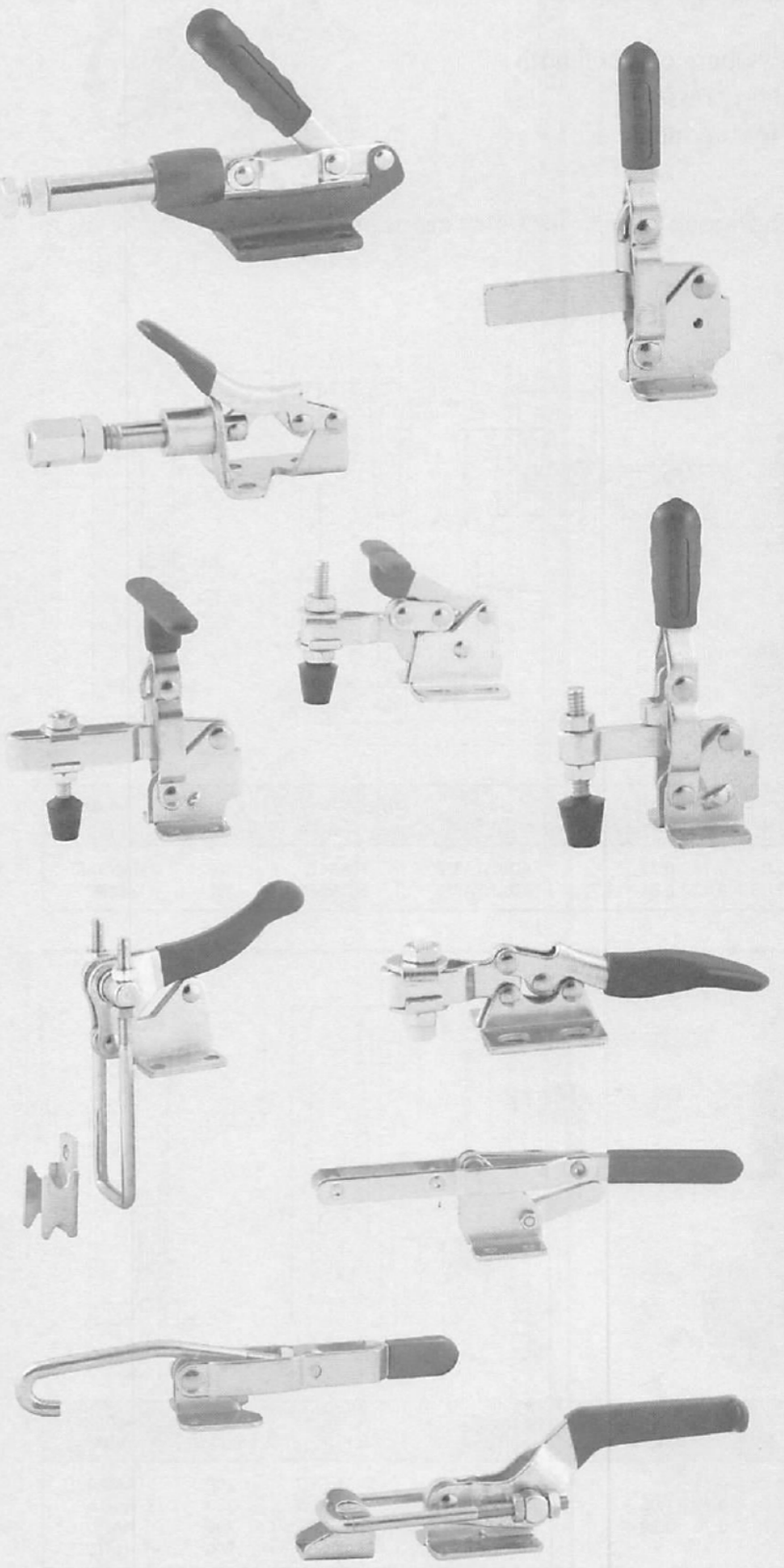

General Information

HOLDING CAPACITY

The **holding capacity** listed for each clamp refers to the maximum external force that the clamp can safely resist in its locked position without incurring any permanent deformation. For hold down clamps, holding capacity is measured with the spindle as close as possible to the handle, and will be less at the end of the clamping arm.

CLAMPING FORCE

Clamping force, the amount of force actually applied to the workpiece by closing and locking the clamp, is generally less than the stated holding capacity. This allows the clamp to have ample capacity to resist external machining forces. Actual clamping force depends on many factors including: spindle position, proper spindle height adjustment, type of spindle used, workpiece material, and the clamp's mechanical advantage. In most cases roughly 1/2 of the stated holding capacity can be applied by hand with medium effort.

ANGIC GLOBAL SOLUTIONS

Get quote

Angic Global Solutions 1-888-872-0690
https://www.AngicGlobal.com Sales@AngicGlobal.com

Vertical Handle Toggle Clamps

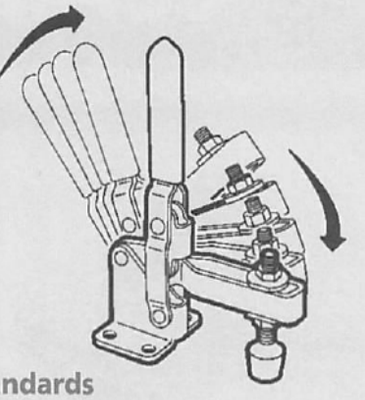

- One of the most popular styles of Toggle Clamps
- Solid bar allows fixed location of spindle by welding bolt retainer at desired position
- U-Bar allows spindle to be located anywhere on bar length
- Flanged bases provide optimum holding pressure
- T-Handles provide greater clearance for machines
- All clamps include spindle assembly

All TE-CO Toggle Clamps are interchangeable with industry standards

Vertical Handle Toggle Clamps
Part Numbers 34001 and 34003

Bar Opens: 100°
Handle Opens: 56°
Spindle Type: Bonded Neoprene
Spindle Size: #10-24 X 1.38



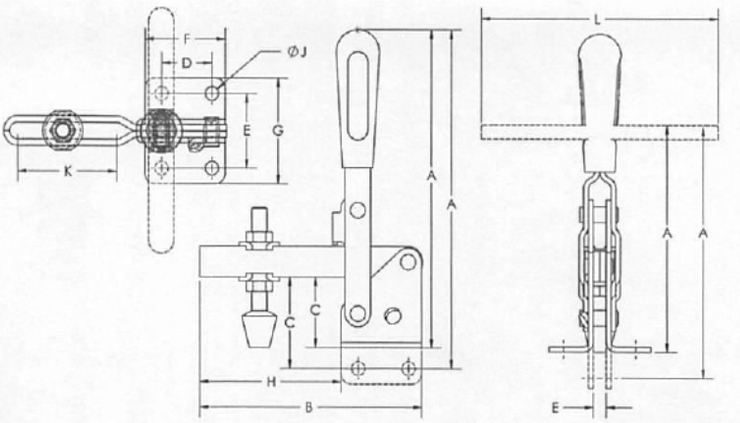

Part No.	A	B	C	D	E	F	G	H	J	K	L	Bar Type	Base Type	Holding Cap. Lbs.	Handle Type
34001	3.38	2.07	0.73	0.63	0.95	1.00	1.32	1.06	0.17	0.77	-	ADJUSTABLE	FLANGED	100	STANDARD
34003	2.41	2.07	0.68	0.63	0.94	1.00	1.32	1.06	0.17	0.81	1.77	ADJUSTABLE	FLANGED	100	T-HANDLE

Vertical Handle Toggle Clamps
Part Numbers 34010, 34006, 34008, 34012

Bar Opens: 100°
Handle Opens: 60°
Spindle Type:
Bonded Neoprene
Spindle Size: 1/4-20 X 1.75

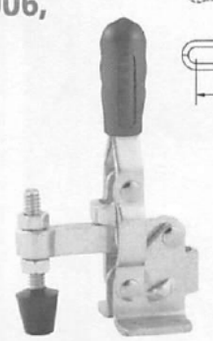

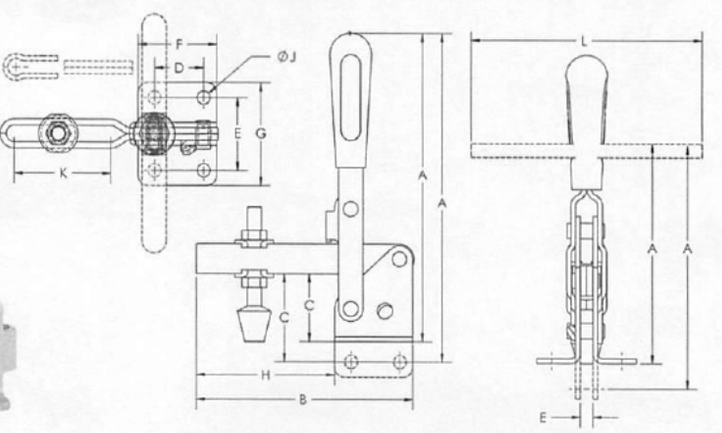

Part No.	A	B	C	D	E	F	G	H	J	K	L	Bar Type	Base Type	Holding Cap. Lbs.	Handle Type
34010	4.01	2.50	0.98	0.51	1.00	0.98	1.50	1.28	0.21	-	-	SOLID	FLANGED	200	STANDARD
34006	4.01	2.68	0.95	0.52	1.03	0.98	1.50	1.68	0.20	1.08	-	ADJUSTABLE	FLANGED	200	STANDARD
34008	3.12	2.68	0.98	0.51	1.03	0.98	1.53	1.70	0.20	0.98		ADJUSTABLE	FLANGED	200	T-HANDLE
34012	3.03	2.50	0.97	0.56	0.99	0.99	1.48	1.26	0.21	-	2.60	SOLID	FLANGED	200	T-HANDLE

Get quote
Angic Global Solutions 1-888-872-0690
https://www.AngicGlobal.com Sales@AngicGlobal.com

Vertical Handle Toggle Clamps
Part Numbers 34023, 34020, 34022, 34025, 34009

Bar Opens: 100°
Handle Opens: 60°
Spindle Type: Bonded Neoprene
Spindle Size: 5/16-18 X 2.50

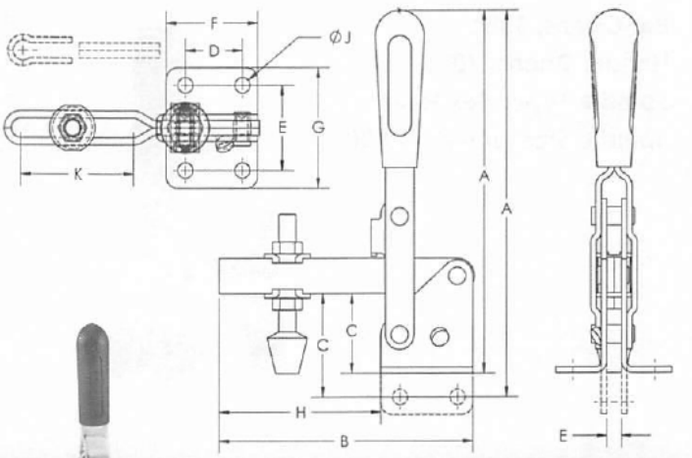

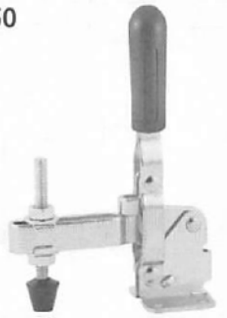

PART #34023



PART #34022

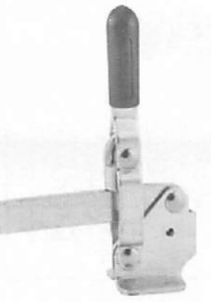

PART #34025

Part No.	A	B	C	D	E	F	G	H	J	K	L	Bar Type	Base Type	Holding Cap. Lbs.	Handle Type
34023	5.60	5.43	1.25	0.78	1.25	1.38	1.77	3.75	0.27	2.79	-	LONG ADJUSTABLE	FLANGED	500	STANDARD
34020	5.88	4.59	1.23	0.75	1.25	1.38	1.82	2.85	0.27	2.05	-	ADJUSTABLE	FLANGED	200	STANDARD
34022	4.10	4.60	1.23	0.75	1.25	1.38	1.77	2.86	0.27	2.10	3.86	ADJUSTABLE	FLANGED	375	T-HANDLE
34025	5.90	3.75	1.26	0.74	1.25	1.37	1.80	2.24	0.27	-	-	SOLID	FLANGED	375	STANDARD
34009	5.58	4.78	1.26	0.75	1.25	1.38	1.76	3.40	0.27	-	-	LONG SOLID	FLANGED	500	STANDARD

Vertical Handle Toggle Clamps
Part Numbers 34030, 34015, 34035

Bar Opens: 105°
Handle Opens: 58°
Spindle Type: Bonded Neoprene
Spindle Size: 3/8-16 X 3.50

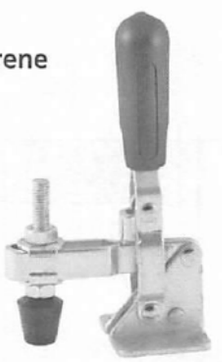

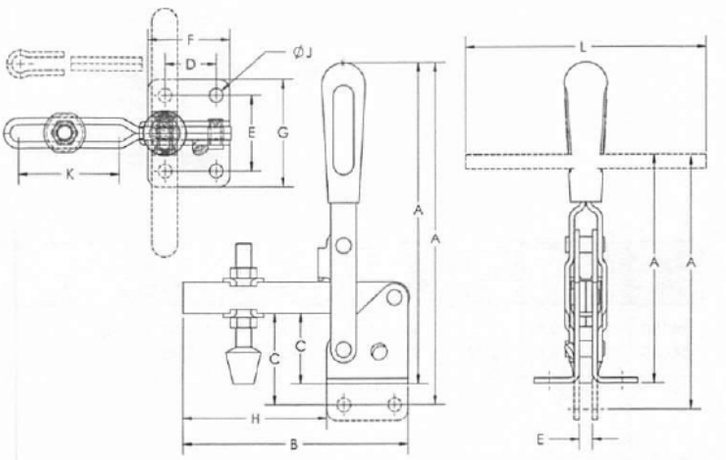

Part No.	A	B	C	D	E	F	G	H	J	K	L	Bar Type	Base Type	Holding Cap. Lbs.	Handle Type
34030	7.96	5.65	1.66	1.25	1.80	1.94	2.55	3.56	0.31	2.31	-	ADJUSTABLE	FLANGED	600	STANDARD
34015	5.60	5.50	1.62	1.25	1.77	1.94	2.50	3.56	0.31	2.40	5.13	ADJUSTABLE	FLANGED	600	T-HANDLE
34035	7.89	5.59	1.26	1.25	1.81	1.94	2.56	3.53	0.31	-	-	SOLID	FLANGED	750	STANDARD

ANGIC GLOBAL SOLUTIONS
Get quote
32-1274 • ww
Angic Global Solutions 1-888-872-0690
https://www.AngicGlobal.com Sales@AngicGlobal.com

Vertical Handle Toggle Clamps
Part Numbers 34040, 34041

Bar Opens: 135°
Handle Opens: 70°
Spindle Type: Hex Head
Spindle Size: 1/2-13 X 3.00

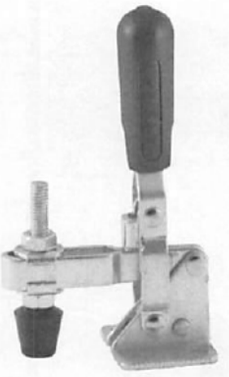

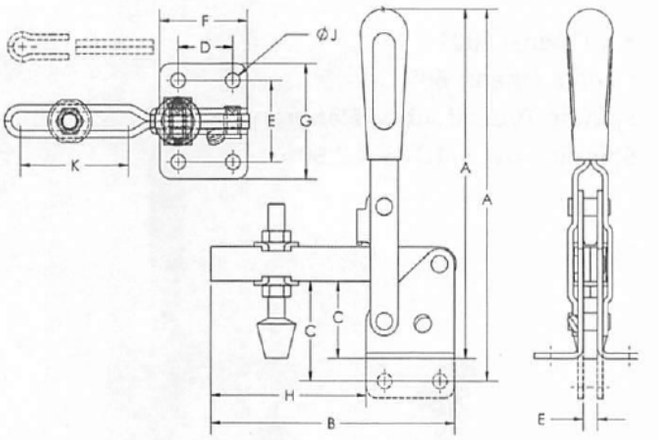

Part No.	A	B	C	D	E	F	G	H	J	K	L	Bar Type	Base Type	Holding Cap. Lbs.	Handle Type
34040	8.81	6.89	1.95	1.25	1.77	2.00	2.56	4.87	0.35	2.98	-	ADJUSTABLE	FLANGED	1000	STANDARD
34041	8.81	7.12	2.00	1.26	1.78	2.01	2.56	4.95	0.35	-	-	SOLID	FLANGED	1000	STANDARD

Vertical Handle Toggle Clamps
Part Numbers 34050, 34029

Bar Opens: 140°
Handle Opens: 60°
Spindle Type: Hex Head
Spindle Size: 1/2-13 X 4.50

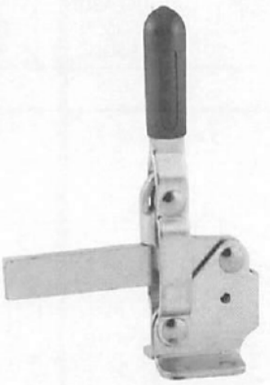

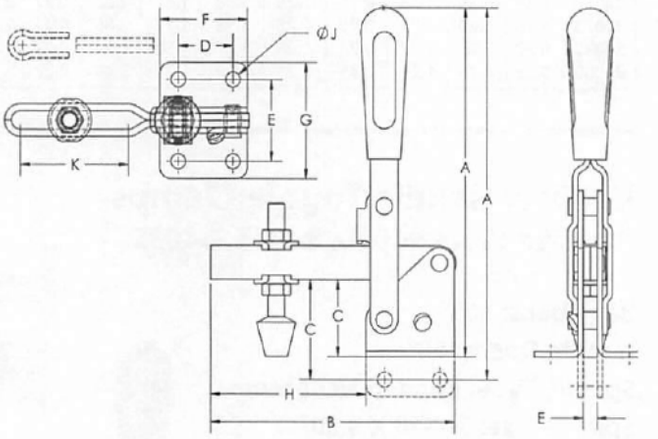

Part No.	A	B	C	D	E	F	G	H	J	K	L	Bar Type	Base Type	Holding Cap. Lbs.	Handle Type
34050	11.87	9.00	3.08	2.00	2.75	2.99	3.75	5.99	0.48	4.33	-	ADJUSTABLE	FLANGED	1200	STANDARD
34029	11.83	8.97	3.22	2.00	2.75	2.99	3.75	5.98	0.48	-	-	SOLID	FLANGED	1200	STANDARD

Get quote
Angic Global Solutions 1-888-872-0690
https://www.AngicGlobal.com Sales@AngicGlobal.com

Horizontal Handle Toggle Clamps

- U-Bar allows the spindle to be located anywhere on bar length
- All clamps supplied with spindle assembly
- Handles stay clear of the workpiece while machining
- Flanged bases provide optimum holding pressure

All TE-CO Toggle Clamps are interchangeable with industry standards

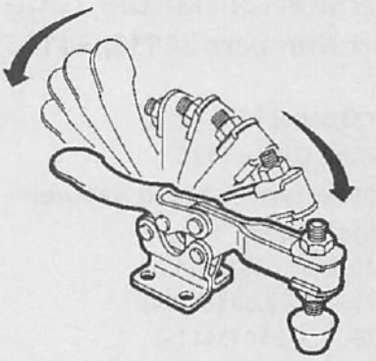

Horizontal Handle Toggle Clamps
Part Numbers 34105, 34101



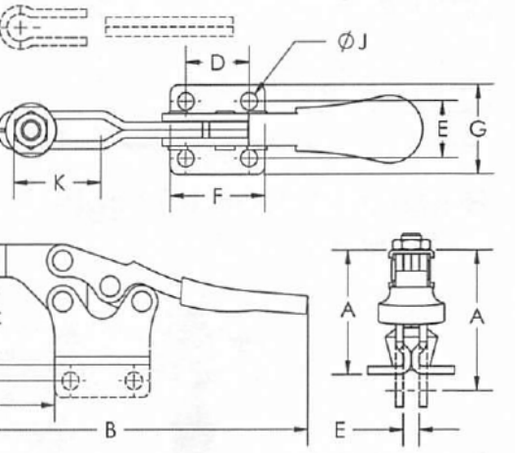

Bar Opens: 90°
Handle Opens: 80°
Spindle Type: Nylon Hex Head
Spindle Size: #8-32 X .75

Part No.	A	B	C	D	E	F	G	H	J	K	L	Bar Type	Base Type	Holding Cap. Lbs.	Handle Type
34105	0.70	3.10	0.34	0.42	0.65	0.95	0.98	0.78	0.17	0.48	-	ADJUSTABLE	FLANGED	60	STANDARD
34101	0.73	3.24	0.42	0.41	0.64	0.95	0.99	0.87	0.17	-	-	SOLID BAR	FLANGED	60	STANDARD

Horizontal Handle Toggle Clamps
Part Numbers 34107



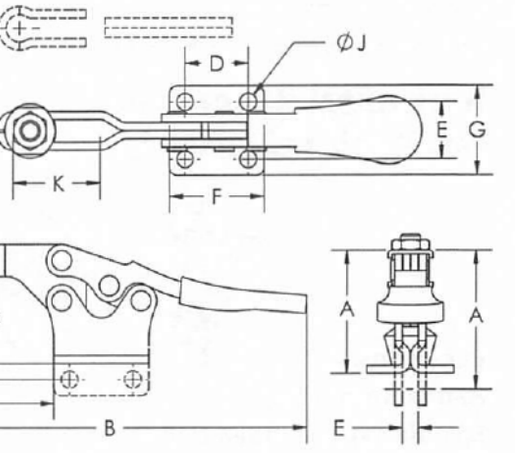

Bar Opens: 85°
Handle Opens: 60°
Spindle Type: Bonded Neoprene
Spindle Size: 1/4-20 X 2.13

Part No.	A	B	C	D	E	F	G	H	J	K	L	Bar Type	Base Type	Holding Cap. Lbs.	Handle Type
34107	1.53	5.90	1.00	0.98	0.83	1.46	1.34	2.27	0.21	-	-	SOLID BAR	FLANGED	200	STANDARD

ANGIC
Get quote
32-1274 • ww
Angic Global Solutions 1-888-872-0690
https://www.AngicGlobal.com Sales@AngicGlobal.com

Horizontal Handle Toggle Clamps
Part Numbers 34113, 34114, 34115

Bar Opens: 90°
Handle Opens: 170°
Spindle Type: Bonded Neoprene
Spindle Size:
- #10-24 X 1.38 (34113)
- 5/16-18 X 2.50 (34114)
- 3/8-16 X 3.50 (34115)

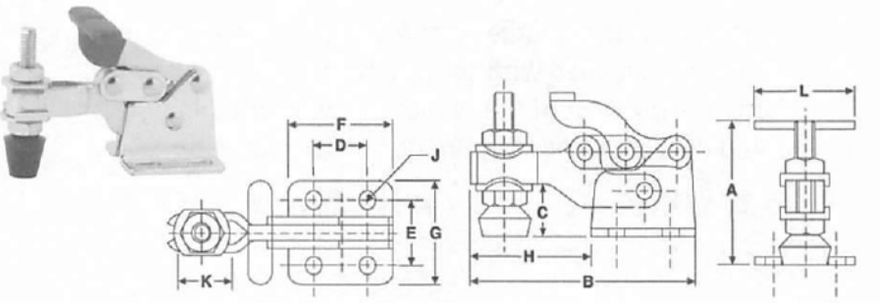

Part No.	A	B	C	D	E	F	G	H	J	K	L	Bar Type	Base Type	Holding Cap. Lbs.	Handle Type
34113	1.47	2.30	0.65	0.53	0.66	1.03	1.03	1.26	0.17	0.44	1.32	ADJUSTABLE BAR	FLANGED	150	STANDARD
34114	2.49	3.68	0.89	0.91	1.17	1.72	1.82	1.93	0.28	0.77	2.01	ADJUSTABLE BAR	FLANGED	350	STANDARD
34115	3.73	5.33	1.31	1.38	1.50	2.52	2.52	2.81	0.31	1.32	2.48	ADJUSTABLE BAR	FLANGED	750	STANDARD

Horizontal Handle Toggle Clamps
Part Numbers 34120



Bar Opens: 90°
Handle Opens: 65°
Spindle Type: Bonded Neoprene
Spindle Size: 5/16-18 X 3.00

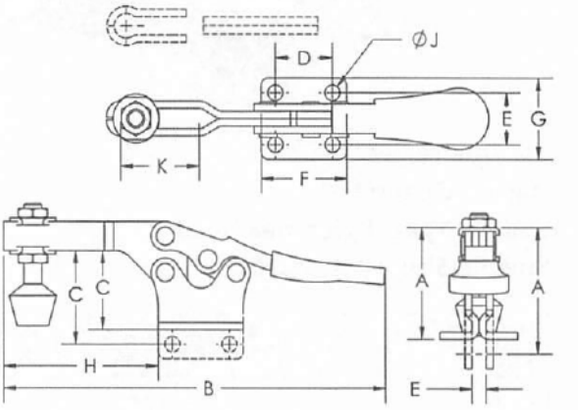

Part No.	A	B	C	D	E	F	G	H	J	K	L	Bar Type	Base Type	Holding Cap. Lbs.	Handle Type
34120	1.96	6.88	1.31	0.99	0.89	1.51	1.36	2.91	0.28	1.31	-	ADJUSTABLE BAR	FLANGED	500	STANDARD

Horizontal Handle Toggle Clamps
Part Numbers 34130



Bar Opens: 85°
Handle Opens: 50°
Spindle Type: Bonded Neoprene
Spindle Size: 3/8-16 X 3.50

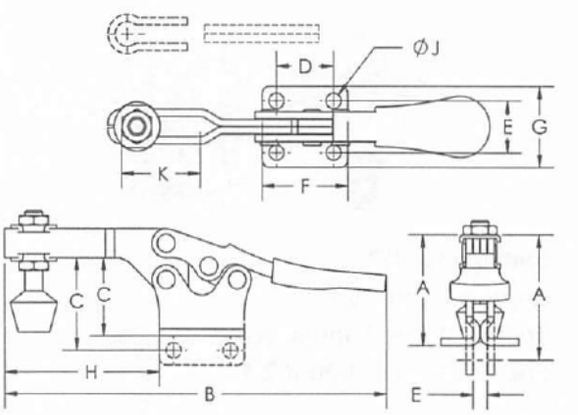

Part No.	A	B	C	D	E	F	G	H	J	K	L	Bar Type	Base Type	Holding Cap. Lbs.	Handle Type
34130	2.55	10.40	1.73	1.62	1.60	2.25	2.23	4.29	0.31	2.74	-	ADJUSTABLE BAR	FLANGED	750	STANDARD

32-1274 • ww
Get quote
Angic Global Solutions 1-888-872-0690
https://www.AngicGlobal.com Sales@AngicGlobal.com

Straight Line Action Clamps

- Clamps provide push/pull forces
- Tapped plunger allow use of a variety of spindles and attachments
- All clamps supplied with spindle assembly

All TE-CO Toggle Clamps are interchangeable with industry standards

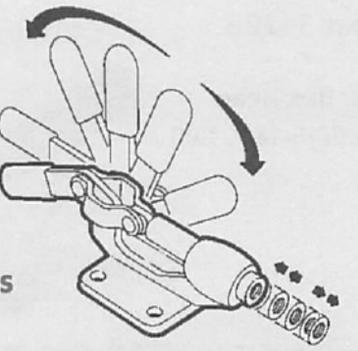

Straight Line Action Clamps
Part Numbers 34300, 34301, 34302

Spindle Type: Hex Head
Spindle Size:
- 1/4-20 X .63 (34300)
- 5/16-18 X 1.00 (34301)
- 3/8-16 X 1.25 (34302)



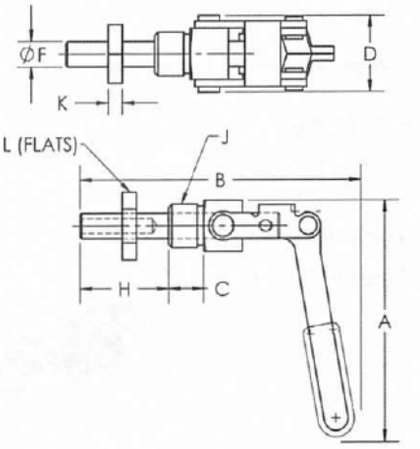

Part No.	A	B	C	D	E	F	G	H	J	K	L	Mounting Type	Handle Type	Holding Cap. Lbs.	Plunger Travel
34300	3.06	2.67	0.48	1.03	-	0.37	-	0.81	0.58	0.26	0.94	THROUGH HOLE	STANDARD	200	.75
34301	4.16	4.26	0.63	1.28	-	0.43	-	1.57	0.73	0.25	1.17	THROUGH HOLE	STANDARD	300	1.50
34302	5.43	6.73	0.88	1.86	-	0.63	-	2.80	1.05	0.35	1.59	THROUGH HOLE	STANDARD	700	2.63

Straight Line Action Clamps
Part Numbers 34305, 34303

Spindle Type: Hex Head
Spindle Size:
- #8-32 X.50DP (34305)
- 1/4-20 X .50LG (34303)

PART #34305

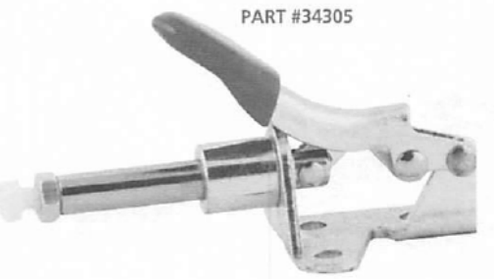



PART #34303

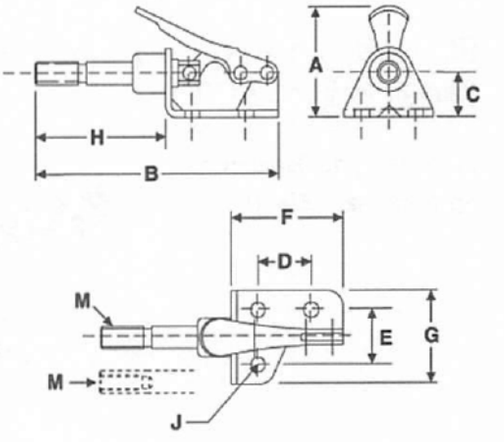

Part No.	A	B	C	D	E	F	G	H	J	M	Mounting Type	Handle Type	Holding Cap. Lbs.	Plunger Travel	Spindle Thread
34303	1.59	2.85	0.57	0.63	0.61	1.32	1.07	1.53	0.17	1/4-20	STANDARD	STANDARD	100	.63	EXTERNAL
34305	1.57	2.67	0.52	0.63	0.61	1.31	1.07	1.35	0.17	0.25	STANDARD	STANDARD	100	.63	INTERNAL

ANGIC GLOBAL SOLUTIONS
Get quote
32-1274 • ww
Angic Global Solutions 1-888-872-0690
https://www.AngicGlobal.com Sales@AngicGlobal.com

Straight Line Action Clamps
Part Number 34306

Spindle Type: Hex Head
Spindle Size: 5/16-18 X 1.00

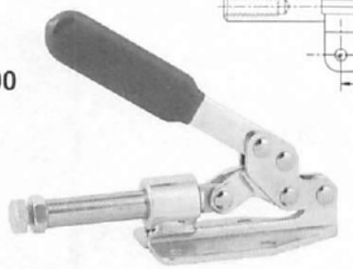

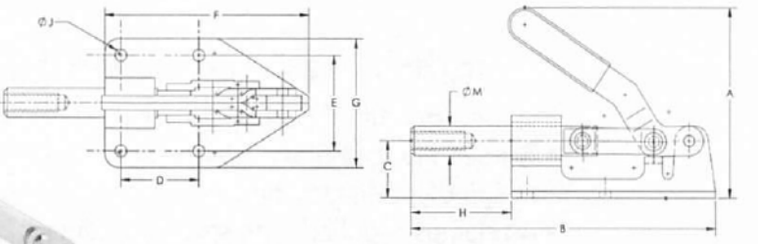

Part No.	A	B	C	D	E	F	G	H	J	M	Mounting Type	Handle Type	Holding Cap. Lbs.	Plunger Travel	Spindle Thread
34306	4.10	5.00	0.85	1.57	1.33	3.27	1.95	1.71	0.26	0.47	FLANGE	STANDARD	300	1.25	INTERNAL

Straight Line Action Clamps
Part Number 34310

Spindle Type: Hex Head
Spindle Size: 5/16-18 X 1.00



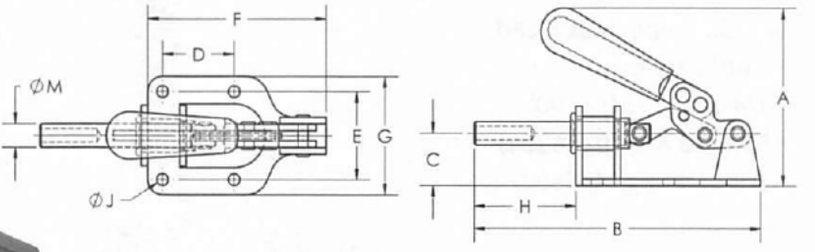

Part No.	A	B	C	D	E	F	G	H	J	M	Mounting Type	Handle Type	Holding Cap. Lbs.	Plunger Travel	Spindle Thread
34310	3.14	5.45	0.98	1.38	1.64	3.55	2.22	1.90	0.22	0.47	FLANGE	STANDARD	300	1.25	INTERNAL

Straight Line Action Clamps
Part Number 34320

Spindle Type: Hex Head
Spindle Size: 3/8-16 X 1.25

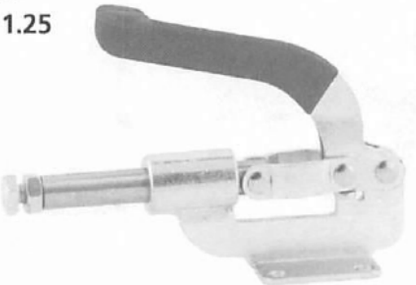

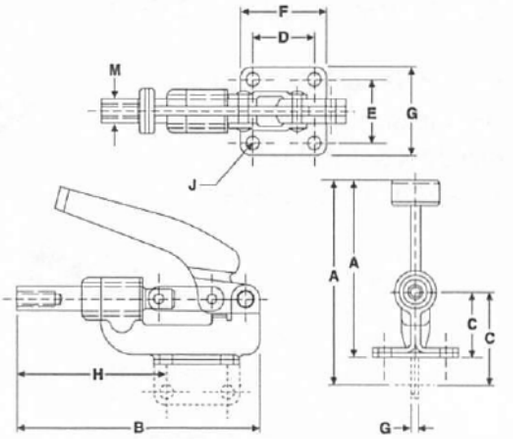

Part No.	A	B	C	D	E	F	G	H	J	M	Mounting Type	Handle Type	Holding Cap. Lbs.	Plunger Travel	Spindle Thread
34320	5.04	6.82	1.75	1.63	1.58	2.25	2.20	4.23	0.34	0.62	FLANGE	STANDARD	800	1.63	INTERNAL

2-1274 • www
Get quote
Angic Global Solutions 1-888-872-0690
https://www.AngicGlobal.com Sales@AngicGlobal.com

Straight Line Action Clamps
Part Numbers 34340, 34350, 34360, 34309, 34308

Spindle Type: Hex Head
Spindle Size:
- 5/16-18 X 1.00 (34340)
- 3/8-16 X 1.25 (34350, 34360)
- 1/2-13 X 2.00 (34309, 34308)

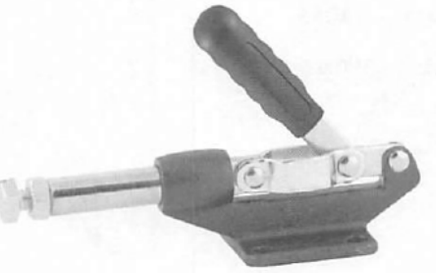

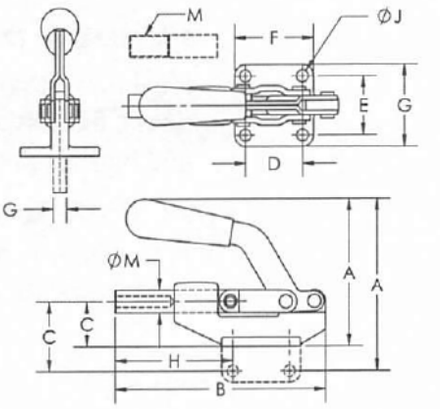

Part No.	A	B	C	D	E	F	G	H	J	M	Mounting Type	Handle Type	Holding Cap. Lbs.	Plunger Travel	Spindle Thread
34340	3.34	3.64	0.98	1.44	1.32	2.30	1.85	2.03	0.23	0.43	FLANGE	45 degrees	600	1.25	INTERNAL
34350	4.19	6.41	1.25	1.62	1.63	2.33	2.25	3.13	0.33	0.63	FLANGE	45 degrees	850	1.65	INTERNAL
34360	4.95	9.39	1.78	1.99	2.00	2.89	2.48	5.00	0.34	0.70	FLANGE	45 degrees	1500	2.36	INTERNAL
34309	4.75	6.41	1.25	1.60	1.62	2.33	2.25	3.14	0.33	0.62	FLANGE	45 degrees	850	1.25	INTERNAL
34308	6.93	9.38	1.83	2.00	2.02	2.85	2.82	5.75	0.35	0.70	FLANGE	45 degrees	1500	2.36	INTERNAL

Straight Line Action Clamps
Part Numbers 34304, 34330

Spindle Type: Hex Head
Spindle Size:
- 5/16-18 X 1.00 (34304)
- 3/8-16 X 1.25 (34330)

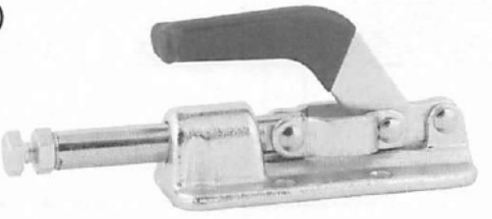

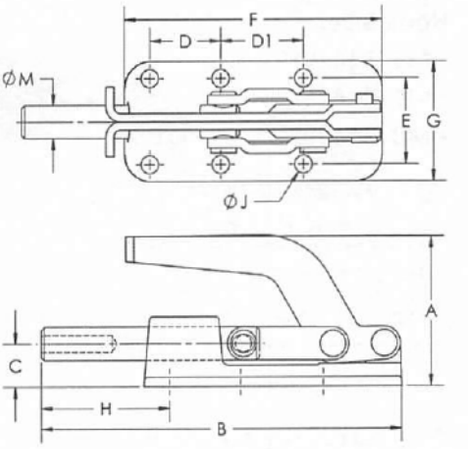

Part No.	A	B	C	D	E	F	G	H	J	M	Mounting Type	Handle Type	Holding Cap. Lbs.	Plunger Travel	Spindle Thread
34304	3.28	6.10	0.68	1.38	1.62	4.30	2.18	1.86	0.28	0.51	FLANGE	STANDARD	800	1.63	INTERNAL
34330	2.93	7.06	0.88	1.39	1.63	5.25	2.24	1.82	0.35	0.63	FLANGE	STANDARD	2500	2.00	INTERNAL

Get quote

32-1274 • ww

Angic Global Solutions 1-888-872-0690
https://www.AngicGlobal.com Sales@AngicGlobal.com

Pull Action Clamps

Ideal for latching, locking, or fastening doors, fixtures, pressure vessels, covers and hatches on storage tanks

All TE-CO Toggle Clamps are interchangeable with industry standards

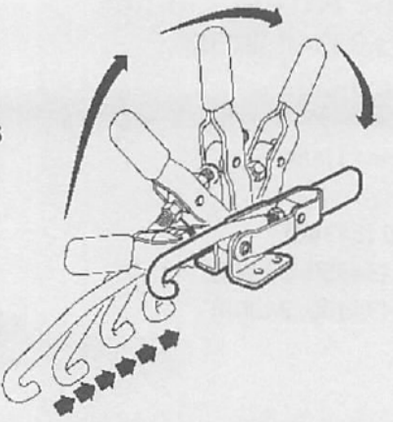

Pull Action Clamps
Part Numbers 34420, 34425, 34430

Spindle Type: U-Hook
Drawing Movement:
- 1.81" (34420)
- 1.75" (34425)
- 2.50" (34430)

Hook Size:
- M4 (34420)
- M5 (34425)
- M8 (34430)

- Flanged Base
- Standard Handle



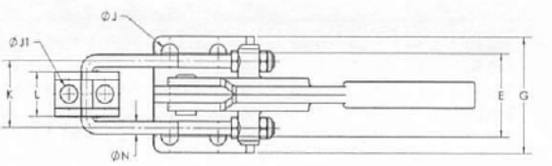

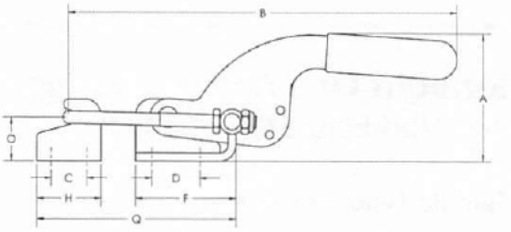

Part No.	A	B	C	D	E	F	G	H	J	K	L	N	O	Q Min	Q Max	Holding Capacity
34420	1.31	4.18	0.40	0.62	0.76	1.03	1.12	0.78	0.17	0.80	0.55	0.13	0.44	1.84	2.57	360
34425	1.91	6.56	0.48	0.78	1.25	1.52	1.75	1.01	0.28	0.79	1.00	0.17	0.50	2.53	3.69	700
34430	2.75	8.48	0.76	1.62	1.44	2.39	2.12	1.17	0.34	1.17	0.31	1.75	0.83	4.39	5.37	2000

Pull Action Clamps
Part Numbers 34409, 34411

Spindle Type: U-Hook
Drawing Movement:
- 3.50" (34409)
- 2.19" (34411)

Hook Size:
- M10 (34409)
- M12 (34411)

- Flanged Base
- Standard Handle

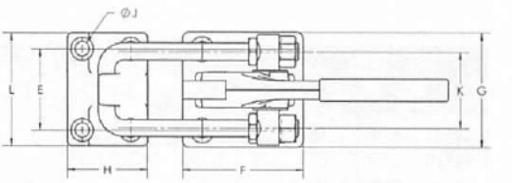

PART #34409



PART #34411

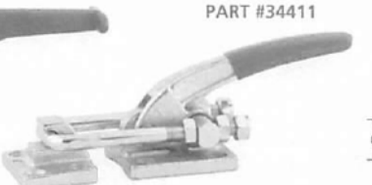

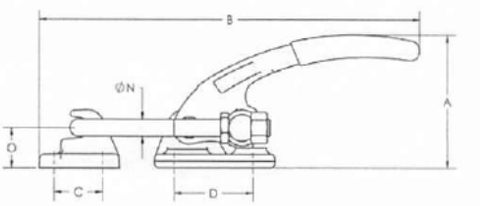

Part No.	A	B	C	D	E	F	G	H	J	K	L	N	O	Q Min	Q Max	Holding Capacity
34409	3.96	11.39	1.37	2.24	2.28	3.43	3.21	2.32	0.41	1.71	3.14	0.39	1.17	6.22	7.21	4000
34411	3.63	10.18	1.37	2.24	2.26	3.43	3.17	2.32	0.41	2.06	3.14	0.46	1.08	6.13	7.25	7500

Get quote
Angic Global Solutions 1-888-872-0690
https://www.AngicGlobal.com Sales@AngicGlobal.com

Pull Action Clamps
Part Numbers 34404, 34406, 34407

Spindle Type: U-Hook
Drawing Movement:
- 1.53" (34404)
- 2.00" (34406)
- 2.50" (34407)

Hook Size:
- M4 (34404)
- M6 (34406)
- M8 (34407)

- Flanged Base
- Standard Handle



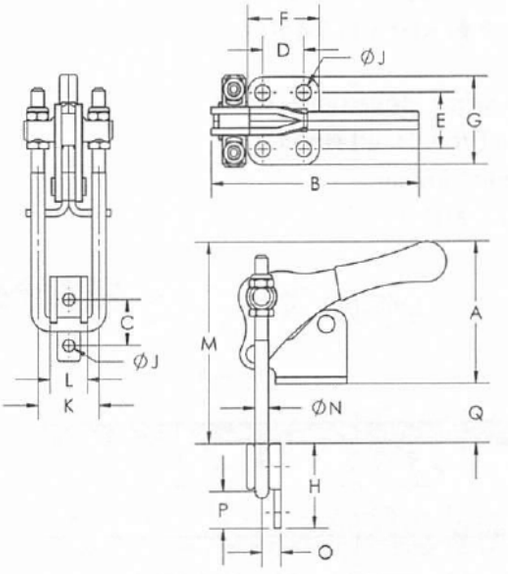

Part No.	A	B	C	D	E	F	G	H	J	K	L	M	N	O	P	Q Min	Q Max	Holding Capacity
34404	2.22	3.15	0.57	0.51	0.87	1.02	1.39	1.00	0.21	0.86	0.54	3.43	0.12	0.20	0.43	0.54	1.20	500
34406	2.86	4.71	0.81	0.75	1.02	1.30	1.56	1.50	0.28	1.06	0.67	4.36	0.23	0.25	0.64	0.54	1.50	1000
34407	3.60	5.25	1.06	1.25	1.47	1.86	2.11	2.13	0.35	1.74	1.19	5.75	0.31	0.50	0.79	2.14	2.11	2000

Pull Action Clamps
Part Numbers 34401, 34408, 34405

Spindle Type: U-Hook
Drawing Movement:
- 1.53" (34401)
- 2.00" (34408)
- 2.50" (34405)

Hook Size:
- M4 (34401)
- M6 (34408)
- M8 (34405)

- Flanged Base
- Standard Handle

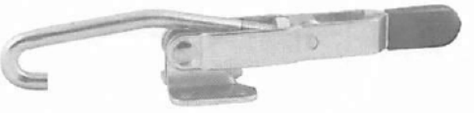

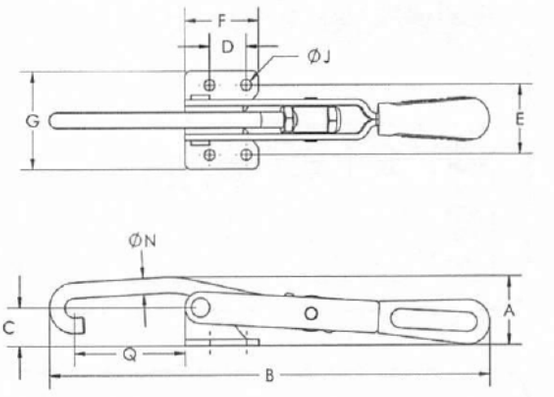

Part No.	A	B	C	D	E	F	G	J	N	Q Min	Q Max	Holding Capacity
34401	1.45	8.33	0.74	0.94	1.44	1.50	1.99	0.24	0.30	1.53	3.11	375
34408	2.17	11.46	0.96	1.25	1.97	1.86	2.61	0.35	0.39	2.70	3.44	750
34405	2.62	13.80	1.82	1.13	2.49	2.13	3.30	0.41	0.47	2.75	3.60	1000

ANGIC GLOBAL SOLUTIONS
Get quote
32-1274 • ww
Angic Global Solutions 1-888-872-0690
https://www.AngicGlobal.com Sales@AngicGlobal.com

TOGGLE CLAMPS

Pull Action Clamps
Part Numbers 34403

Drawing Movement: 4.00"
Bar Type: Fixed Hook
Flanged Base
Standard Handle



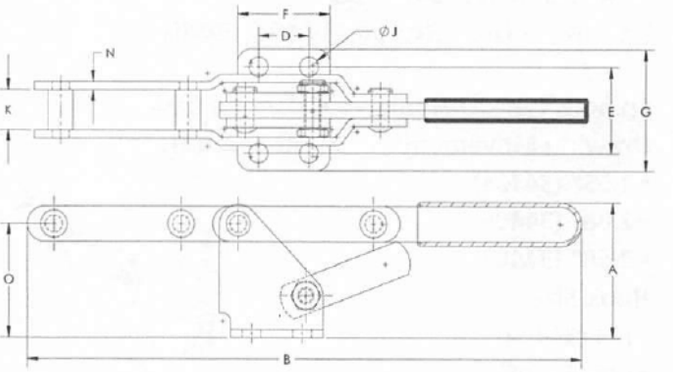

Part No.	A	B	D	E	F	G	J	K	N	O	Holding Capacity
34403	1.88	8.40	0.75	1.22	1.38	1.72	0.28	0.60	0.12	1.59	375

ACCESSORIES

Spindle Assemblies



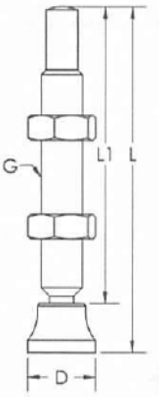

Part No.	D	G	L	L1
34541	0.63	3/8-16	3.62	3.22
34561	0.43	1/4-20	2.72	2.43
34540	0.47	5/16-18	3.48	3.11

Weldable Bolt Retainers



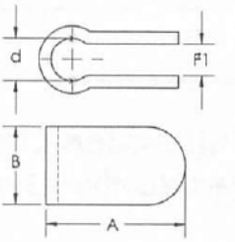

Part No.	A	B	F1	D
34550	1.20	0.64	0.25	0.32
34551	1.47	0.74	0.33	0.41
34552	1.70	1.19	0.38	0.67

Spindle Assemblies



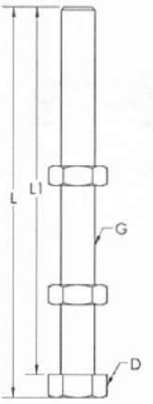

Part No.	D	G	L	L1
34514	0.55	3/8-16	3.23	3.00
34515	0.74	1/2-13	3.31	3.00
34560	0.43	1/4-20	1.65	1.50
34512	0.49	5/16-18	2.71	2.50

Get quote
2-1274 • www
Angic Global Solutions 1-888-872-0690
https://www.AngicGlobal.com Sales@AngicGlobal.com

HOIST RINGS



Safety Engineered..... 120-121

Stainless Safety Engineered 122

Safety Engineered –Kits 123

Bushing, Washer, Screw Kits.....124

Tuff Forged™ Swivel 125

Tuff Forged™ Side Pull 126

Forged.....126

Side Load 127

Large Opening Swivel & Pivot.....127

Pivot Lifting Plates.....128

Round Base Swivel & Pivot 129

Street Plate Lifting Rings.....130

Street Plate Nut.....131

Super Forged Eyebolt.....131

Alloy Steel Forged Rings 131

Lifting Rings 132

Safety Precautions 133-140

Get quote

Angic Global Solutions 1-888-872-0690
https://www.AngicGlobal.com Sales@AngicGlobal.com

HOIST RINGS

Safety Engineered Hoist Rings

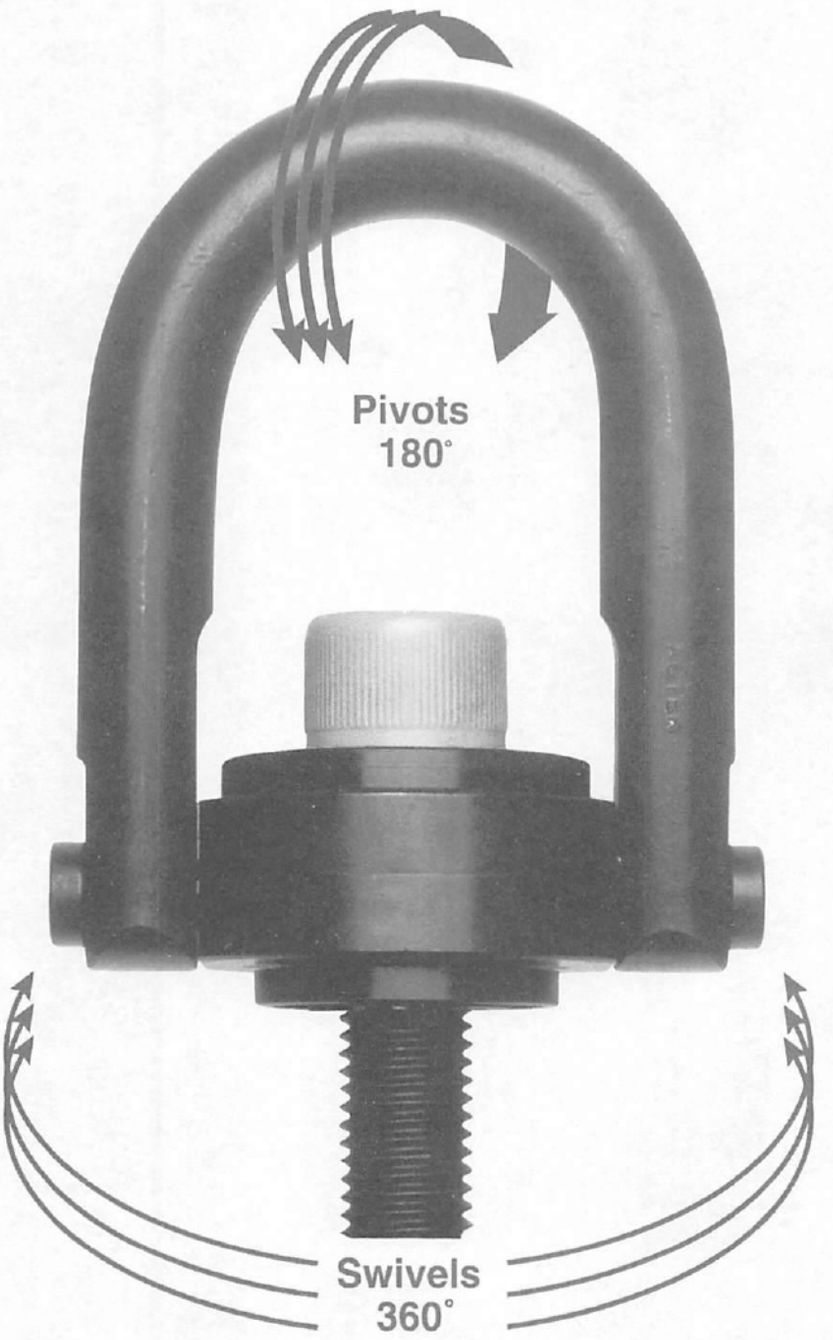

RATED LOAD from 400 lbs. to 125 tons

2-1274 • www
Get quote
Angic Global Solutions 1-888-872-0690
https://www.AngicGlobal.com Sales@AngicGlobal.com

Safety Engineered Hoist Rings

- Material: AISI 4140 Aircraft Quality
- Finish: Black oxide per mil spec. (cadmium plated available)
- Safety Factor: 5:1
- Certified heat treatment
- 100% magnetic particle inspected
- 200% proof-load tested, with serial number for traceability

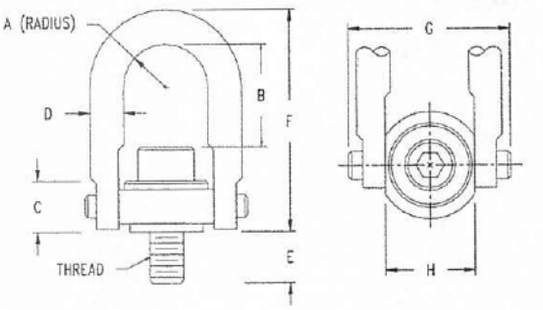

Inch

Rated Load (lbs.)	Thread Size	A	C	D	E	Standard U-Bar Part No.	B	F	Long U-Bar Part No.	B	F	G	H	Torque (Ft/lbs)	Wt. (lbs)
600	1/4-20	0.43	0.71	3/8	0.54	AK46100	1.27	2.67	–	–	–	1.84	1.00	6	0.3
800	5/16-18	0.43	0.71	3/8	0.29	AK46102	1.27	2.67	–	–	–	1.84	1.00	7	0.3
800	5/16-18	0.43	0.71	3/8	0.54	AK46104	1.27	2.67	–	–	–	1.84	1.00	7	0.3
1,000	3/8-16	0.43	0.71	3/8	0.54	AK46106	1.27	2.67	–	–	–	1.84	1.00	12	0.3
2,000	7/16-14	0.70	0.93	1/2	1.07	AK46606	1.90	3.77	–	–	–	2.58	1.49	22	1.0
2,500	1/2-13	0.70	0.93	1/2	1.07	AK46602	1.84	3.77	–	–	–	2.58	1.49	28	1.0
2,000	7/16-14	0.88	1.22	3/4	0.78	AK46000	2.37	4.78	AK46638	4.34	6.72	3.52	1.99	22	2.6
2,500	1/2-13	0.88	1.22	3/4	0.78	AK46008	2.31	4.78	AK46644	4.25	6.72	3.52	1.99	28	2.6
2,500	1/2-13	0.88	1.22	3/4	1.03	AK46010	2.31	4.78	AK46646	4.25	6.72	3.52	1.99	28	2.6
2,500	1/2-13	0.88	1.22	3/4	1.28	AK46012	2.31	4.78	AK46648	4.25	6.72	3.52	1.99	28	2.6
4,000	5/8-11	0.88	1.22	3/4	0.78	AK46002	2.18	4.78	–	–	–	3.52	1.99	60	2.6
4,000	5/8-11	0.88	1.22	3/4	1.03	AK46004	2.18	4.78	AK46640	4.12	6.72	3.52	1.99	60	2.6
4,000	5/8-11	0.88	1.22	3/4	1.28	AK46006	2.18	4.78	AK46642	4.12	6.72	3.52	1.99	60	2.6
5,000	3/4-10	0.88	1.22	3/4	1.03	AK46014	2.06	4.78	AK46650	4.00	6.72	3.52	1.99	100	3.0
5,000	3/4-10	0.88	1.22	3/4	1.53	AK46018	2.06	4.78	AK46654	4.00	6.72	3.52	1.99	100	3.0
7,000	3/4-10	1.40	1.71	1	1.04	AK46204	3.06	6.52	AK46658	4.65	8.11	5.14	3.00	100	7.0
7,000	3/4-10	1.40	1.71	1	1.54	AK46206	3.06	6.52	AK46660	4.65	8.11	5.14	3.00	100	7.0
8,000	7/8-9	1.40	1.71	1	1.04	AK46202	2.93	6.52	AK46656	4.52	8.11	5.14	3.00	160	7.0
8,000	7/8-9	1.40	1.71	1	1.29	AK46203	2.93	6.52	AK46652	4.52	8.11	5.14	3.00	160	7.0
10,000	1-8	1.40	1.71	1	1.29	AK46210	2.81	6.52	AK46662	4.40	8.11	5.14	3.00	230	7.5
10,000	1-8	1.40	1.71	1	1.54	AK46212	2.81	6.52	AK46664	4.40	8.11	5.14	3.00	230	7.5
10,000	1-8	1.40	1.71	1	2.29	AK46214	2.81	6.52	AK46666	4.40	8.11	5.14	3.00	230	7.5
15,000	1-1/4-7	1.75	2.11	1-1/4	1.89	AK46802	4.12	8.73	–	–	–	6.50	3.76	470	14.0
20,000	1-3/8-6	2.00	2.36	1-1/2	2.50	AK46702	5.20	10.59	–	–	–	7.46	4.31	540	22.0
24,000	1-1/2-6	2.25	2.81	1-3/4	2.70	AK46404	6.41	12.47	–	–	–	8.55	4.87	800	34.0
24,000	1-3/4-5	2.25	2.81	1-3/4	3.20	AK46408	6.41	12.47	–	–	–	8.55	4.87	800	34.0
30,000	2-4-1/2	2.25	2.81	1-3/4	3.20	AK46400	5.91	12.47	–	–	–	8.55	4.87	800	36.0
50,000	2-1/2-8	3.00	4.09	2-1/4	4.00	AK47002	8.03	16.87	–	–	–	11.67	6.52	2100	88.0
50,000	2-1/2-4	3.00	4.09	2-1/4	4.00	AK47006	8.03	16.87	–	–	–	11.67	6.52	2100	88.0
75,000	3-4	3.75	5.27	2-3/4	5.25	AK47200	8.48	19.50	–	–	–	14.15	8.10	4300	166.0
100,000	3-1/2-4	4.00	6.06	3-1/4	7.00	AK47402	9.28	22.09	–	–	–	15.90	8.60	5100	265.0
250,000	6-4	6.00	14.00	5	9.00	AK47602	14.00	33.00	–	–	–	25.00	13.00	9900	790.0

Metric

Rated Load (Kgs)	Thread Size	A	C	D	E	Standard U-Bar Part No.	B	F	Long U-Bar Part No.	B	F	G	H	Torque (N-M)	Wt. (Kgs)
400	M8x1.25	11	18	10	13	AK46912	32	68	–	–	–	47	25	9	0.17
500	M10x1.50	11	18	10	18	AK46916	30	68	–	–	–	47	25	16	0.17
1,050	M12x1.75	22	30	19	19	AK46924	60	121	AK47124	110	171	89	51	37	1.08
1,900	M16x2.00	22	30	19	29	AK46930	56	121	AK47130	106	171	89	51	80	1.12
2,150	M20x2.50	22	30	19	34	AK46936	52	121	AK47136	102	171	89	51	135	1.19
3,000	M20x2.50	36	43	25	32	AK46942	78	166	AK47142	118	206	131	76	135	3.03
4,200	M24x3.00	36	43	25	37	AK46948	74	166	AK47148	114	206	131	76	311	3.10
4,200	M30x3.50	36	43	25	58				AK46950	108	206	131	76	637	3.10
7,000	M30x3.50	45	54	32	42	AK46956	106	222	–	–	–	165	95	637	6.30
7,000	M30x3.50	45	54	32	62	AK46958	106	222	–	–	–	165	95	637	6.40
11,000	M36x4.00	57	71	44	64	AK46966	166	317	–	–	–	217	124	1085	15.50
12,500	M42x4.50	57	71	44	82	AK46968	160	317	–	–	–	217	124	1085	16.00
13,500	M48x5.00	57	71	44	82	AK46970	154	317	–	–	–	217	124	1085	16.80
22,300	M64x6.00	76	103	57	101	AK46972	204	428	–	–	–	296	165	2847	39.00
31,500	M72x6.00	95	133	70	132	AK46988	220	495	–	–	–	359	206	5830	74.00
44,600	M90x6.00	102	153	83	177	AK46990	235	561	–	–	–	404	218	6914	118.00

ANGIC GLOBAL SOLUTIONS
Get quote
832-1274 • w
Angic Global Solutions 1-888-872-0690
https://www.AngicGlobal.com Sales@AngicGlobal.com

HOIST RINGS

Stainless Steel Safety Engineered Hoist Rings

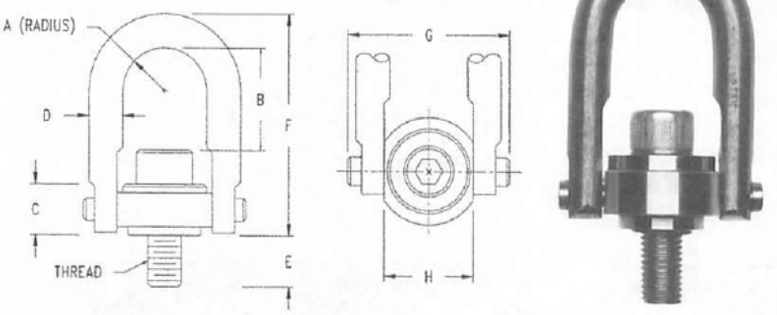

Designed for safe lifting! Safety engineered hoist rings rotate and pivot to absorb any pitch, roll or sway of unbalanced loads.

- Will not yield to heavy side loads. Helps prevent lifting hook from disengaging.
- Helps protect people and material against accidents.
- For use in outdoor weather and certain chemical and corrosive environments.
- Material: 316 series stainless steel
- Safety factor: 5:1
- Liquid penetrant mil 6868

Inch

Rated Load (lbs.)	Thread Size	A	C	D	E	Standard U-Bar Part No.	B	F	Long U-Bar Part No.	B	F	G	H	Torque (Ft/lbs)	Wt. (lbs)
400	5/16-18	0.43	0.71	3/8	0.29	AK58102	1.27	2.67	–	–	–	1.84	1.00	3.5	0.3
400	5/16-18	0.43	0.71	3/8	0.54	AK58104	1.27	2.67	–	–	–	1.84	1.00	3.5	0.3
500	3/8-16	0.43	0.71	3/8	0.54	AK58106	1.27	2.67	–	–	–	1.84	1.00	6	0.3
1,250	1/2-13	0.70	0.93	1/2	1.07	AK58602	1.84	3.77	–	–	–	2.58	1.49	14	1.0
1,250	1/2-13	0.88	1.22	3/4	0.78	AK58008	2.31	4.78	AK58644	4.25	6.72	3.52	1.99	14	2.6
1,250	1/2-13	0.88	1.22	3/4	1.03	AK58010	2.31	4.78	AK58646	4.25	6.72	3.52	1.99	14	2.6
1,250	1/2-13	0.88	1.22	3/4	1.28	AK58012	2.31	4.78	AK58648	4.25	6.72	3.52	1.99	14	2.6
2,000	5/8-11	0.88	1.22	3/4	0.78	AK58002	2.18	4.78	–	–	–	3.52	1.99	30	2.6
2,000	5/8-11	0.88	1.22	3/4	1.03	AK58004	2.18	4.78	AK58640	4.12	6.72	3.52	1.99	30	2.6
2,000	5/8-11	0.88	1.22	3/4	1.28	AK58006	2.18	4.78	AK58642	4.12	6.72	3.52	1.99	30	2.6
2,500	3/4-10	0.88	1.22	3/4	1.03	AK58014	2.06	4.78	AK58650	4.00	6.72	3.52	1.99	50	3.0
2,500	3/4-10	0.88	1.22	3/4	1.53	AK58018	2.06	4.78	AK58654	4.00	6.72	3.52	1.99	50	3.0
3,500	3/4-10	1.40	1.71	1	1.04	AK58204	3.06	6.52	AK58658	4.65	8.11	5.14	3.00	50	7.0
3,500	3/4-10	1.40	1.71	1	1.54	AK58206	3.06	6.52	AK58660	4.65	8.11	5.14	3.00	50	7.0
4,000	7/8-9	1.40	1.71	1	1.04	AK58202	2.93	6.52	AK58656	4.52	8.11	5.14	3.00	80	7.0
4,000	7/8-9	1.40	1.71	1	1.29	AK58203	2.93	6.52	AK58652	4.52	8.11	5.14	3.00	80	7.0
5,000	1-8	1.40	1.71	1	1.29	AK58210	2.81	6.52	AK58662	4.40	8.11	5.14	3.00	115	7.5
5,000	1-8	1.40	1.71	1	1.54	AK58212	2.81	6.52	AK58664	4.40	8.11	5.14	3.00	115	7.5
5,000	1-8	1.40	1.71	1	2.29	AK58214	2.81	6.52	AK58666	4.40	8.11	5.14	3.00	115	7.5
7,500	1-1/4-7	1.75	2.11	1-1/4	1.89	AK58802	4.12	8.73	–	–	–	6.50	3.76	235	14.0
12,000	1-1/2-6	2.25	2.81	1-3/4	2.70	AK58404	6.41	12.47	–	–	–	8.55	4.87	400	34.0
15,000	2-4-1/2	2.25	2.81	1-3/4	2.96	AK58400	5.91	12.47	–	–	–	8.55	4.87	400	36.0
25,000	2-1/2-8	3.00	4.09	2-1/4	4.00	AK59002	8.03	16.87	–	–	–	11.67	6.52	1050	88.0
25,000	2-1/2-4	3.00	4.09	2-1/4	4.00	AK59006	8.03	16.87	–	–	–	11.67	6.52	1050	88.0
37,500	3-4	3.75	5.27	2-3/4	4.20	AK59200	8.48	19.50	–	–	–	14.15	8.10	2150	166.0
50,000	3-1/2-4	4.00	6.06	3-1/4	7.00	AK59402	9.28	22.09	–	–	–	15.90	8.60	2550	265.0

Metric

Rated Load (Kgs)	Thread Size	A	C	D	E	Standard U-Bar Part No.	B	F	Long U-Bar Part No.	B	F	G	H	Torque (N-M)	Wt. (Kgs)
200	M8x1.25	11	18	10	13	AK58912	32	68	–	–	–	47	25	4	0.17
250	M10x1.50	11	18	10	18	AK58916	30	68	–	–	–	47	25	8	0.17
525	M12x1.75	22	30	19	19	AK58924	60	121	AK59124	110	171	89	51	18	1.08
950	M16x2.00	22	30	19	29	AK58930	56	121	AK59130	106	171	89	51	40	1.12
1,075	M20x2.50	22	30	19	34	AK58936	52	121	AK59136	102	171	89	51	68	1.19
1,500	M20x2.50	36	43	25	32	AK58942	78	166	AK59142	118	206	131	76	68	3.03
2,100	M24x3.00	36	43	25	37	AK58948	74	166	AK59148	114	206	131	76	108	3.10
2,100	M30x3.50	36	43	25	58				AK58950	108	206	131	76	108	3.10
3,500	M30x3.50	45	54	32	42	AK58956	106	222	–	–	–	165	95	318	6.30
3,500	M30x3.50	45	54	32	62	AK58958	106	222	–	–	–	165	95	318	6.40
5,500	M36x4.00	57	71	44	64	AK58966	166	317	–	–	–	217	124	542	15.50
6,250	M42x4.50	57	71	44	82	AK58968	160	317	–	–	–	217	124	542	16.00
6,750	M48x5.00	57	71	44	82	AK58970	154	317	–	–	–	217	124	542	16.80
11,150	M64x6.00	76	103	57	101	AK58972	204	428	–	–	–	296	165	1423	39.00
15,750	M72x6.00	95	133	70	132	AK58988	220	495	–	–	–	359	206	2915	74.00
22,300	M90x6.00	102	153	83	177	AK58990	235	561	–	–	–	404	218	3459	118.00

9 2-1274 • www
Get quote
Angic Global Solutions 1-888-872-0690
https://www.AngicGlobal.com Sales@AngicGlobal.com

Safety Engineered Hoist Ring Kits

This kit enables you to custom assemble the precise swivel hoist ring required for the job. Kits are available in standard and metric sizes, and come complete with U-Bar (body and sub-assembly), screws, bushings, washers and E-rings – enough to configure over 24 different hoist ring sizes and capacities! A handy accessory kit for lifting and moving heavy loads, and a must for your tool crib.





AK46306 Hoist Ring Kit
(Kit includes 4 of each item) — **Total Weight 31 lbs.**





Sub Assembly	Rated Load (Lbs)	Screw	Screw Size	Thread Length	Bushing	Washer	E-Ring
AK46108 3/8" U-BAR	600 800 1,000	AK46139 AK46144 AK46146	1/4-20 x 1-1/4 5/6-18 x 1-1/4 3/8-16 x 1-1/4	1/2" 1/2" 1/2"	AK46112 AK46128 AK46152	AK46120 AK46126 AK46148	AK46133 AK46134 AK46136
AK46600 1/2" U-BAR	2,000 2,500	AK46614 AK46636	7/16-18 x 2 1/2-13 x 2	1" 1"	AK46618 AK46628	AK46616 AK46626	AK46612 AK46036
AK46020 3/4" U-BAR	4,000 5,000	AK46044 AK46054	5/8-11x 2-1/4 3/4-10 x 2-1/4	1" 1"	AK46028 AK46074	AK46026 AK46068	AK46034 AK46038

AK46304 Hoist Ring Kit
(Kit includes 4 of each item) — **Total Weight 71.5 lbs.**

Sub Assembly	Rated Load (Lbs)	Screw	Screw Size	Thread Length	Bushing	Washer	E-Ring
AK46020 3/4" U-BAR	2,500 4,000 5,000	AK46050 AK46044 AK46054	1/2-13 x 2-1/4 5/8-11 x 2-1/4 3/4-10 x 2-1/4	1" 1" 1"	AK46072 AK46028 AK46074	AK46066 AK46026 AK46068	AK46036 AK46034 AK46038
AK46220 1" U-BAR	7,000 8,000 10,000	AK46246 AK46242 AK46250	3/4-10 x 3-1/4 7/8-9 x 2-3/4 1-8 x 3	1-1/2" 1" 1-1/4"	AK46272 AK46228 AK46274	AK46266 AK46226 AK46268	AK46038 AK46234 AK46238

AK46904 Hoist Ring Kit
(Kit includes 4 of each item) — **Total Weight 71.5 lbs.**

Sub Assembly	Rated Load (Lbs)	Screw	Screw Size	Thread Length	Bushing	Washer	E-Ring
AK46020 3/4" U-BAR	1,050 1,900 2,150	AK49048 AK49056 AK49054	M12 x 1.75 x 50 M16 x 2.00 x 60 M20 x 2.50 x 65	19 29 34	AK49072 AK49028 AK49074	AK49066 AK49026 AK49068	AK49122 AK46034 AK46038
AK46220 1" U-BAR	3,000 4,200 4,200	AK49244 AK49250 AK49242	M20 x 2.50 x 75 M24 x 3.00 x 80 M30 x 3.50 x 100	32 37 38	AK49272 AK49274 AK49228	AK49266 AK49268 AK49226	AK46038 AK46228 AK46834

ANGIC GLOBAL SOLUTIONS
Get quote
332-1274 • ww
Angic Global Solutions 1-888-872-0690
https://www.AngicGlobal.com Sales@AngicGlobal.com

HOIST RINGS

Bushing, Washer, Screw Kits

- Aircraft quality "chrome moly" AISI 4140
- Certified heat treatment
- 100% magnetic particle inspected
- Thread sizes available from 1/4" to 2-1/2"
- Change your load rating from 2,500 lbs. to 5,000 lbs. by changing the bushing, washer, and screw.

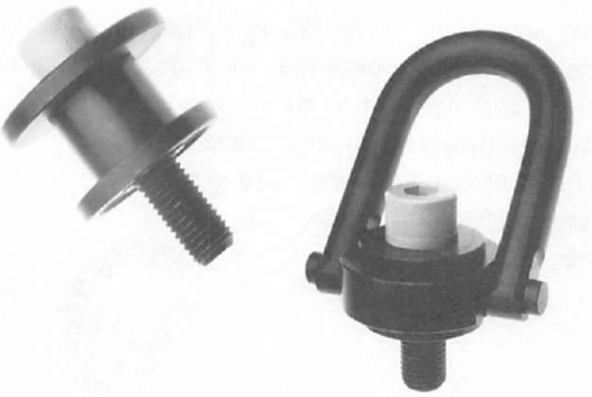

Bushing, Washer Screw Set	Corresponding Hoist Ring	Rated Load (lbs.)	Thread Size	Washer	Bushing	Screw	Screw Size
AK46139-BW	AK46100	600	1/4-20	AK46120	AK46112	AK46139	1/4-20 x .54 x 1-1/4
AK46142-BW	AK46102	800	5/16-18	AK46126	AK46128	AK46142	5/16-18 X .29 X 1
AK46144-BW	AK46104	800	5/16-18	"	"	AK46144	5/16-18 X .54 X 1-1/4
AK46146-BW	AK46106	1,000	3/8-16	AK46148	AK46152	AK46146	3/8-16 X .54 X 1-1/4
AK46614-BW	AK46606	2,000	7/16-14	AK46616	AK46618	AK46614	7/16 X 1.07 X 2
AK46636-BW	AK46602	2,500	1/2-13	AK46626	AK46628	AK46636	1/2-13 X 1.07 X 2
AK46076-BW	AK46000	2,000	7/16-14	AK46064	AK46070	AK46076	7/16-14 X .78 X 2
"	*AK46638	2,000	7/16-14	"	"	"	"
AK46048-BW	AK46008	2,500	1/2-13	AK46066	AK46072	AK46048	1/2-13 X .78 X 2
"	*AK46644	2,500	1/2-13	"	"	"	"
AK46050-BW	AK46010	2,500	1/2-13	"	"	AK46050	1/2-13 X 1.03 X 2-1/4
"	*AK46646	2,500	1/2-13	"	"	"	"
AK46052-BW	AK46012	2,500	1/2-13	"	"	AK46052	1/2-13 X 1.28 X 2-1/2
"	*AK46648	2,500	1/2-13	"	"	"	"
AK46056-BW	AK46002	4,000	5/8-11	AK46026	AK46028	AK46056	5/8-11 X .78 X 2
AK46044-BW	AK46004	4,000	5/8-11	"	"	AK46044	5/8-11 X 1.03 X 2-1/4
"	*AK46640	4,000	5/8-11	"	"	"	"
AK46046-BW	AK46006	4,000	5/8-11	"	"	AK46046	5/8-11 X 1.28 X 2-1/2
"	*AK46642	4,000	5/8-11	"	"	"	"
AK46054-BW	AK46014	5,000	3/4-10	AK46068	AK46074	AK46054	3/4-10 X 1.03 X 2-1/4
"	*AK46650	5,000	3/4-10	"	"	"	"
AK46058-BW	AK46018	5,000	3/4-10	"	"	AK46058	3/4-10 X 1.53 X 2-3/4
"	*AK46654	5,000	3/4-10	"	"	"	"
AK46244-BW	AK46204	7,000	3/4-10	AK46266	AK46272	AK46244	3/4-10 X 1.04 X 2-3/4
"	*AK46658	7,000	3/4-10	"	"	"	"
AK46246-BW	AK46206	7,000	3/4-10	"	"	AK46246	3/4-10 X 1.54 X 3-1/4
"	*AK46660	7,000	3/4-10	"	"	"	"
AK46242-BW	AK46202	8,000	7/8-9	AK46226	AK46228	AK46242	7/8-9 X 1.04 X 2-3/4
"	*AK46656	8,000	7/8-9	"	"	"	"
AK46241-BW	AK46208	8,000	7/8-9	"	"	AK46241	7/8-9 X 1.79 X 3-1/2
AK46250-BW	AK46210	10,000	1-8	AK46268	AK46274	AK46250	1-8 X 1.29 X 3
"	*AK46662	10,000	1-8	"	"	"	"
AK46252-BW	AK46212	10,000	1-8	"	"	AK46252	1-8 X 1.54 X 3-1/4
"	*AK46664	10,000	1-8	"	"	"	"
AK46254-BW	AK46214	10,000	1-8	"	"	AK46254	1-8 X 2.29 X 4
"	*AK46666	10,000	1-8	"	"	"	"
AK46842-BW	AK46802	15,000	1-1/4-7	AK46826	AK46828	AK46842	1-1/4-7 X 1.89 X 4
AK46444-BW	AK46404	24,000	1-1/2-6	AK46426	AK46428	AK46444	1-1/2-6 X 2.70 X 5-1/2
AK46450-BW	AK46400	30,000	2-4-1/2	AK46526	AK46528	AK46450	2-4-1/2 X 2.96 X 5-3/4
AK47052-BW	AK47002	50,000	2-1/2-8	AK47026	AK47028	AK47052	2-1/2-8 X 4 X 8
AK47056-BW	AK47006	50,000	2-1/2-4	"	"	AK47056	"
AK47252-BW	AK47200	75,000	3-4	AK47226	AK47228	AK47252	3-4 X 5.25 X 10-1/2

* Long Bar

9 2-1274 • www
ANGIC
Get quote
Angic Global Solutions 1-888-872-0690
https://www.AngicGlobal.com Sales@AngicGlobal.com

Tuff Forged™ Swivel Hoist Rings

Swivels 360 degrees – pivots 180 degrees

- Material: Alloy Certified Aircraft Quality
- Finish: Phosphate per DOD-P-16232F (cadmium plated available)
- Certified heat treatment
- 100% magnetic particle inspected
- Rated loads from 600-24,000 lbs.
- 200% proof-load tested, with serial number for traceability
- Safety Factor: 5:1

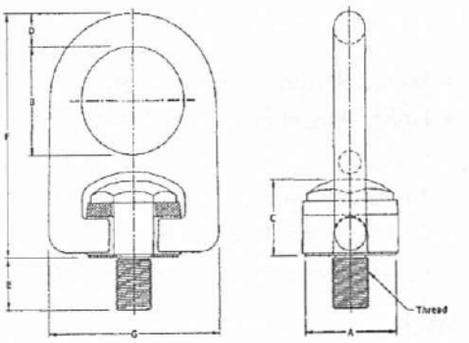

Inch

Part No.	Rated Load (lbs.)	Thread Size	A	B	C	D	E	F	G	Torque (Ft/lbs)	Wt. (lbs.)
AK56100	600	1/4-20	1.23	1.40	1.16	0.44	0.50	3.29	2.38	5	1.0
AK56102	800	5/16-18	1.23	1.40	1.16	0.44	0.50	3.29	2.38	7	1.0
AK56104	800	5/16-18	1.23	1.40	1.16	0.44	1.00	3.29	2.39	7	1.0
AK56106	1,000	3/8-16	1.23	1.40	1.16	0.44	0.50	3.29	2.38	12	1.0
AK56107	1,000	3/8-16	1.23	1.40	1.16	0.44	1.00	3.29	2.38	12	1.0
AK56008	2,500	1/2-13	2.10	2.40	1.97	0.75	0.75	5.60	4.05	28	4.0
AK56010	2,500	1/2-13	2.10	2.40	1.97	0.75	1.00	5.60	4.05	28	4.0
AK56012	2,500	1/2-13	2.10	2.40	1.97	0.75	1.25	5.60	4.05	28	4.0
AK56002	4,000	5/8-11	2.10	2.40	1.97	0.75	0.75	5.60	4.05	60	4.0
AK56004	4,000	5/8-11	2.10	2.40	1.97	0.75	1.00	5.60	4.05	60	4.0
AK56006	4,000	5/8-11	2.10	2.40	1.97	0.75	1.25	5.60	4.05	60	4.0
AK56014	5,000	3/4-10	2.10	2.40	1.97	0.75	1.00	5.60	4.05	100	4.0
AK56018	5,000	3/4-10	2.10	2.40	1.97	0.75	1.50	5.60	4.05	100	4.0
AK56204	7,000	3/4-10	2.80	3.20	2.62	1.00	1.00	7.48	5.40	100	9.0
AK56203	7,000	3/4-10	2.80	3.20	2.62	1.00	1.25	7.48	5.40	100	9.0
AK56206	7,000	3/4-10	2.80	3.20	2.62	1.00	1.50	7.48	5.40	100	9.0
AK56202	8,000	7/8-9	2.80	3.20	2.62	1.00	1.00	7.48	5.40	160	9.0
AK56205	8,000	7/8-9	2.80	3.20	2.62	1.00	1.25	7.48	5.40	160	9.0
AK56210	10,000	1-8	2.80	3.20	2.62	1.00	1.25	7.48	5.40	230	9.0
AK56212	10,000	1-8	2.80	3.20	2.62	1.00	1.50	7.48	5.40	230	9.0
AK56214	10,000	1-8	2.80	3.20	2.62	1.00	2.25	9.35	5.40	230	9.0
AK56802	15,000	1-1/4-7	3.50	4.00	3.28	1.25	2.00	9.35	6.75	470	18.0
AK56804	15,000	1-1/4-7	3.50	4.00	3.28	1.25	2.75	9.35	6.75	470	18.0
AK56702	20,000	1-3/8-6	3.50	4.00	3.28	1.25	2.75	9.35	6.75	540	19.0
AK56404	24,000	1-1/2-6	3.50	4.00	3.28	1.25	2.75	9.35	6.75	800	19.0



Metric

Part No.	Rated Load (Kgs.)	Thread Size	A	B	C	D	(mm) E	F	G	Torque (Kgm)	Wt. (lbs.)
AK56912	400	M8x1.25	1.23	1.40	1.16	0.44	15	3.29	2.38	9	1.0
AK56914	400	M8x1.25	1.23	1.40	1.16	0.44	20	3.29	2.38	9	1.0
AK56916	500	M10x1.50	1.23	1.40	1.16	0.44	15	3.29	2.39	16	1.0
AK56918	500	M10x1.50	1.23	1.40	1.16	0.44	25	3.29	2.38	16	1.0
AK56924	1,050	M12x1.75	2.10	2.40	1.97	0.75	25	5.60	4.05	37	4.0
AK56926	1,050	M12x1.75	2.10	2.40	1.97	0.75	35	5.60	4.05	37	4.0
AK56930	1,900	M16x2.00	2.10	2.40	1.97	0.75	25	5.60	4.05	80	4.0
AK56932	1,900	M16x2.00	2.10	2.40	1.97	0.75	35	5.60	4.05	80	4.0
AK56936	2,150	M20x2.50	2.10	2.40	1.97	0.75	25	5.60	4.05	135	4.0
AK56938	2,150	M20x2.50	2.10	2.40	1.97	0.75	40	5.60	4.05	135	4.0
AK56942	3,000	M20x2.50	2.80	3.20	2.62	1.00	30	7.48	5.40	135	9.0
AK56946	4,200	M24x3.00	2.80	3.20	2.62	1.00	30	7.48	5.40	311	9.0
AK56948	4,200	M24x3.00	2.80	3.20	2.62	1.00	40	7.48	5.40	311	9.0
AK56949	4,200	M30x3.50	2.80	3.20	2.62	1.00	40	7.48	5.40	637	9.0
AK56950	4,200	M30x3.50	2.80	3.20	2.62	1.00	50	7.48	5.40	637	9.0
AK56956	7,000	M30x3.50	3.50	4.00	3.28	1.25	50	9.35	6.75	637	19.0
AK56960	7,000	M33x3.50	3.50	4.00	3.28	1.25	55	9.35	6.75	637	19.0
AK56966	11,000	M36x4.00	3.50	4.00	3.28	1.25	65	9.35	6.75	1085	20.0
AK56968	12,500	M42x4.50	3.50	4.00	3.28	1.25	85	9.35	6.75	1085	21.0

ANGIC GLOBAL SOLUTIONS
Get quote
Angic Global Solutions 1-888-872-0690
https://www.AngicGlobal.com Sales@AngicGlobal.com

HOIST RINGS

Tuff Forged™ Side Pull Hoist Ring
Swivels 360 degrees

- Material: Alloy "chrome moly"
- Finish: Phosphate per DOD-P-16232F
- Safety Factor: 5:1 (*side pull direction only)
- 100% magnetic particle inspected
- Certified heat treatment
- Rated loads from 1,000 lbs. to 5,000 lbs.



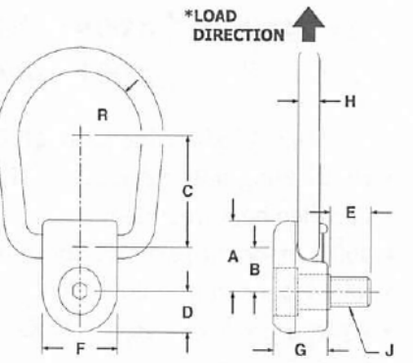

Inch

Part No.	Rated Load (lbs.)	Thread Size	A	B	C	D	E	F	G	H	J	R	Wt. (lbs.)
AK68210	1,000	3/8-16	1-1/8	5/8	1-1/2	5/8	5/8	1-1/4	7/8	5/16	3/8-16	13/16	.7
AK68220	2,000	1/2-13	1-5/8	7/8	1-7/8	7/8	3/4	1-3/4	1-5/16	7/16	1/2-13	1-1/8	1.7
AK68225	2,500	5/8-11	1-5/8	7/8	1-7/8	7/8	7/8	1-3/4	1-5/16	7/16	5/8-11	1-1/8	1.7
AK68250	5,000	3/4-10	2-3/16	1-1/8	2-3/4	1	1	2	1-11/16	5/8	3/4-10	1-3/8	3.5

Metric

Part No.	Rated Load (lbs.)	Thread Size	A	B	C	D	E	F	G	H	J	R	Wt. (lbs.)
AK68310	1,000	M10x1.50	1-1/8	5/8	1-1/2	5/8	0.6	1-1/4	7/8	5/16	M10x1.50	13/16	.7
AK68320	2,000	M12x1.75	1-5/8	7/8	1-7/8	7/8	0.7	1-3/4	1-5/16	7/16	M12x1.75	1-1/8	1.7
AK68325	2,500	M16x2.00	1-5/8	7/8	1-7/8	7/8	0.8	1-3/4	1-5/16	7/16	M16x2.00	1-1/8	1.7
AK68350	5,000	M20x2.50	2-3/16	1-1/8	2-3/4	1	1	2	1-11/16	5/8	M20x2.50	1-3/8	3.5

Forged Hoist Rings

- Pivots a full 180 degrees, but do not rotate
- Fixed mounting plate holds ring secure
- Material: Aircraft Quality Alloy "chrome moly"
- Finish: Black oxide per mil spec.
- Certified heat treatment
- 100% magnetic particle inspected
- Rated loads from 2,000 to 20,000 lbs.
- Safety Factor: 6:1

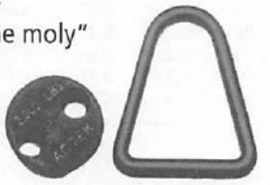

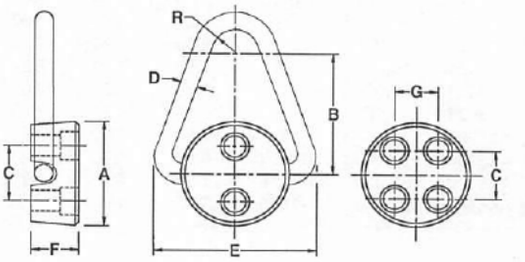

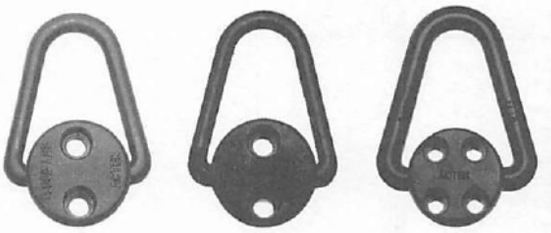

To obtain maximum load capacity, high strength alloy screws must be used.

Hoist Ring Part No.	Standard Screw Part No.	Standard Screw Thread Size	Standard Screw Screw Length	Metric Screw Part No.	Metric Screw Thread Size	Metric Screw Screw Length	Wt. (lbs.)
AK68060	AK46144	5/16-18	1-1/4	AK49142	M8x1.25	30	.10
AK68070	AK46146	3/8-16	1-1/4	AK49146	M10x1.50	35	.10
AK68080	AK46048	1/2-13	2	AK49048	M12x1.75	50	.20
AK68090	AK46052	1/2-13	2-1/2	AK49048	M12x1.75	50	.20
AK68100	AK46043	5/8-11	3	AK49056	M16x2.00	60	.30

Hoist Ring Part No.	Rated Load (lbs)	Dia. A	B	C	D	E	F	G	R	Torque (Ft/lbs)	Wt. (lbs.)
AK68060	2,000	1-3/4	2	1	5/16	2-1/2	3/4	–	1/2	4-7	.75
AK68070	2,500	2-1/4	2-1/2	1-1/8	3/8	3-3/16	7/8	–	5/8	7-10	1.25
AK68080	5,000	2-5/8	3	1-1/2	1/2	3-7/8	1-1/8	–	3/4	20-25	2.00
AK68090	12,000	3-1/8	4	1-5/8	3/4	5-1/8	1-3/8	1-1/4	7/8	20-25	4.00
AK68100	20,00	3-5/8	5	2-1/16	1	6-3/8	1-7/8	1-1/4	1	30-35	7.50

Strong and tough! Ideal for lifting boxes or containers, as well as anchor or tiedown applications

9 2-1274 • www
Get quote
Angic Global Solutions 1-888-872-0690
https://www.AngicGlobal.com Sales@AngicGlobal.com

Side Load Hoist Rings

Swivels 360 degrees – pivots 180 degrees



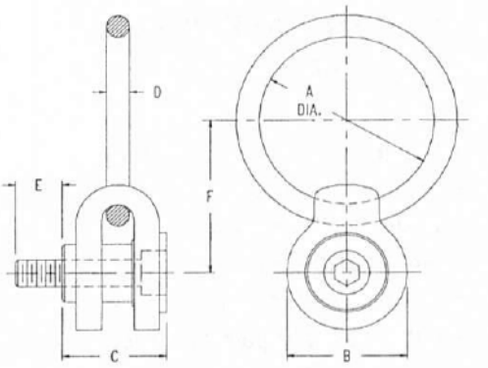

- Designed for side-mounted applications
- Extra large rings accept many styles and sizes of hoist hooks
- Material: Aircraft Quality Alloy with black oxide finish per mil spec. (cadmium plated available)
- Certified heat treatment
- 100% magnetic particle inspected
- Thread size from 5/16" to 2"
- Rated loads from 650 to 29,000 lbs.
- Safety Factor: 5:1

Smooth swiveling and pivoting action!



Ideal for stamping and injection mold industries

Inch

Part No.	Rated Load (lbs.)	Thread Size	A	B	C	D	E	F	G	Torque (Ft/lbs)	Wt. (lbs.)
AK43510	650	5/16-18	2	1-1/2	1-7/16	3/8	5/8	1-15/16	3/8	3.5	.5
AK43515	800	3/8-16	2	1-1/2	1-7/16	3/8	3/4	1-15/16	3/8	4.5	.5
AK43520	1,800	1/2-13	3	2-3/8	2-1/4	5/8	1	3	1/2	15	3.5
AK43525	2,500	5/8-11	3	2-3/8	2-1/4	5/8	1-1/4	3	1/2	25	3.5
AK43530	4,000	3/4-10	4	3-3/4	3-3/8	1	1-1/2	4-1/2	3/4	50	11.5
AK43535	5,500	7/8-9	4	3-3/4	3-3/8	1	2	4-1/2	3/4	80	11.5
AK43540	7,000	1-8	4	3-3/4	3-3/8	1	2	4-1/2	3/4	90	11.5
AK43545	14,000	1-1/4-7	6	4-5/8	4-5/8	1-3/8	2	6-1/4	1	150	28.0
AK43550	17,000	1-1/2-6	6	4-5/8	4-5/8	1-3/8	2-1/2	6-1/4	1	250	31.5
AK43555	29,000	2-4-1/2	5-1/4x10-1/2	4-5/8	6-5/8	1-1/2	3-1/8	11-1/8	1	300	42.0

Metric

Part No.	Rated Load (Kgs)	Thread Size	A	B	C	D	E	F	G	Torque (Ft/lbs)	Wt. (lbs)
AK43560	325	M8x1.25	2	1-1/2	1-7/16	3/8	16	1-15/16	3/8	3.5	.5
AK43565	500	M10x1.50	2	1-1/2	1-7/16	3/8	20	1-15/16	3/8	4.5	.5
AK43570	725	M12x1.75	3	2-3/8	2-1/4	5/8	24	3	1/2	15	3.5
AK43575	1,400	M16x2.00	3	2-3/8	2-1/4	5/8	31	3	1/2	25	3.5
AK43580	2,290	M20x2.50	4	3-3/4	3-3/8	1	40	4-1/2	3/4	50	11.5
AK43585	3,050	M24x3.00	4	3-3/4	3-3/8	1	47	4-1/2	3/4	80	11.5
AK43590	4,850	M30x3.50	6	4-5/8	4-5/8	1-3/8	44	6-1/4	1	150	28

Large Opening Swivel & Pivot Hoist Rings

Swivels 360 degrees – Pivots 180 degrees



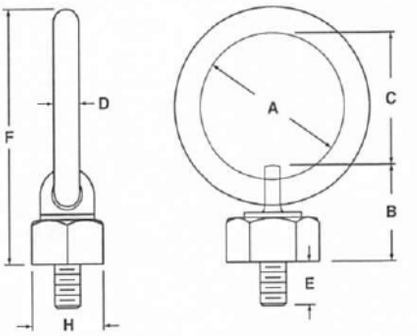

- Die and mold makers will like the way this ring reacts to laying down and rolling the dies and molds over.
- Extra large rings accept many styles/sizes of hoist hooks
- Material: Aircraft Quality Alloy with black oxide finish per mil spec. (cadmium plated available)
- Certified heat treatment
- 100% magnetic particle inspected
- Rated loads from 800 to 10,000 lbs.
- Safety Factor: 4:1

Smooth swiveling and pivoting action!

Inch and Metric

INCH Part No.	Rated Load (lbs)	METRIC Part No.	Rated Load (lbs)	A	B	C	D	E	F	H	INCH Thread Size	METRIC Thread Size	Wt. (lbs.)
AK42620	800	AK42920	400	2	1.48	1.75	3/8	1/2	3.60	1	5/16-18	M8x1.25	.7
AK42630	1,000	AK42930	500	2	1.48	1.75	3/8	5/8	3.60	1	3/8-16	M10x1.50	.7
AK42640	2,500	AK42940	1,050	3	2.68	2.57	5/8	3/4	5.87	1-3/4	1/2-13	M12x1.75	3.0
AK42650	4,000	AK42950	1,900	3	2.68	2.57	5/8	1	5.87	1-3/4	5/8-11	M16x2.00	3.0
AK42660	7,000	AK42960	2,150	4	4.25	3.31	1	1-1/4	8.56	2-3/4	3/4-10	M20x2.50	9.5
AK42670	10,000	AK42970	4,200	4	4.25	3.31	1	1-1/2	8.56	2-3/4	1-8	M24x3.00	9.5

ANGIC GLOBAL SOLUTIONS

Get quote

Angic Global Solutions 1-888-872-0690

https://www.AngicGlobal.com Sales@AngicGlobal.com

Pivot Lifting Plates
Pivots 180 degrees

- Material: Aircraft Quality Alloy
- Finish: Black oxide per mil spec. (cadmium plated available)
- Safety Factor: 5:1
- Certified heat treatment
- 100% magnetic particle inspected
- Large bail pivots 180°
- Ideal for certain OEM applications
- Rugged tapered plate minimizes shear force on high strength alloy screw
- Base plate can be welded into position, thus eliminating the use of screws
- Use high tensile alloy screw equivalent to Grade 8



Cap Screws Not Included

To obtain maximum load capacity, high strength alloy screws must be used.

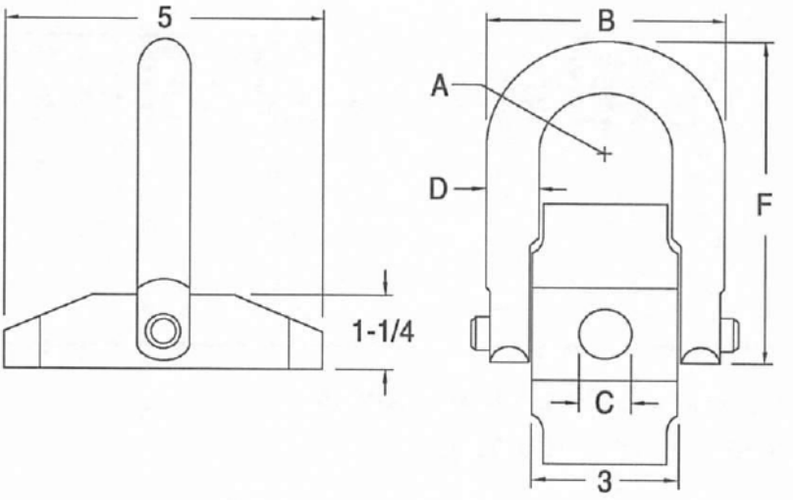

Part No.	Rated Load (lbs)	A	B	C	D	F	Thread Size	Torque Ft/lbs	Wt. (lbs.)
AK44410	7,000	1.40	4-13/16	3/4	1	6-1/2	3/4-10	100	6.8
AK44415	8,000	1.40	4-13/16	7/8	1	6-1/2	7/8-9	160	6.7
AK44420	10,000	1.40	4-13/16	1	1	6-1/2	1-8	230	6.7

* Long Bar

Get quote
Angic Global Solutions 1-888-872-0690
https://www.AngicGlobal.com Sales@AngicGlobal.com

Round Base Swivel & Pivot Hoist Rings

Swivels 360 degrees – Pivots 180 degrees

- Material: Aircraft Quality Alloy
- Finish: Black oxide per mil spec. (cadmium plated available)
- Safety Factor: 5:1
- Certified heat treatment
- 100% magnetic particle inspected
- Direct mounting
- Wide round base helps distribute shear loads
- Rated load capacities from 2,500 lbs. to 20,000 lbs.
- Many OEM applications
- Perfect for pre-cast concrete products: simply cast a threaded anchor or stud into the concrete part. Mount the hoist ring and you have an easy, safe lifting/handling application.

NOTE: Thread engagement should be 1-1/2 times the diameter of the equivalent of Grade 8 alloy screws.



Cap Screws Not Included

To obtain maximum load capacity, high strength alloy screws must be used.

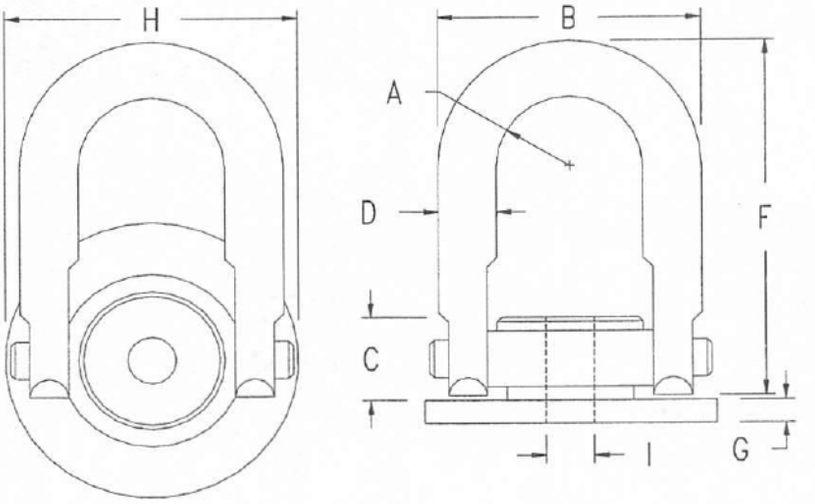

Part No.	Rated Load (lbs)	A	B	C	D	F	G	H	I	Thread Size	Torque Ft/lbs	Wt. (lbs.)
AK44646	2,500	0.88	3-1/4	1-7/64	3/4	6-3/4	1/4	3.5	1/2	1/2-13	28	3.5
AK44642	4,000	0.88	3-1/4	1-7/64	3/4	6-3/4	1/4	3.5	5/8	5/8-11	60	3.5
AK44654	5,000	0.88	3-1/4	1-7/64	3/4	6-3/4	1/4	3.5	3/4	3/4-10	100	3.5
AK44660	7,000	1.40	4-13/16	1-1/2	1	8-7/64	13/32	5.0	3/4	3/4-10	100	9.0
AK44656	8,000	1.40	4-13/16	1-1/2	1	8-7/64	13/32	5.0	7/8	7/8-9	160	9.0
AK44666	10,000	1.40	4-13/16	1-1/2	1	8-7/64	13/32	5.0	1	1-8	230	9.0
AK44802	15,000	1.75	6	1-7/8	1-1/4	8-3/4	1/2	7.0	1-1/4	1-1/4-7	470	17.0
AK44704	20,000	2.00	7-11/32	2	1-1/2	10-3/16	1/2	7.0	1-1/2	1-1/2-6	800	24.0

ANGIC
Get quote
832-1274 • w
Angic Global Solutions 1-888-872-0690
https://www.AngicGlobal.com Sales@AngicGlobal.com

HOIST RINGS

Street Plate Lifting Ring

Swivels 360 degrees – Pivots 180 degrees



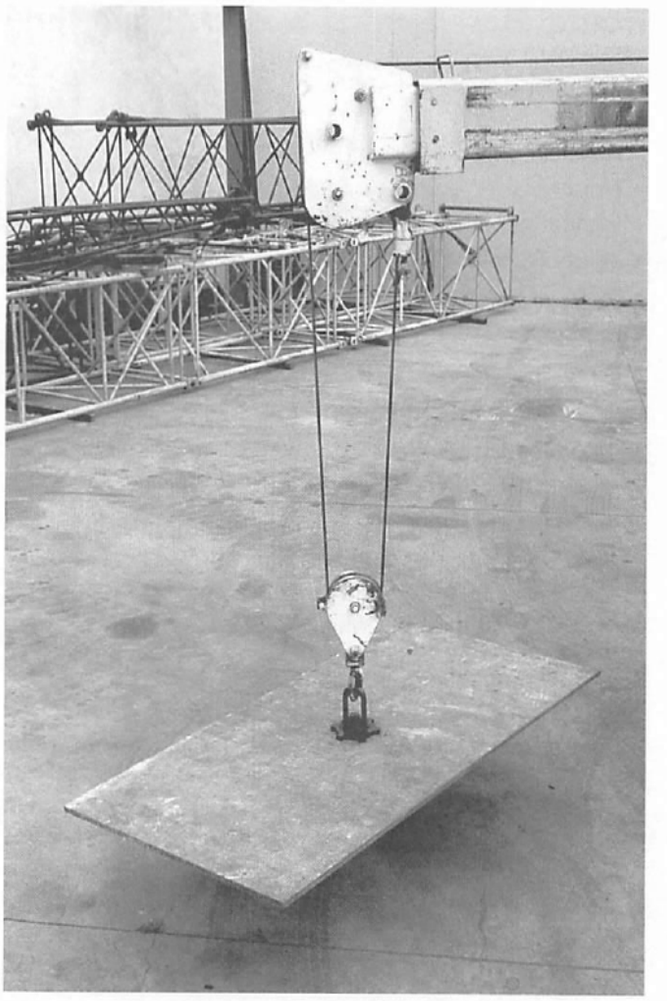

- Steel trench plates are used to cover trenches in streets and roadways in order to facilitate traffic flow during construction or repair.
- Street Plate Lifting Ring lugs are used for tightening and loosening with hammer or steel bar.
- The Street Plate Lifting Ring is used by utility companies, contractors and trench plate rental companies.

- Material: 4140 Certified Aircraft Quality
- Finish: Black oxide per mil spec. (cadmium plated available)
- Safety Factor: 5:1
- Certified heat treatment
- 100% magnetic particle inspected

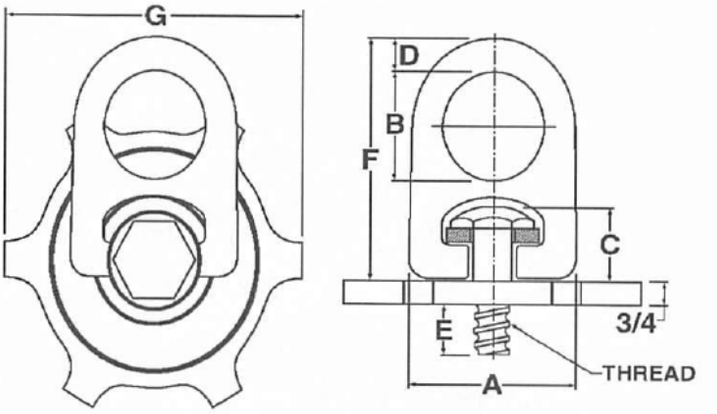

Part No.	Rated Load (lbs.)	A	B	C	D	E	F	G	Thread Type	Thread Size	Wt. (lbs.)
AK38215	10,000	5.40	3.20	2.62	1	1	7.48	7	Coil	1-1/4	16.0
AK38225	10,000	5.40	3.20	2.62	1	1-1/2	7.48	7	Coil	1-1/2	16.0
AK38235	10,000	5.40	3.20	2.62	1	1	7.48	7	Acme	1-1/4	16.0
AK38245	10,000	5.40	3.20	2.62	1	1-1/2	7.48	7	Acme	1-1/2	16.0
AK38865	15,000	6.75	4	3.28	1-1/4	1	9.35	9	Coil	1-1/4	28.0
AK38875	15,000	6.75	4	3.28	1-1/4	1-1/2	9.35	9	Coil	1-1/2	28.0
AK38885	15,000	6.75	4	3.28	1-1/4	1	9.35	9	Acme	1-1/4	28.0
AK38895	15,000	6.75	4	3.28	1-1/4	1-1/2	9.35	9	Acme	1-1/2	28.0

9 2-1274 • www
ANGIC
Get quote
Angic Global Solutions 1-888-872-0690
https://www.AngicGlobal.com Sales@AngicGlobal.com

Street Plate Nut

- Material: Aircraft Quality Alloy
- Certified heat treatment
- 100% magnetic particle inspected
- Welding Rod-Alloy #7018



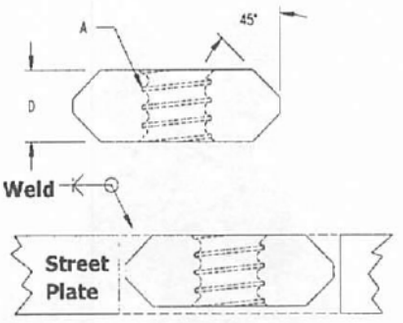

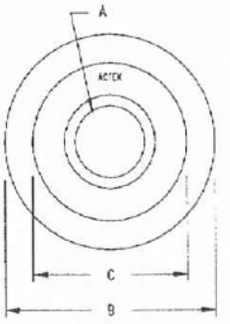

Part No.	Thread Type	Thread Size (A)	B	C	D
AK48812	Coil	1-1/4"-3.5	3	2-1/8	3/4
AK48815	Coil	1-1/4"-3.5	3	2-1/8	7/8
AK48822	Coil	1-1/4"-3.5	3	2-1/8	1
AK48816	Coil	1-1/4"-3.5	3	2-1/8	1-1/4
AK48817	Coil	1-1/4"-3.5	3	2-1/8	1-1/2
AK48804	Coil	1-1/2"-3.5	3-1/2	2-3/8	1
AK48806	Coil	1-1/2"-3.5	3-1/2	2-3/8	1-1/4
AK48856	Coil	1-1/2"-3.5	3-1/2	2-3/8	1-1/2
AK48820	Acme	1-1/4"-5	3	2-1/8	1
AK48824	Acme	1-1/2"-5	3-1/2	2-3/8	1
AK48826	Coil	1-1/2"-3.5	3-1/2	2-3/8	1-1/2

Super Forged Eyebolt

- Aircraft quality "chrome moly"
- Certified heat treatment
- 100% magnetic particle inspected
- Galvanized for outdoor use
- A "rugged" eyebolt that is designed for lifting

Note: Rated Capacity is for STRAIGHT LIFTS – angle lifts should be avoided.



AVAILABLE IN UNC AND ACME THREAD SIZES

Part No.	Rated Load	Thread Size	Thread Length
AK48650	8,000	1-1/4-3.5 Coil	1.0
AK48660	10,000	1-1/2-3.5 Coil	1.5

Alloy Steel Forged Rings

- Sizes from 3/8 x 2" to 1-1/2 x 6"
- Certified heat treated
- Load ratings from 1,500 lbs. to 31,300 lbs.



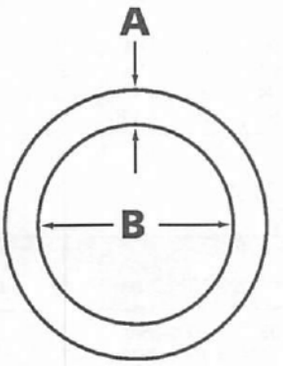

A = Specify size required
B = Specify size required

Part No.	Working Load Limits(lbs)	Diameter Stock A	Inside Diameter B
AK43122	1,500	3/8	2
AK43022	6,100	5/8	3
AK43322	9,100	3/4	4
AK43222	18,400	1	4
AK43822	23,200	1-3/8	6
AK43422	31,300	1-1/2	6

832-1274 • w

ANGIC GLOBAL SOLUTIONS

Get quote

Angic Global Solutions 1-888-872-0690
https://www.AngicGlobal.com Sales@AngicGlobal.com

HOIST RINGS

Lifting Ring

Swivels 360 degrees – Pivots 90 degrees

- Material: Aircraft Quality Alloy
- Finish: Black oxide per mil spec. (cadmium plated available)
- Designed for side mounting applications
- Great for dies and molds
- Rated load from 650 - 15,000 lbs.
- Safety Factor: 4:1
- Certified heat treatment
- 100% magnetic particle inspected

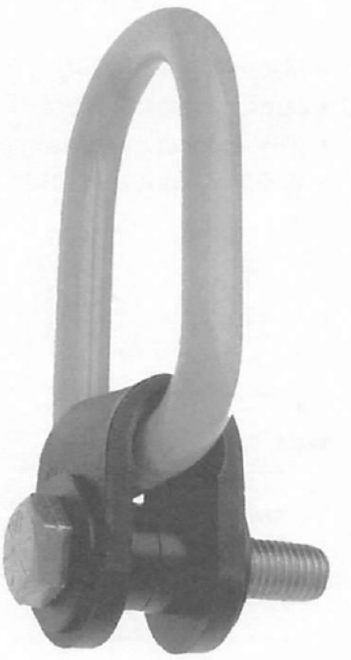

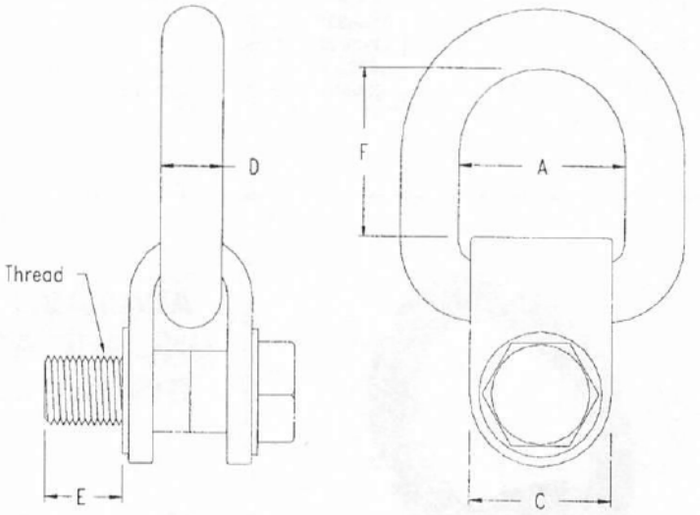

Inch (color coded yellow)

Part No. D-Ring	Part No. Long D-Ring	Rated Load(lbs)	Thread Size	A	C	D	E	D-Ring	F Long D-Ring	Torque (Ft/Lbs)	Wt. (lbs.)
AK43700	–	650	5/16-18	1-7/8	1-1/2	5/8	0.75	2	–	7	1.7
AK43710	AK43711	2,000	1/2-13	1-7/8	1-1/2	5/8	1.25	2.5	3.5	28	2.0
AK43720	AK43721	2,500	5/8-11	1-7/8	1-1/2	5/8	1.25	2.5	3.5	60	2.0
AK43730	AK43731	5,000	3/4-10	2-1/4	2	3/4	2	3	4	100	3.5
AK43740	AK43741	6,500	7/8-9	2-1/4	2	3/4	2	3	4	160	4.0
AK43750	AK43751	7,000	1-8	2-1/4	2	3/4	2	3	4	230	4.0
AK43760	AK43761	12,000	1-1/4-7	3-1/4	3	1-1/8	2.5	4	5.5	470	11.0
AK43770	AK43771	15,000	1-1/2-6	3-1/4	3	1-1/8	3	4	5.5	800	13.0

Metric (color coded blue)

Part No. D-Ring	Part No. Long D-Ring	Rated Load(Kgs)	Thread Size	A	C	D	E	D-Ring	F Long D-Ring	Torque (Kgm)	Wt. (lbs.)
AK43900	–	300	M8x1.25	1-7/8	1-1/2	5/8	25	2	–	0.86	1.7
AK43905	–	400	M10x1.50	1-1/2	1-1/4	5/16	25	2	–	1.5	1.8
AK43910	AK43911	1,000	M12x1.75	1-7/8	1-1/2	5/8	35	2.5	3.5	3.7	2.0
AK43920	AK43921	1,050	M16x2.00	1-7/8	1-1/2	5/8	35	2.5	3.5	8.4	2.0
AK43930	AK43931	2,150	M20x2.50	2-1/4	2	3/4	50	3	4	14	3.5
AK43940	AK43941	3,000	M24x3.00	2-1/4	2	3/4	50	3	4	31	3.7
AK43950	AK43951	5,000	M30x3.50	3-1/4	3	1-1/8	70	4	5.5	60	11.0
AK43960	AK43961	7,000	M36x4.00	3-1/4	3	1-1/8	70	4	5.5	100	13.0

Get quote
Angic Global Solutions 1-888-872-0690
https://www.AngicGlobal.com Sales@AngicGlobal.com

HOIST RING SAFETY INFORMATION

Do's & Don'ts of Installing and Using Hoist Rings

DO:

- **ALWAYS READ SAFETY PRECAUTION PAGE PRIOR TO USE OR INSTALLATION.**
- **ALWAYS INSPECT THE HOIST RING BEFORE EACH USE.**
- Regularly inspect all hoist ring parts.
- Always tighten the screw to the recommended torque value.
- Always make sure that the hoist ring is free to pivot and swivel in all directions.
- Always choose a hoist ring with the proper load rating. See the "Actual Load" equation on page 151 to help you choose the appropriate hoist ring.
- Always make sure that the bushing of the hoist ring sits flush against the object being lifted.
- Install hoist rings in materials that have a tensile strength of at least 80,000 psi.
- Always make sure the thread engagement is at least 1.5 times the diameter of the hoist ring screw.
- When installing a hoist ring in a through-hole with a nut and washer, make sure to use a Grade 8 nut that has full thread engagement.
- Consider periodic load-testing as an extra precaution.

DON'T:

- **NEVER EXCEED RATED LOAD.**
- **NEVER APPLY SHOCK LOAD.**
- Never use a hoist ring that you believe is damaged.
- Never use a hoist ring that has damaged threads on the screw.
- Never use a hoist ring in an application where it does not pivot and swivel in every direction freely.
- Never use a hoist ring that is not tightened to the recommended torque.
- Never replace the components of the hoist ring with anything other than TE-CO recommended parts.
- Never use a hook larger than the diameter of the hoist ring opening.
- Never shim or use washers between the hoist ring and surface of object being lifted.

Hoist Ring Inspection & Maintenance

ALWAYS INSPECT THE HOIST RING BEFORE EACH USE! MAKE SURE THAT:

- **The screw is tightened to the recommended torque.** If the screw is not tightened, the threads may be stripped on a vertical lift.
- **The bushing of the hoist ring sits flush against the object being lifted.** This ensures that the recommended torque puts the proper preload onto the hoist ring, allowing the hoist ring to reach its full 5:1 safety factor.
- **The hoist ring is free to swivel and pivot in every direction.** If the hoist ring binds up in any direction, it should be removed from service.
- **There are no signs of corrosion.** This can cause deterioration to the hoist ring material, allowing for fatigue or cracking to take place. It may also prevent the hoist ring from pivoting and swiveling freely.
- **There are no signs of damage, wear or cracks – especially on the screw, shoulder pins, and bail –** which may be an indication that the hoist ring is coming into contact with something during use. This should be avoided as such contact can cause binding and shock loads which exceed the rating of the hoist ring.
- **The shoulder pins are secure and do not rotate or come loose.** This can be checked by using pliers to rotate the shoulder pins by hand. If the shoulder pin does rotate, it is no longer securely in place and could come loose, causing the hoist ring to break.

332-1274 • ww
Get quote
Angic Global Solutions 1-888-872-0690
https://www.AngicGlobal.com Sales@AngicGlobal.com

HOIST RINGS

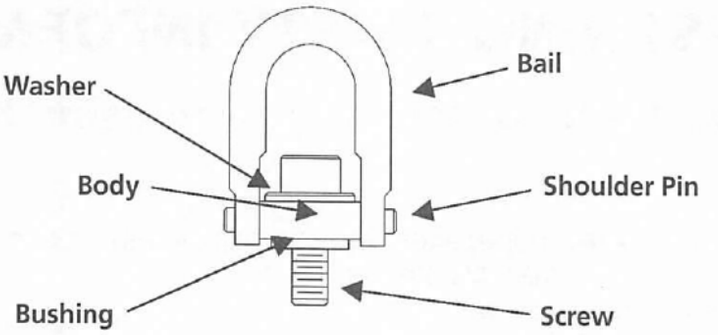

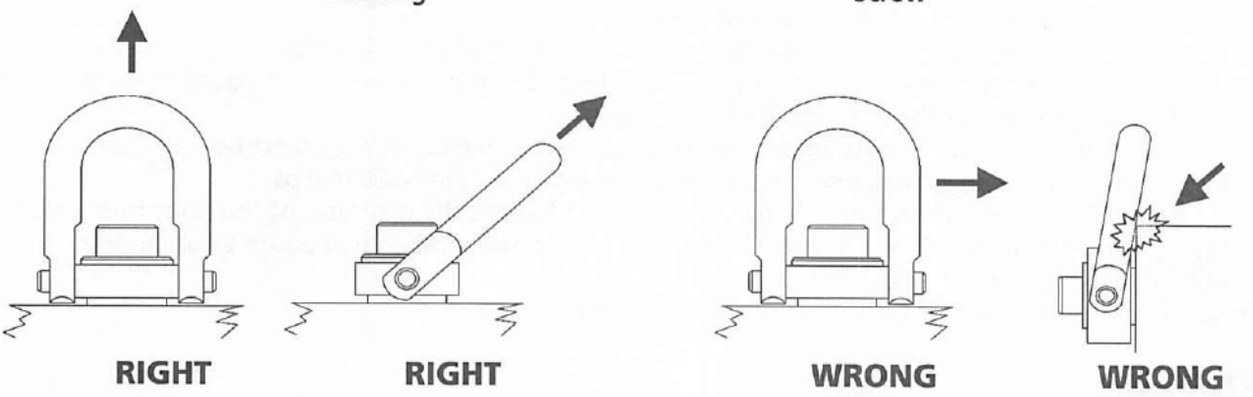

Important: The load on each hoist ring is **not** simply total weight divided by the number of hoist rings. The resultant force can be significantly greater at shallow lift angles and with unevenly distributed loads. See the example and chart below.

L = Load experienced by hoist ring
W = Total weight = 2,000 Lbs.
N = Number of hoist rings = 4
A = Lifting angle

$$L = \frac{W}{N \sin A}$$

If A = 60:

$$L = \frac{2000}{4 \sin 60} = 577 \text{ lbs.}$$

If A = 20:

$$L = \frac{2000}{4 \sin 20} = 1{,}462 \text{ lbs.}$$

Lifting Angle (Degrees)	Number of Hoist Rings	Weight of Load (Pounds)	Actual Applied Load on Hoist Ring (Pounds)
90	4	2,000	500
80	4	2,000	510
70	4	2,000	535
60	4	2,000	580
50	4	2,000	655
40	4	2,000	780
30	4	2,000	1,000
20	4	2,000	1,465

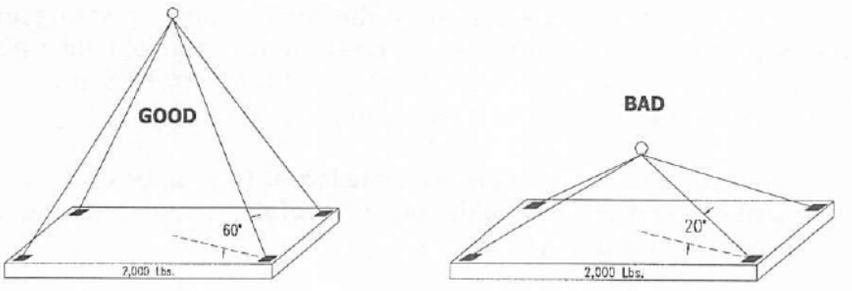

Get quote
Angic Global Solutions 1-888-872-0690
https://www.AngicGlobal.com Sales@AngicGlobal.com

Swivel Hoist Rings vs. Shouldered Eyebolt

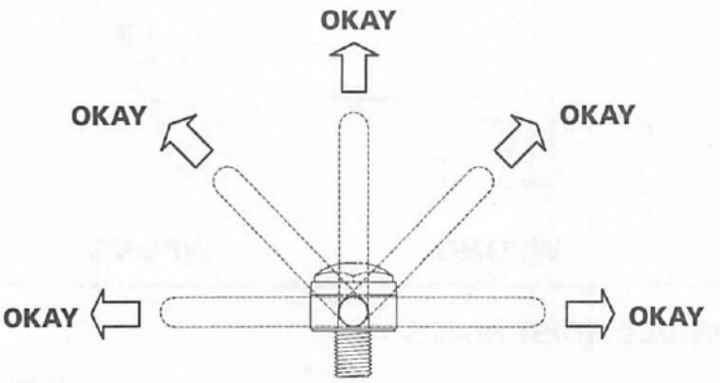

SWIVEL HOIST RING
Same load rating at any angle

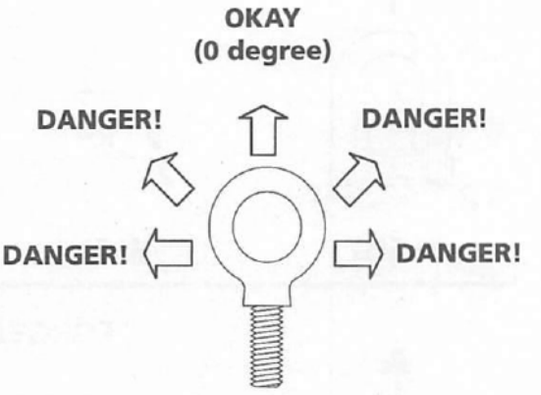

SHOULDERED EYEBOLT
Load rating good only for zero degree

Eyebolts have been used for over 100 years. They do a good job when used **properly – meaning the direction of the load must be at zero degree**. If the load shifts or the direction of loading on the eyebolt is as much as 10 degrees off the zero line of force, the result is a bent eyebolt. ***When you bend the eyebolt, it is broken!***

You can't see the break most of the time. If you examine the bent area using x-ray, you will find the damage. *Continued use of the eyebolt will lead to failure.*

Swivel Hoist Rings are designed for lifting at any angle because they can swivel 360° and pivot 180°. Therefore, the rated load remains the same regardless of the angle of force. The result is **increased safety and peace of mind**.

Hoist Ring Product Safety Facts

WARNING: PRIOR TO USING ANY HOIST RING, PLEASE READ THE FOLLOWING FOR PROPER INSTALLATION AND USAGE:

- As with all mechanical devices, regular inspection for wear and strict adherence to use instruction is necessary to prevent misuse failure.
- Despite the 5:1 safety factor, **NEVER EXCEED THE RATED LOAD CAPACITY**. This safety margin is necessary in case of misuse, which could drastically lower load capacity.
- Tighten mounting screws to torque recommended. Periodically check torque because screws could loosen in extended service.
- Tensile strength of parent material should be above 80,000 PSI to achieve full load rating. For weaker material, consider through-hole mounting with a nut and washer on the other side.
- **DO NOT APPLY SHOCK LOADS.** Always lift gradually. Repeat magnaflux testing if shock loading occurs.
- **Make sure the hoist ring pivots and rotates freely in all directions.**
- **Rated load will be reduced based on different angles of the loading.**

Important: The load on each hoist ring is not simply total weight divided by the number of hoist rings. The resultant force can be significantly greater at shallow lift angles and with unevenly distributed loads. See the example on the following page.

ANGIC
Get quote
32-1274 • ww
Angic Global Solutions 1-888-872-0690
https://www.AngicGlobal.com Sales@AngicGlobal.com

HOIST RINGS

SAFTEY ENGINEERED SWIVEL HOIST RINGS

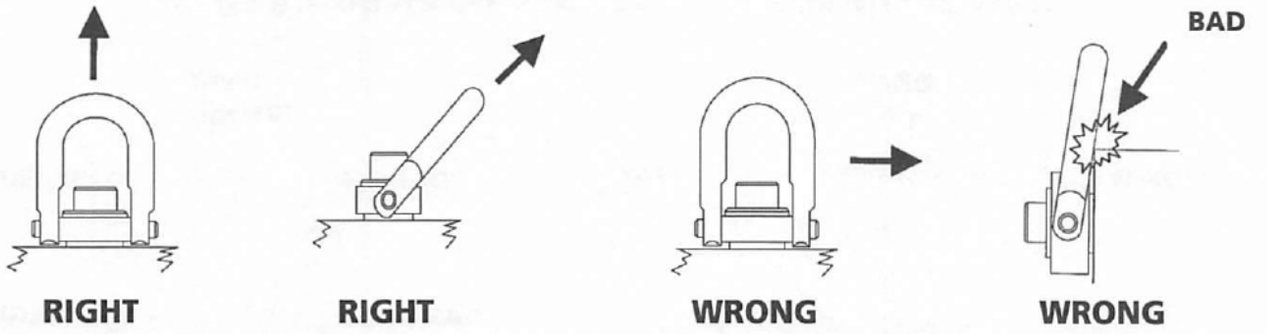

FORGED SWIVEL HOIST RINGS

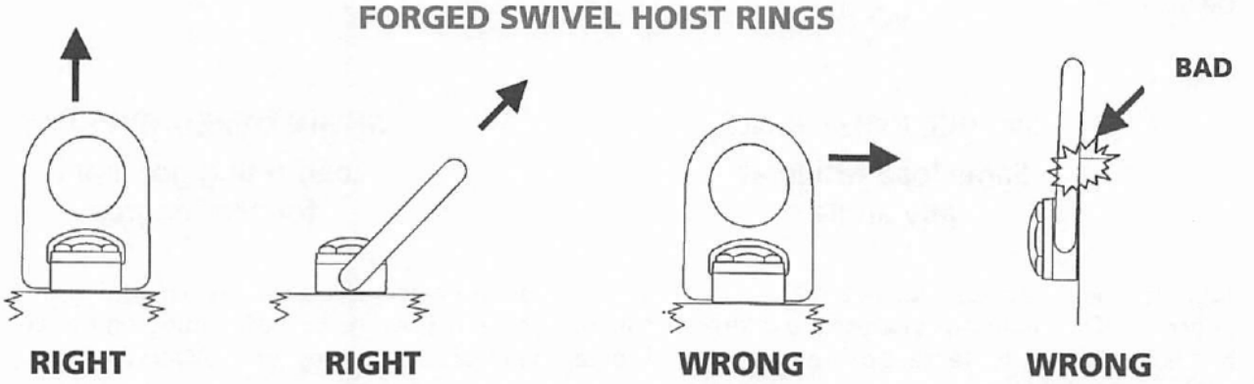

STAINLESS STEEL SWIVEL HOIST RINGS

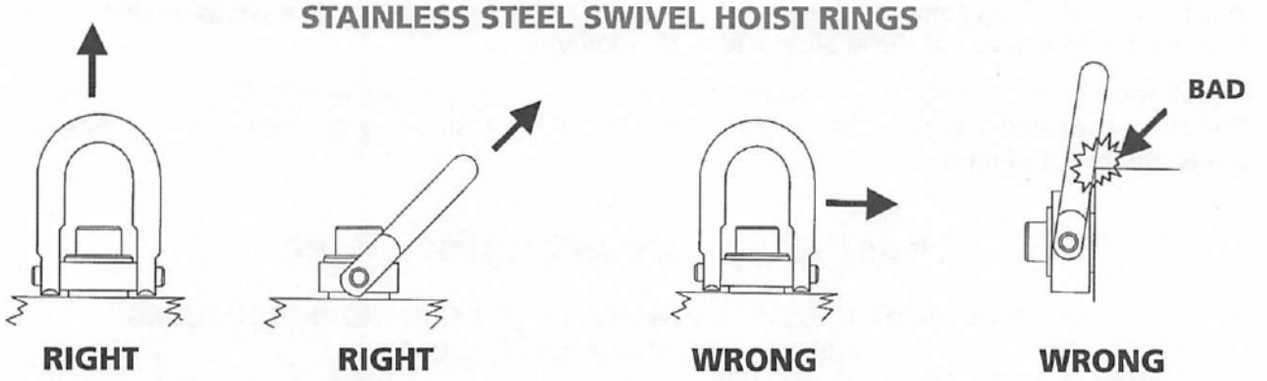

SIDE LOAD HOIST RINGS

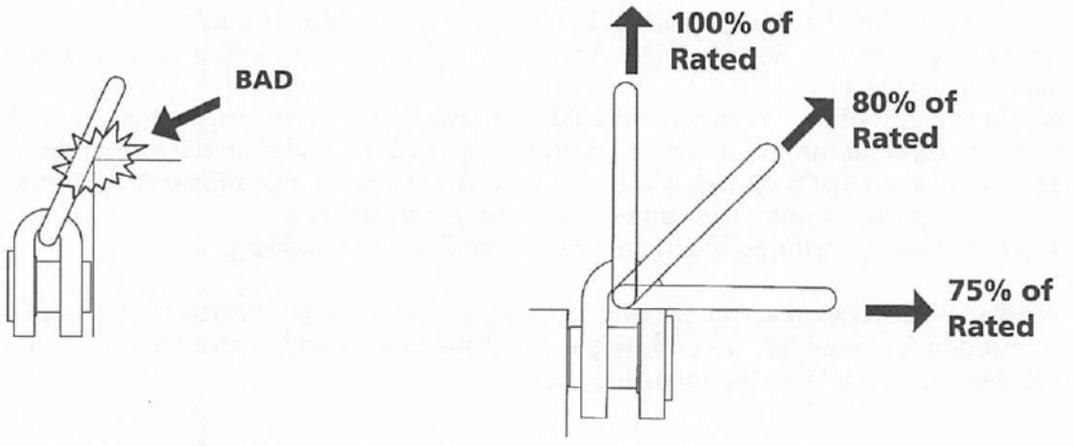

Get quote
Angic Global Solutions 1-888-872-0690
https://www.AngicGlobal.com Sales@AngicGlobal.com

HOIST RINGS

LIFTING RINGS

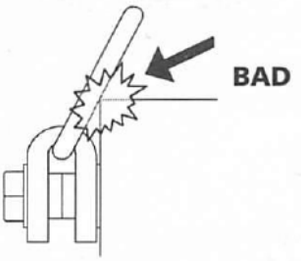

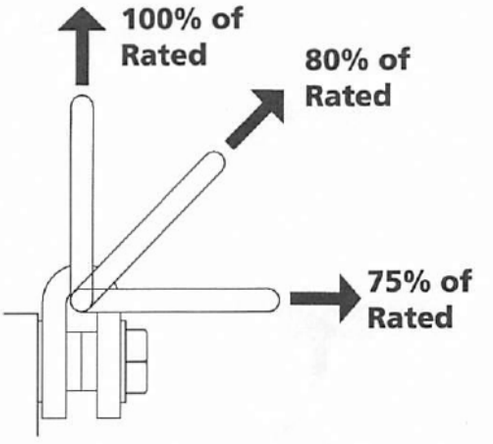

SIDE PULL HOIST RING

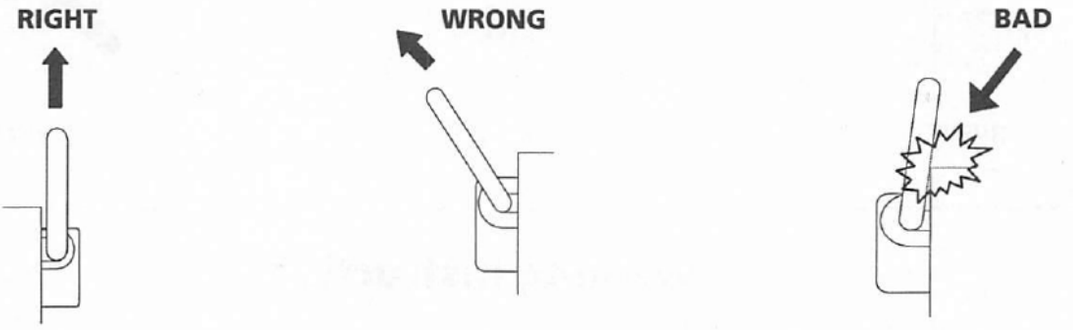

FORGED HOIST RING

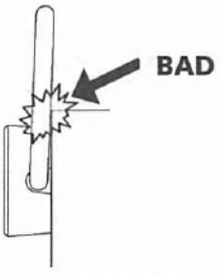

LARGE OPENING HOIST RING

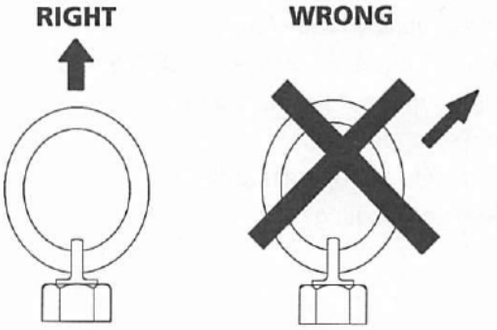

ROUND BASE SWIVEL & PIVOT HOIST RING

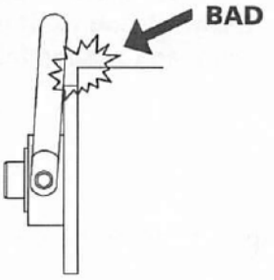

PIVOT LIFTING PLATE

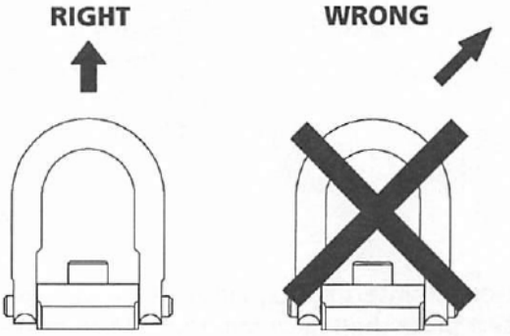

Get quote
32-1274 • ww
Angic Global Solutions 1-888-872-0690
https://www.AngicGlobal.com Sales@AngicGlobal.com

STREET PLATE LIFTING RING

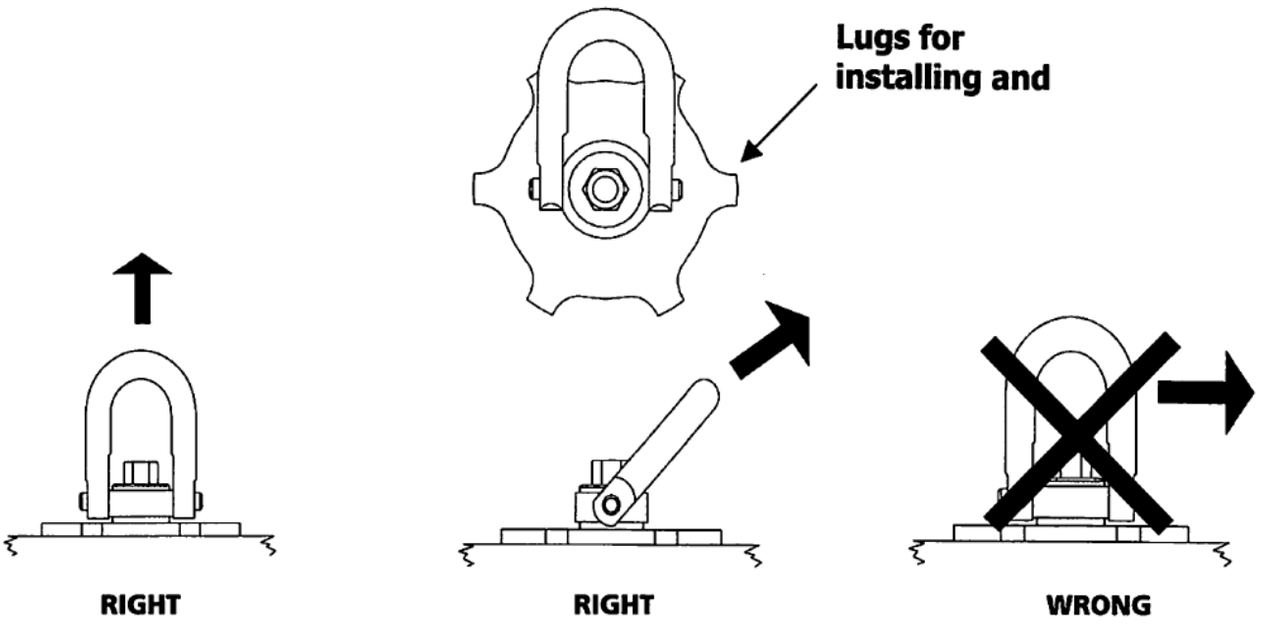

Welding Instruction

- Nut plate should have 1/8" clearance to trench plate
- It is allowable to replace an old nut if all previous weld metal is removed
- Use jig to make sure threaded plate is flush and square with top surface of trench plate
- Preheat plate to 450°-700°F
- Weld using Lincoln Jet Weld #ED010558 LH 70 - E7018 or 7024 - 3/16 dia. rod or equivalent
- Back-gouge root to sound metal
- Weld second side
- Grind weld on top surface flush
- Allow slow cooling

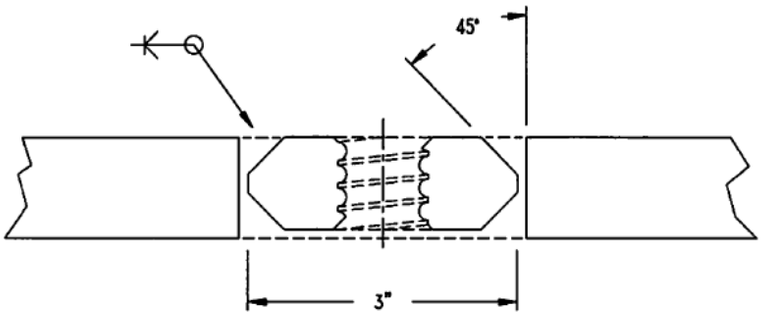

NOTE: After the nut has been welded to the plate, surfaces of the weld must be ground to the same surface level as the trench plate. This procedure allows the hoist ring to sit flush against the trench plate surface. Failure to do so will cause the hoist ring to sit improperly, and will lead to usage failure.

Material

- Threaded insert plate made from AISI 4140 steel, quench and tempered to Hardness Rockwell C 28-34
- Insert plate shall have minimum 1" thickness
- Shape can be square or round, 3" diameter

Get quote
Angic Global Solutions 1-888-872-0690
https://www.AngicGlobal.com Sales@AngicGlobal.com

Lifting Device Safety information

TE-CO Hoist Rings are solely intended for use by trained, qualified, and experienced users. Misuse of any TE-CO Hoist Ring or lack of supervision and inspection can lead to serious accidents, and possibly death. TE-CO has always stressed that safety is of the utmost importance.

Prior to any use of TE-CO Hoist Rings, evaluation of the product application, safety precautions, safe working load, and control of all field conditions is mandatory. Prevent applications that exceed the safe working load or any other product misuse. TE-CO cautions you that all safety factors shown are approximate. **Safe working loads should never be exceeded under any circumstances.**

If you have questions about the proper use or installation of any TE-CO Hoist Ring, please contact our office directly: **109 Quinter Farm Road, Union, OH 45322 • (800) 543-4071 • www.te-co.com**

Safety Notes

TE-CO ensures that the materials used on all our Hoist Ring products meet or exceed the safety requirements for lifting. The safe working loads listed are based upon a new or "as new" condition product. A safe working load is considered to be the greatest load that should be applied to an item at any time.

Inspection and Maintenance

In order to insure the safest lifting, and all for safety purposes, TE-CO Hoist Rings must be properly used and maintained. Hoist rings are subject to wear, corrosion, deformation, overloading, and other limiting factors, which may affect the safe working load. Prior to use, any TE-CO Hoist Ring product should be regularly inspected to determine if it may be used, or whether it should removed from service. It is the responsibility of the user to inspect all lifting units for signs of wear, and to discard any parts that show visible signs of wear. Every user should establish a routine safety inspection program for visual inspection of all products to determine whether signs of wear (e.g. cracks, corrosion, deformation) are present. The product inspection schedule should be established based upon factors such as frequency of use, period of use, and environment.

In addition to regular safety inspection, the following safety directives must be followed:

- Prior to use, always inspect hoist rings for possible wear or damage.
- Never use hoist rings that show any sign of wear or damage.
- Never use hoist rings if bail is bent or elongated.
- Prior to use, threads must be clean, undamaged, and must fit properly.
- Always install hoist rings using the listed torque value. Periodically check torque, because screws could loosen during extended service.
- Bent bolts should be discarded or replaced – never straightened. Failure to do so may lead to serious injury or death.
- Never use washers or spacers between bushing and mounting surface.
- Always make sure the hoist ring pivots and rotates freely in all directions.
- Never use hoist rings near or around corrosive material.
- If hoist ring is exposed to extreme hot or cold temperatures, please contact our engineering department for suggestions or consultation.
- Again: **safe working loads should never be exceeded under any circumstances.**

ANGIC Get quote 332-1274 • ww Angic Global Solutions 1-888-872-0690 https://www.AngicGlobal.com Sales@AngicGlobal.com

SAFETY FIRST!

ALWAYS READ SAFETY PRECAUTION PAGE PRIOR TO USE OR INSTALLATION

ALWAYS INSPECT THE HOIST RING BEFORE EACH USE

NEVER EXCEED RATED LOAD

NEVER APPLY SHOCK LOAD

Safe working loads should never be exceeded under any circumstances!

Get quote
2-1274 • ww
Angic Global Solutions 1-888-872-0690
https://www.AngicGlobal.com Sales@AngicGlobal.com

TOOLEX VISE WORKHOLDING SYSTEMS

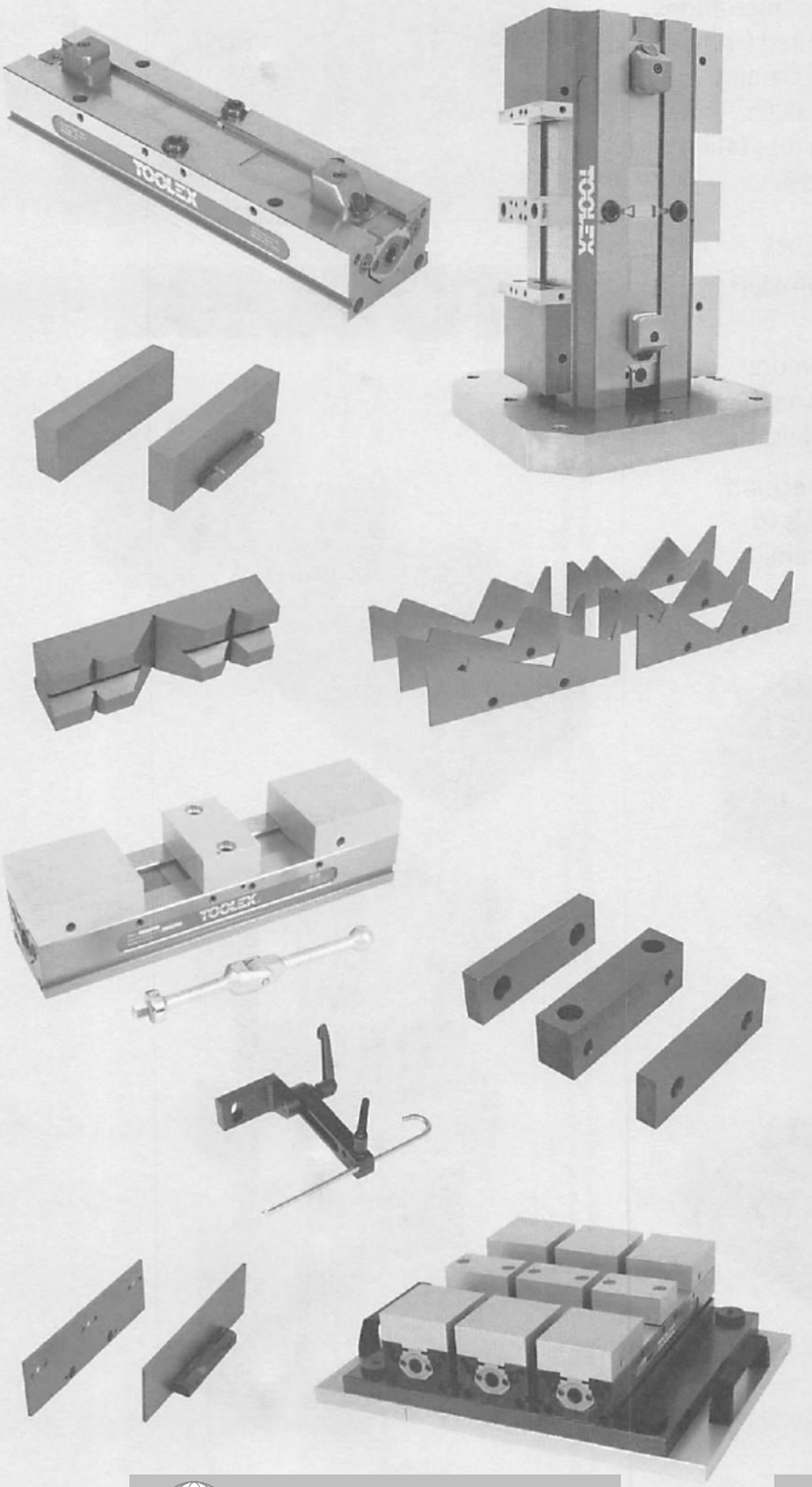

ReLock Vise System
Introduction....142
Features & Benefits.... 143-145
2-Station Vise....146
2-Station Vise Conversion Plate....147
ReLock Vise Capacities....147
Compact Vise....148
8-Station Vise/Accessories.... 149-150
8-Station Compact Quad....151
ReLock Starter Packages....152

SnapLock Jaws & Plates.... 153-156

AccuSnap Vise Jaw System ... 157-160
AccuSnap Starter Packages....161
AccuSnap Accessories.... 162-163

QuickChange Jaws & Parallels.... 164-168
QuickChange Starter Packages....168

Vise Accessories 169-171

Mounting Kit....171

QuickStop....171

8-Station Baseplate Mounting Information 172-174

ReLock Vise Parts Lists.... 175-178

AccuSnap Parts List....179

QuickChange Parts List....180

4" Single Station Vise....181

6" Single Station Vise....182

8" Single Station Vise....183

Get quote

Angic Global Solutions 1-888-872-0690
https://www.AngicGlobal.com Sales@AngicGlobal.com

ReLock® Modular Workholding System

The ReLock Vise System combines high manufactured tolerances with unequalled versatility in providing two-station and eight-station production vises. ReLock CNC vises, available with machinable soft jaws, hard jaws, master jaws and parallels, or fixture plates, allow the machinist a variety of configurations with the same vise. Bodies are manufactured from 80,000 PSI ductile cast iron, and ways are flame hardened and ground to accuracies of +/- .0005. Manual and hydraulic two-station and eight-station vises are available in widths of 4", 6" and 8.

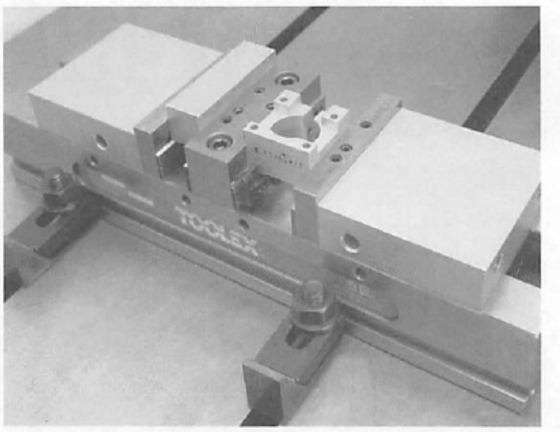

- Reduce setup times: The system's SnapLock feature allows you to change or index jaws in a matter of seconds.
- Extremely versatile: Offers the most comprehensive array of jaws and accessories available for vertical or horizontal machining applications.
- Accurate and durable: Designed and precision manufactured from high grade materials to meet today's extreme accuracy and durability requirements.

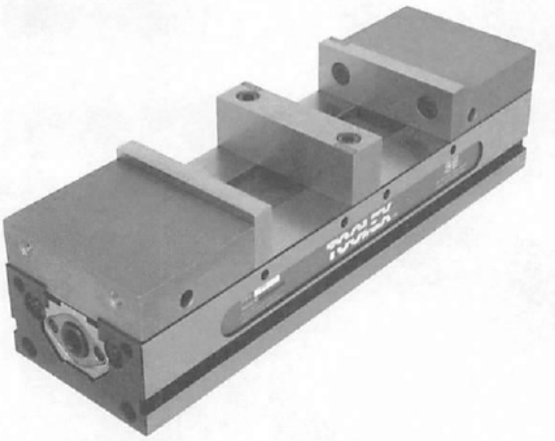

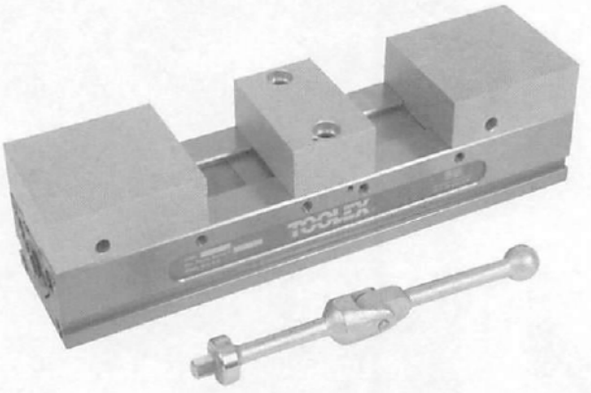

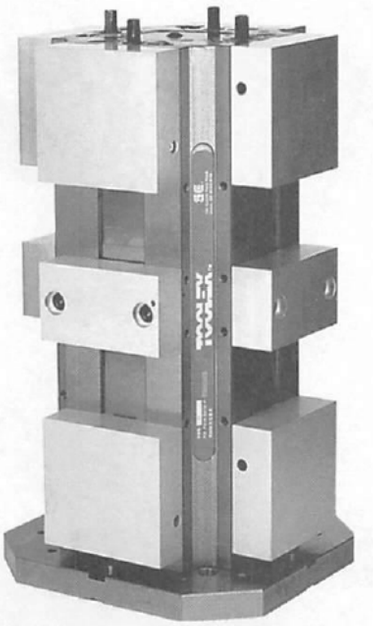

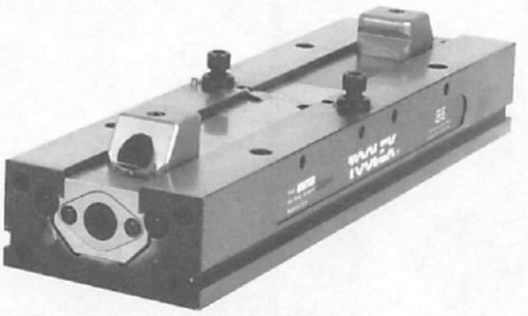

Get quote
Angic Global Solutions 1-888-872-0690
https://www.AngicGlobal.com Sales@AngicGlobal.com

Features and Benefits

Optimized Table Space

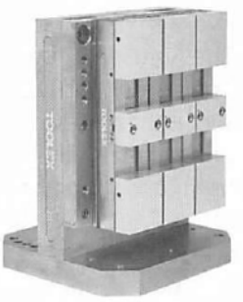

Compact modular design allows a multitude of mounting configurations. Vises can be mounted close together without hindering removal or attachment of jaws. The ReLock 8-station (shown) is ideal for horizontal machining centers, as well as with rotary indexers on vertical machining centers. The unibody design makes it lightweight, compact and extremely rigid.

New Brake Design

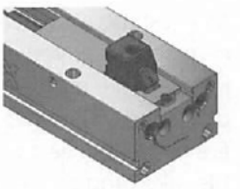

This new design is for the 4" and 6" vises only. The brake has only one setting (1/4"). The rear jaw will open 1/4" before the front jaw does. This offset can be adjusted, call us for details.

Locating and Mounting

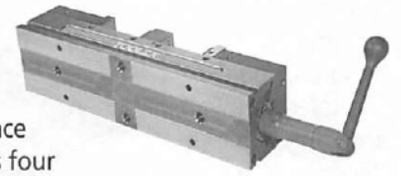

Locating and mounting options are simple and accurate. The bottom surface of the system has four precision dowel pin holes for locating and four drilled and counter bored holes drilled through from the top surface for rugged mounting. Side toe clamp slots are also incorporated for mounting. See page 172 for mounting and locating information for 8-station vises.

Auto Offset Mechanism

Still Available! Ask Your Sales Rep

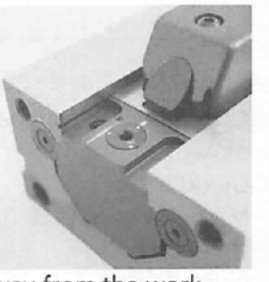

Exclusive automatic offset mechanism allows non-simultaneous work piece clamping and unclamping to one of three optional offset settings: 4" and 6": .030", .125", or .250"; 8": .125", .250", or .375." The offset setting is the distance the rear jaw backs away from the work piece before the front jaw begins to back away from the work piece.

ReLock Chip Shields

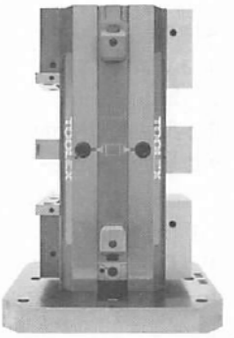

ReLock's unique three-piece telescoping chip shield wraps completely around the SnapLock knuckles, keeping chips from getting into the vise's clamping mechanism. Shields can be quickly and easily removed for maintenance purposes.

Center Jaw Location



The ReLock's center jaw locating studs allow quick jaw mounting and indexing to accuracies of +.0005." Fool-proof pin eliminates the possibility of the jaws being accidentally mounted in reverse.

Single Station Conversion Plate

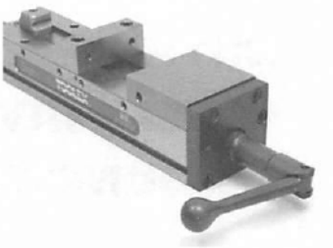

Used in conjunction with SnapLock carrier jaws, the conversion plate allows the ReLock system to be converted from a double to a single station vise – ideal for larger work pieces.
See page 147 for the 2-station version.
For 8-station version, see page 150.

ANGIC GLOBAL SOLUTIONS Get quote
32-1274 • ww
Angic Global Solutions 1-888-872-0690
https://www.AngicGlobal.com Sales@AngicGlobal.com

ReLock Vise System Accessories

Snaplock Machinable Fixture Jaws

Jaws can be attached, reversed, removed or indexed in a matter of seconds. The jaws are extremely versatile, allowing endless customization possibilities. Jaws are manufactured from steel and high quality aluminum material. See pages 154-155.

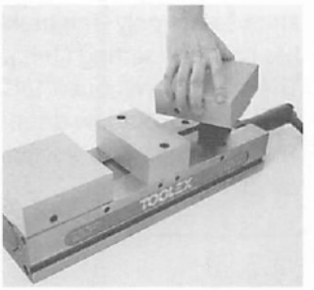

AccuSnap Vise Jaw System

The AccuSnap Vise Jaw system (pictured) shows master jaws and parallels being used for workpiece setup. The AccuSnap system allows setup change-over in seconds with extreme accuracy. See pages 157-162 for the complete product line.

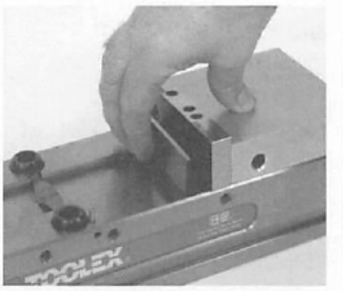

SnapLock Carrier Jaws

Carrier jaws allow mounting of AccuSnap and QuickChange Master Jaws or standard bolt on jaws using an industry standard bolt pattern. See page 156.

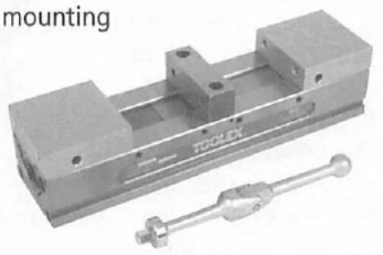

AccuSnap Machinable Fixture Jaws

Ideal for many workholding options of smaller workpieces. Jaws are offered in two thicknesses, from either aluminum or pre-hardened steel. See page 160.

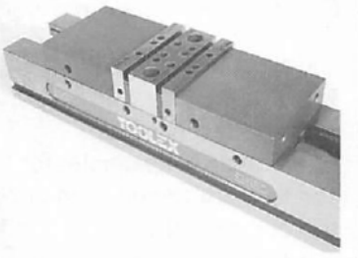

QuickChange Vise Jaw System

The QuickChange Vise Jaw System slides into position via a dovetail slot, as shown. The system includes master jaws, parallels, V-blocks, mill angles and machinable soft jaws. Adaptable to most vise systems. The QuickChange product line is located on pages 164-167.

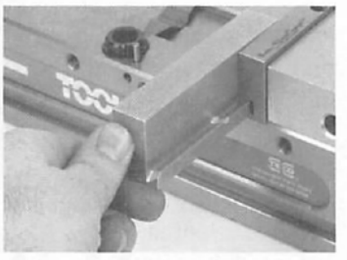

AccuSnap Workstops

Easily mount to AccuSnap parallels in a variety of configurations. Provides extreme work piece location accuracy and repeatability. See page 162.

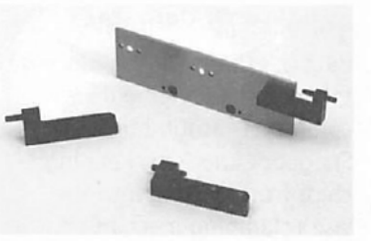

BOTH THE ACCUSNAP AND QUICKCHANGE VISE JAW SYSTEMS CAN BE USED IN CONJUNCTION WITH MOST VISE SYSTEMS

ANGIC GLOBAL SOLUTIONS
Get quote
2-1274 • ww
Angic Global Solutions 1-888-872-0690
https://www.AngicGlobal.com Sales@AngicGlobal.com

ReLock Vise System Overview

ACCUSNAP/QUICKCHANGE PARALLELS

AccuSnap and QuickChange Parallels are designed for a multitude of setup variations when you need to position a workpiece between hardened jaws. AccuSnap parallels snap in and out of the AccuSnap Master Jaws in seconds. QuickChange parallels slide into position via a dovetail slot & gib.

ACCUSNAP/QUICKCHANGE MACHINABLE FIXTURE JAWS

AccuSnap and QuickChange Machinable Fixture Jaws can be customized quickly to fixture a wide array of workpieces. The jaws snap or slide in and out of the master jaws in seconds. Available in either aluminum or pre-hardened steel.

SNAPLOCK CARRIER JAWS

SnapLock Carrier Jaws allow mounting of AccuSnap and QuickChange Master Jaws by using an industry standard bolt size and pattern. Carrier jaws snap on or off the SnapLock knuckles in seconds.

SINGLE STATION CONVERSION PLATE

The Single Station Conversion Plate quickly converts the ReLock from double station to single station vise for larger workpieces.

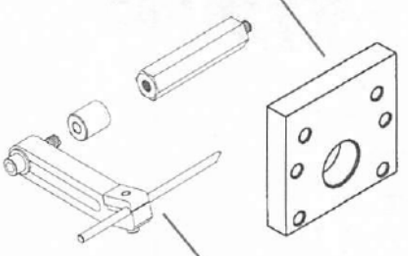

UNIVERSAL WORKSTOP

The Universal Workstop easily mounts to the side of the ReLock in numerous positions. Optional extension is available for larger workpieces.

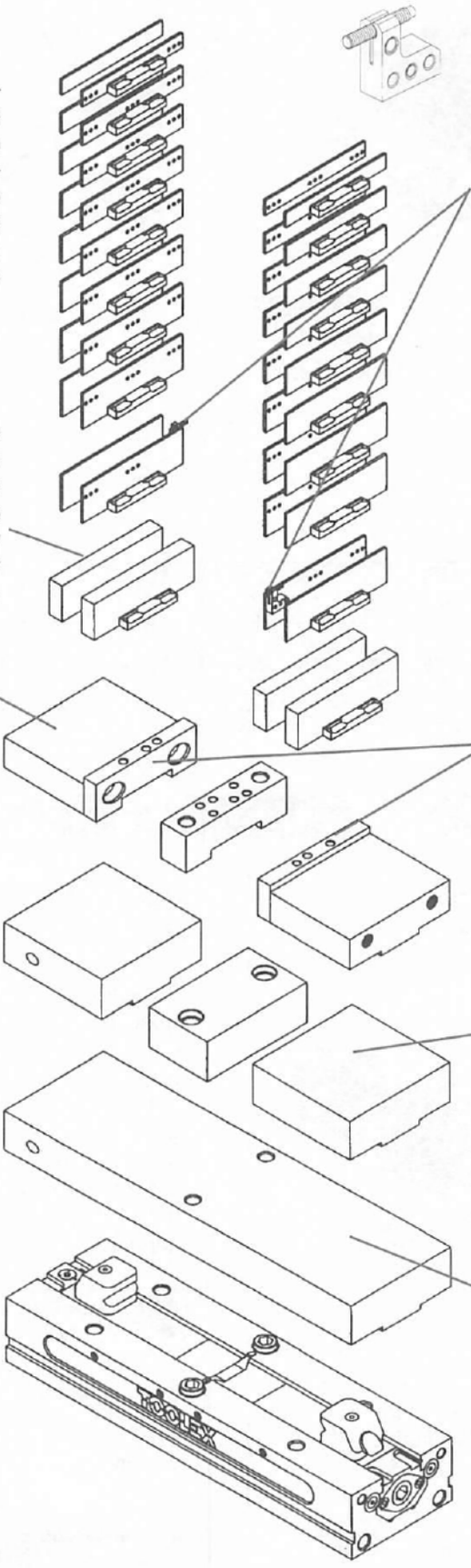

ACCUSNAP MODULAR WORKSTOPS

AccuSnap Modular Workstops quickly mount to parallels in many different positions. As many as three stops can be mounted to a single parallel to accommodate multi-piece setups.

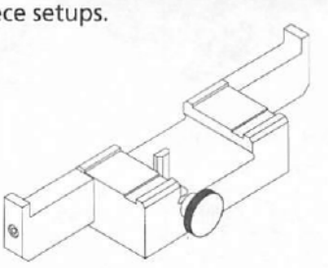

ACCUSNAP WORKSTOP PRESETTING GAUGE

The AccuSnap Workstop Presetting Gauge, in combination with a standard micrometer, allows you to precisely preset your modular workstop positions in relation to the X, Y, and Z machine datums.

ACCUSNAP/QUICKCHANGE MASTER JAWS

AccuSnap and QuickChange Master Jaws easily mount to the SnapLock Carrier Jaws by using an industry standard bolt size and pattern. AccuSnap master jaws patented locking receptacle accepts all AccuSnap accessories in seconds.

SNAPLOCK REVERSIBLE MACHINABLE FIXTURE JAWS

SnapLock Machinable Fixture Jaws are the most versatile method of fixturing on the ReLock System. Customizing options are endless. Jaws can be machined on two faces for additional set-up. Manufactured from high quality aluminum.

SNAPLOCK FIXTURE PLATE

Ideal for a wide variety of fixturing applications, such as holding many small parts or parts with difficult clamping or locating requirements. Fixture Plates can be attached or removed in seconds and are offered in two widths. Manufactured from high quality aluminum.

ANGIC GLOBAL SOLUTIONS Get quote
32-1274 • ww Angic Global Solutions 1-888-872-0690
https://www.AngicGlobal.com Sales@AngicGlobal.com

ReLock Double Station Vise

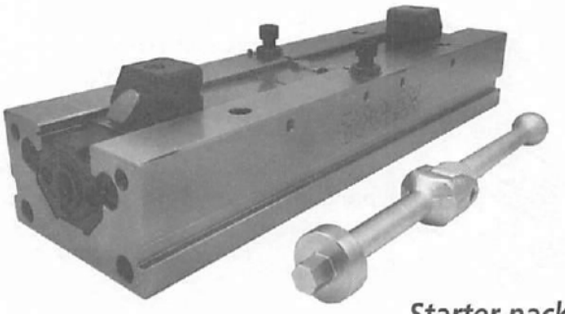

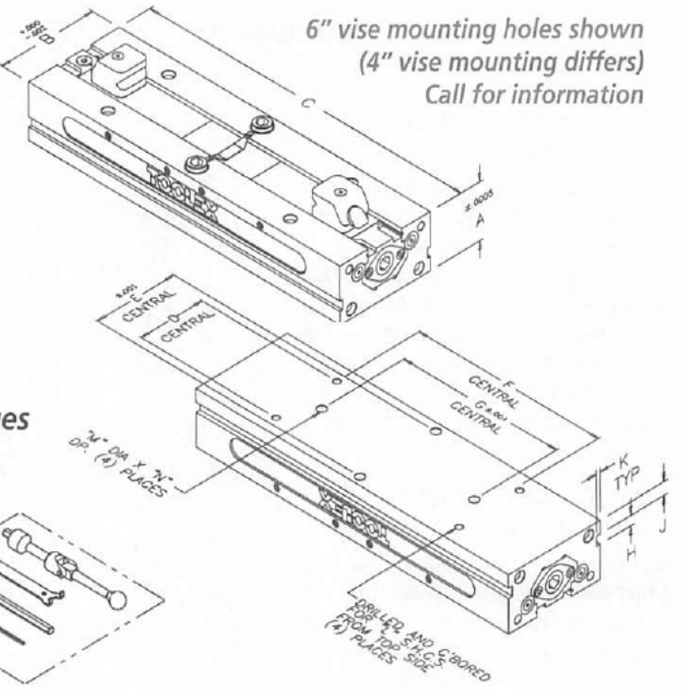

6" vise mounting holes shown
(4" vise mounting differs)
Call for information

Starter packages available on page 152.

Specifications

Vise Size	Net Weight	Clamping Pressure
RWS40S2	25.8 lbs.	0 to 6,000 lbs.
RWS4002	33 lbs.	0 to 6,000 lbs.
RWS60S2	59 lbs.	0 to 12,000 lbs.
RWS6002	68 lbs.	0 to 12,000 lbs.
RWS8002	110 lbs.	0 to 16,000 lbs.

Vise Size	Part Number	A	B	C	D	E	F	G	H	J	K	L	M	N
4"	RWS40S2	2.500	4.000	12.000	3.000	3.000	9.000	10.000	.375	.500	.190	5/16-18	.501	.560
4"	RWS4002	2.500	4.000	16.000	3.000	3.000	9.000	10.000	.375	.500	.190	5/16-18	.501	.560
6"	RWS60S2	3.250	6.000	18.000	4.000	5.000	12.000	10.000	.562	.750	.250	3/8-16	.501	.630
6"	RWS6002	3.250	6.000	20.500	4.000	5.000	12.000	10.000	.562	.750	.250	3/8-16	.501	.630
8"	RWS8002	4.000	8.000	28.500	6.000	6.000	16.000	14.000	.625	.750	.312	1/2-13	.751	.900

Replacement parts available on pages 175-176.

Jaws not included

Bodies manufactured from 80,000 PSI ductile cast iron • Ways flame hardened to 40 R/C maximum

ReLock Double Station Vise with Machinable Soft Jaws

- Vise specifications and jaw capacities shown on above and on page 147.
- Includes handle and tool kit (pry wrench and hex wrenches).
- See page 154 for SnapLock machinable fixture jaw specifications.

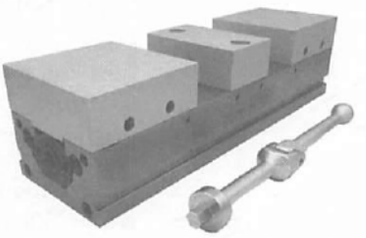

Vise Size	Package Number	Package Contents
4"	RWS4002SJ	1-RWS4002 1-SSJ4000
6"	RWS6002SJ	1-RWS6002 1-SSJ6000
8"	RWS8002SJ	1-RWS8002 1-SSJ8000

Package includes Double Station Vise and 3-piece Machinable Soft Jaw Set

ReLock Double Station Vise with Hard Jaws

- Vise specifications and jaw capacities shown above and on page 147.
- Includes handle and tool kit (pry wrench and hex wrenches).

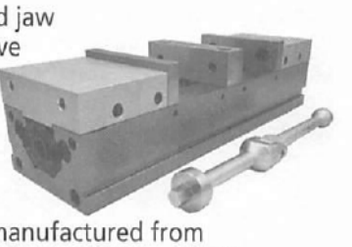

- Outside carrier jaws manufactured from high quality aluminum material (page 156).
- Standard hard jaw specifications are on page 169.

Vise Size	Package Number	Package Contents
4"	RWS4002HJ	1-RWS4002 1-SCJ4000 1-SHJ4035
6"	RWS6002HJ	1-RWS6002 1-SCJ6000 1-SHJ6035
8"	RWS8002HJ	1-RWS8002 1-SCJ8000 1-SHJ8035

Package includes Double Station Vise, two Carrier Jaws and 3-piece Standard Hard Jaw Set

ANGIC GLOBAL SOLUTIONS Get quote
Angic Global Solutions 1-888-872-0690
https://www.AngicGlobal.com Sales@AngicGlobal.com

Single Station Conversion Plate for ReLock 2-Station Vise

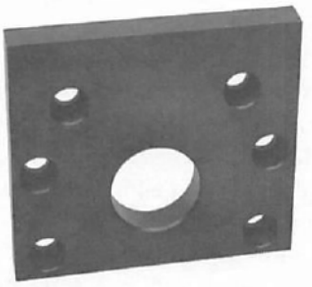

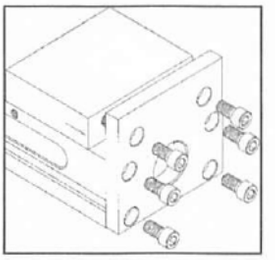

- The single station conversion plate, used in conjunction with SnapLock carrier jaw, allows the system to be converted from a double to a single station.
- Capacities and configuration examples are illustrated at left.

Converts a double station vise to a single station!

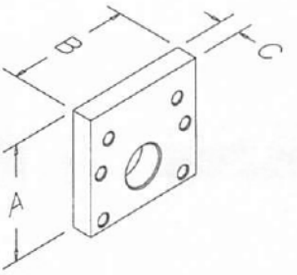

Vise Size	Part Number	A	B	C
4"	RCP4002	4.163	4.000	.720
6"	RCP6002	5.538	6.000	.720
8"	RCP8002	7.093	8.000	.970

ReLock 2 and 8-Station Capacities

The compact design of the Toolex vise allows you to mount the vises very closely to each other without interference. The SnapLock line of jaws allows you to literally "snap" jaws and accessories on and off the vise without the use of bolts or pins.

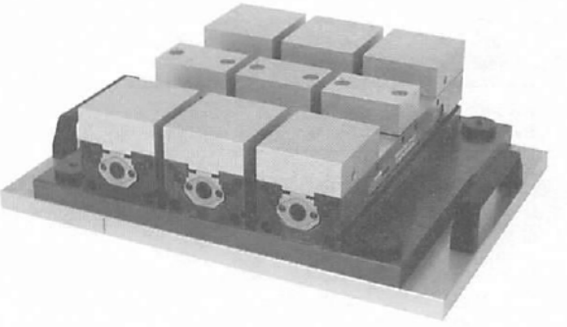

RELOCK 2 & 8 STATION CAPACITIES							
MACHINABLE JAWS	4"	6"	8"	CARRIER & HARD JAWS	4"	6"	8"
	4.125	5.125	7.625		3.000	4.000	6.000
	6.875	9.060	12.812	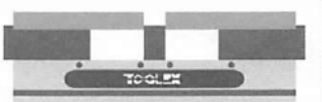	7.375	9.500	13.250
	9.500	11.625	17.125	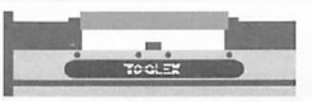	7.250	9.500	14.000
	12.250	15.562	22.312	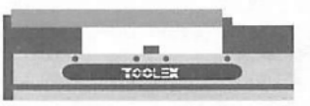	11.625	15.000	21.250
	15.000	19.500	27.500		16.000	20.500	28.500

ANGIC GLOBAL SOLUTIONS Get quote
32-1274 • ww Angic Global Solutions 1-888-872-0690
https://www.AngicGlobal.com Sales@AngicGlobal.com

Compact Vise with Machinable Jaws

for 5-axis machining applications and machining centers with a smaller work envelope



- Manufactured from 4140 hardened steel
- Machinable jaws allow maximum part contact – ensuring a rigid, accurate workholding fixture.
- Accepts Toolex® SnapLock Jaws for maximum flexibility, reduced set-up time.
- Clamping Pressures: 4" up to 6,000 lbs.; 6" up to 12,000 lbs.
- Solid end construction eliminates jaw lift on fixed jaw end.
- Vise repeatability = +/-.0005
- Jaws available in aluminum & 4140 Steel

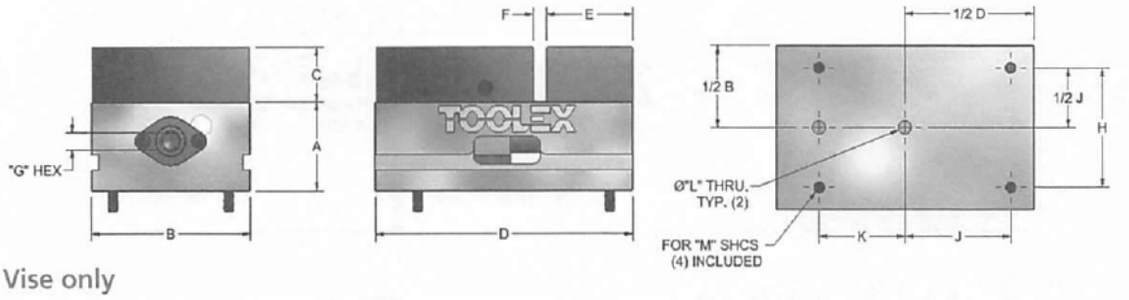

Vise only

Vise Size	Part Number	A	B	C	D	E	F	G	H	J	K	L	M
4"	RWS405X	2.500	4.000	–	6.650	–	–	0.500	2.875	2.625	2.000	0.501	.312-18
6"	RWS605X	3.250	6.000	–	9.750	–	–	0.625	4.375	4.000	3.250	0.501	.375-16

Vise with Steel Machinable Jaws

Vise Size	Part Number	A	B	C	D	E	F	G	H	J	K	L	M	Jaw Set No.
4"	RWS405XST	2.500	4.000	1.500	6.650	1.875	0.350	0.500	2.875	2.625	2.000	0.501	.312-18	SSJ415X
6"	RWS605XST	3.250	6.000	2.000	9.750	3.250	0.500	0.625	4.375	4.000	3.250	0.501	.375-16	SSJ615X

Vise with Aluminum Machinable Jaws

Vise Size	Part Number	A	B	C	D	E	F	G	H	J	K	L	M	Jaw Set No.
4"	RWS405XAL	2.500	4.000	1.500	6.650	1.875	0.350	0.500	2.875	2.625	2.000	0.501	.312-18	SSJ405X
6"	RWS605XAL	3.250	6.000	2.000	9.750	3.250	0.500	0.625	4.375	4.000	3.250	0.501	.375-16	SSJ605X

Jaw Sets

Vise Size	Part Description	Part Number Aluminum	Part Number Steel	A	B	C	D	E	F	G
4"	2-piece Set	SSJ405X	SSJ415X	4.250	3.94	1.500	1.875	2.250	2.060	1.060
	Movable Jaw	SSJ4200	SSJ4024	4.250	3.94	1.500	–	2.250	2.060	1.060
	Fixed Jaw	SSJ4027	SSJ4025	–	3.94	1.500	1.875	–	–	–
6"	2-piece Set	SSJ605X	SSJ615X	5.812	5.94	2.000	3.250	3.063	2.810	1.280
	Movable Jaw	SSJ6200	SSJ6024	5.812	5.94	2.000	–	3.063	2.810	1.280
	Fixed Jaw	SSJ6027	SSJ6025	–	5.94	2.000	3.250	–	–	–

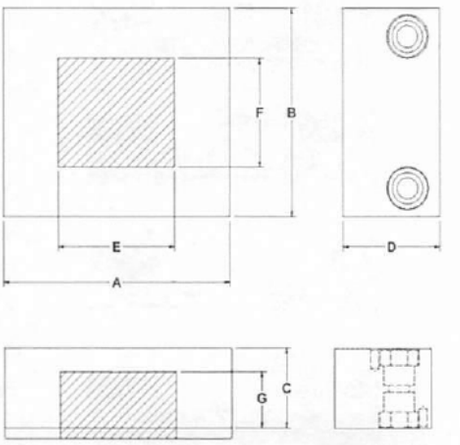

ANGIC GLOBAL SOLUTIONS
Get quote
Angic Global Solutions 1-888-872-0690
https://www.AngicGlobal.com Sales@AngicGlobal.com

ReLock 8-Station Vise

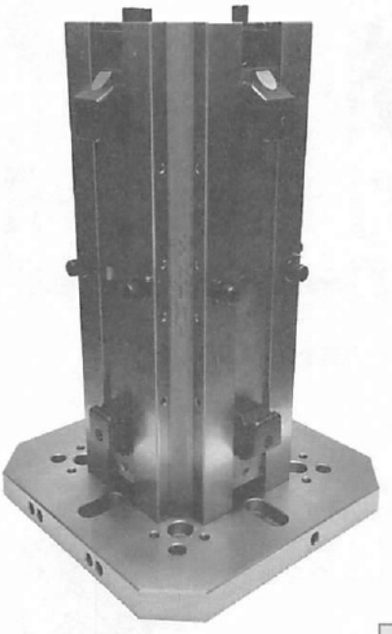

- Vise capacities shown on page 147.
- Baseplates are designed to adapt to many machine table sizes. See page 172-174 for specs.
- Vise columns can be located on a pallet using edge locating with shims or spacers (not included).

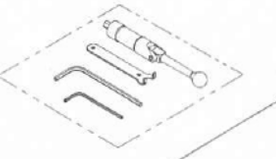

Starter packages available on page 152.

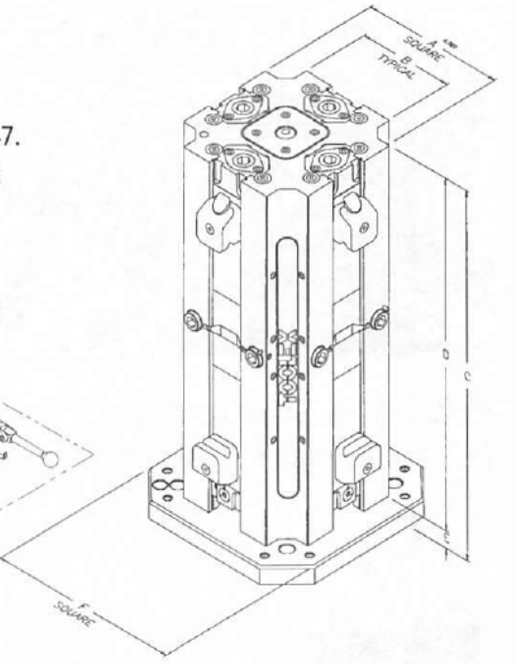

Specifications

Vise Size	Net Weight	Clamping Pressure
4"	150 lbs.	0 to 6,000 lbs.
6"	280 lbs.	0 to 12,000 lbs.
8"	750 lbs.	0 to 16,000 lbs.

Vise Size	Part Number	A	B	C	D	E	F
4"	RWS4008	7.000	4.000	17.90	16.750	1.150	10.750
4"	RWS4408	7.000	4.000	17.90	16.750	1.150	400mm
6"	RWS6008	9.000	6.000	22.65	21.250	1.400	14.000
6"	RWS6408	9.000	6.000	22.65	21.250	1.400	400mm
6"	RWS6058	9.000	6.000	22.65	21.250	1.400	500mm
8"	RWS8008	12.000	8.000	31.10	29.500	1.600	18.000

Replacement parts available on pages 175-178

Bodies manufactured from 80,000 PSI ductile cast iron • Ways flame hardened to 40 R/C maximum

ReLock 8-Station Vise with Machinable Soft Jaws

- Includes handle and tool kit (pry wrench and hex wrenches).
- See page 154-155 for SnapLock machinable fixture jaw specifications.

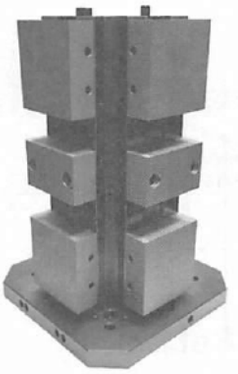

Vise Size	Package Number	Package Contents
4"	RWS4008SJ*	1-RWS4008 4-SSJ4000
6"	RWS6008SJ**	1-RWS6008 4-SSJ6000
8"	RWS8008SJ	1-RWS8008 4-SSJ8000

Package includes 8-Station Vise and four 3-piece Machinable Soft Jaw Sets

* Use RWS4408SJ for 4" ReLock Vise with 400mm baseplate w/soft jaws
** Use RWS6408SJ for 6" ReLock Vise with 400mm baseplate w/soft jaws

ReLock 8-Station Vise with Hard Jaws

- Standard hard jaws specifications on page 147.
- Outside carrier jaws manufactured from high quality aluminum material (see page 156).

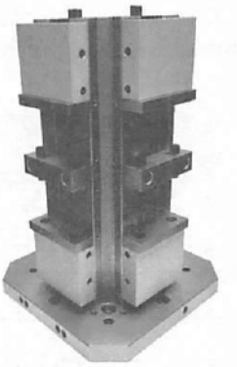

Vise Size	Package Number	Package Contents
4"	RWS4008HJ*	1-RWS4008 4-SCJ4000 4-SHJ4035
6"	RWS6008HJ**	1-RWS6008 4-SCJ6000 4-SHJ6035
8"	RWS8008HJ	1-RWS8008 4-SCJ8000 4-SHJ8035

Package includes 8-Station Vise, eight Carrier Jaws and four 3-piece Standard Hard Jaw Sets

* Use RWS4408HJ for ReLock Vise with 400mm baseplate w/hard jaws
** Use RWS6408HJ for ReLock Vise with 400mm baseplate w/hard jaws

ANGIC GLOBAL SOLUTIONS Get quote
Angic Global Solutions 1-888-872-0690
https://www.AngicGlobal.com Sales@AngicGlobal.com

RELOCK-8 STATION WORKHOLDING SYSTEM

The ReLock 8-Station's compact and lightweight unibody design is perfect for horizontal machining centers. The unibody is manufactured from 80,000 PSI Ductile Cast Iron and the ways are flamed hardened and precision ground to accuracies of ±.0005". It's also ideal for use with rotary indexers in vertical machining center applications.

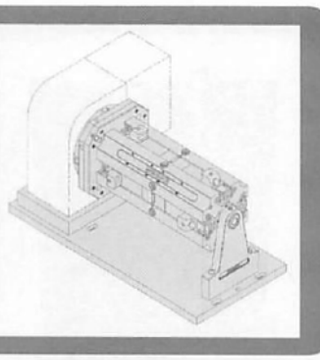

ReLock-8 Support Bracket Part Number RSB4000

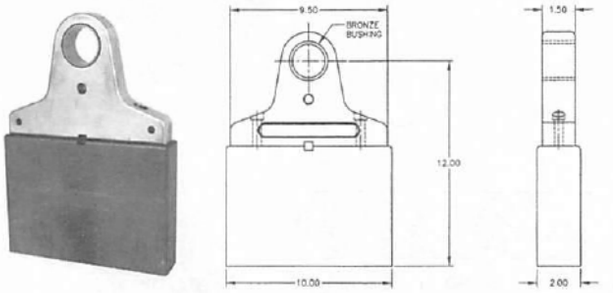

- Optional ReLock support bracket incorporates a bronze bushing and grease fitting for durability.
- Customer must modify base to required height.

ReLock-8 Adapter Plate

Optional adapter plate simplifies attachment of the ReLock-8 to either a pallet or an indexer. Unique alignment feature allows the vise to be oriented to indexing quickly and accurately.

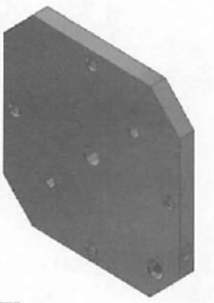

Vise Size	Part Number	A	B	C
4"	RAP4008	9.000	9.000	.750
6"	RAP6008	12.000	12.000	1.000

ReLock-8 Support/Alignment Nose

Optional support nose works in conjunction with the support bracket and adapter plate for long lasting precision to .001" T.I.R.



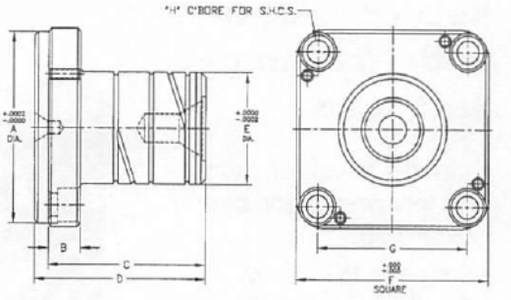

Vise Size	Part Number	A	B	C	D	E	F	G	H
4"	RSN4008	2.750	.469	2.750	3.000	1.9672	2.875	2.207	5/16-18
6"	RSN6008	3.375	.593	2.875	3.125	1.9672	3.500	2.726	3/8-16
8"	RSN8008	5.125	.718	3.000	3.250	1.9672	5.250	4.187	1/2-13

Single Station Conversion Plate for ReLock-8

- Allows each station to be converted from double to single station when used in conjunction with SnapLock carrier jaw.
- Capacities and configuration examples are illustrated on page 147.
- Not compatible with ReLock Compact Quad.
- See pg. 152 for mounting info.



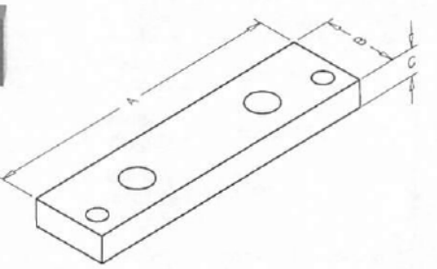

Vise Size	Part Number	A	B	C
4"	RCP4008	5.50	1.500	.720
6"	RCP6008	8.00	2.000	.720
8"	RCP8008	10.25	2.500	.970

ANGIC GLOBAL SOLUTIONS Get quote
Angic Global Solutions 1-888-872-0690
https://www.AngicGlobal.com Sales@AngicGlobal.com

ReLock 8-Station Compact Quad

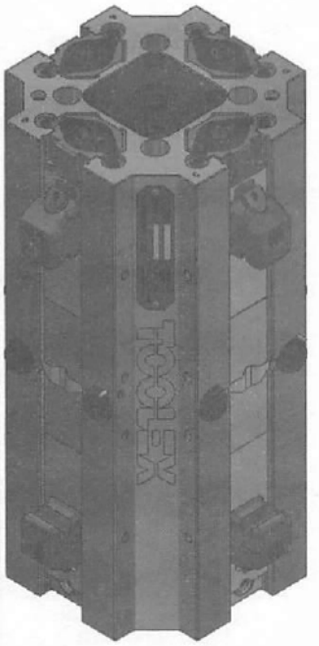

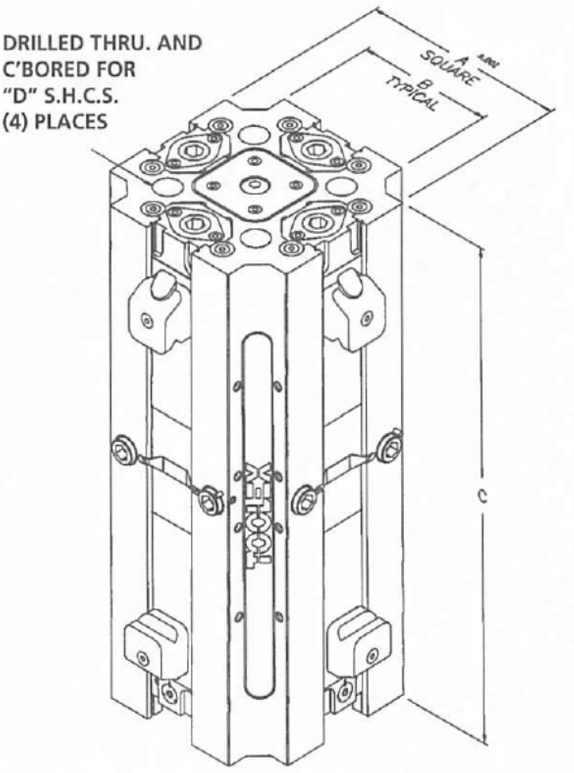

Call for print with mounting information

- Designed for machining center with small work envelopes like the Tsugami FMA3.
- Through column mounting holes are included to mount directly to the pallet of an HMC without the need for a baseplate.
- Clamping pressure = 0 to 6,000 lbs.
- Recommended foot lbs. = 45-50
- Mounting kit included.

Part Number	A	B	C	Package Contents
RWS40S8	7.000	4.000	13.90	1-RWS40S8 no jaws
RWS40S8SJ	7.000	4.000	13.90	1-RWS40S8 4-SSJ4000
RWS40S8HJ	7.000	4.000	13.90	1-RWS40S8 4-SCJ4000 4-SHJ4035

VISE CAPACITIES

MACHINABLE JAWS		CARRIER & HARD JAWS	
	2.700	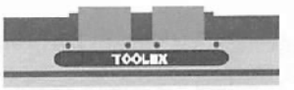	1.575
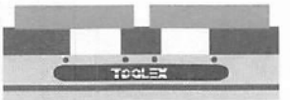	5.450	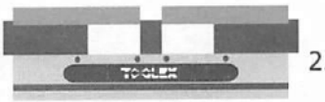	2.950
	6.650		4.400
	9.400		8.775
	12.150		13.150

Bodies manufactured from 80,000 PSI ductile cast iron • Ways flame hardened to 40 R/C maximum

ANGIC GLOBAL SOLUTIONS
Get quote
32-1274 • ww
Angic Global Solutions 1-888-872-0690
https://www.AngicGlobal.com Sales@AngicGlobal.com

Easy Mounting Instructions for the Single Station Conversion Plate on a ReLock 8-Station Vise

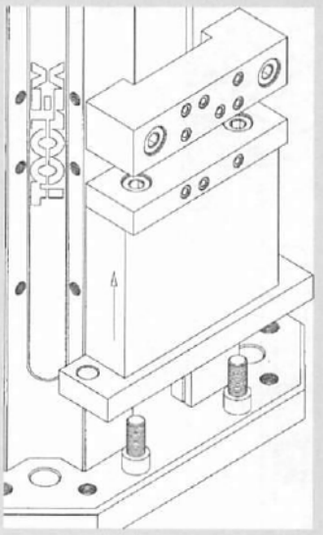

Step 1

Crank bottom jaw toward center of vise. Mount single station conversion plate to the back carrier jaw as shown.

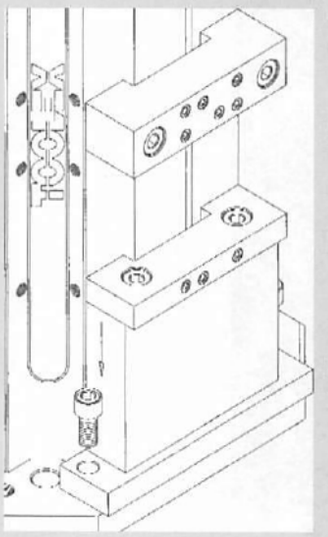

Step 2

Crank bottom jaw down until the single station conversion plate touches baseplate. Mount the single station conversion plate to the baseplate.

2-Station Vise Packages

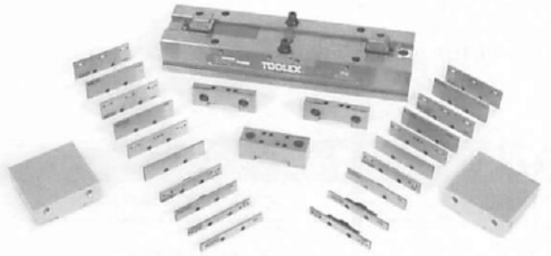

Package #RSP4002 includes:

Qty.	PART NUMBER	Part Description
1	RWS4002	4" ReLock 2-Station Vise
1	SCJ4000	SnapLock Carrier Jaw Set*
1	AMJ4035	AccuSnap Master Jaws (3 pc. set)
2	APS4000	AccuSnap Basic Parallel Set

*2 outside jaws per set

Package #RSP6002 includes:

Qty.	PART NUMBER	Part Description
1	RWS6002	6" ReLock 2-Station Vise
1	SCJ6000	SnapLock Carrier Jaw Set*
1	AMJ6035	AccuSnap Master Jaws (3 pc. set)
2	APS6000	AccuSnap Basic Parallel Set

*2 outside jaws per set

Package #RSP8002 includes:

Qty.	PART NUMBER	Part Description
1	RWS8002	8" ReLock 2-Station Vise
1	SCJ8000	SnapLock Carrier Jaw Set*
1	AMJ8035	AccuSnap Master Jaws (3 pc. set)
2	APS8000	AccuSnap Basic Parallel Set

*2 outside jaws per set

8-Station Vise Packages

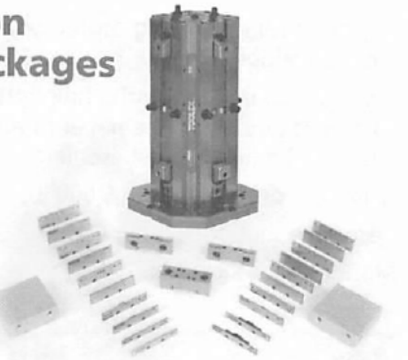

Package #RSP4008 includes:

Qty.	PART NUMBER	Part Description
1	RWS4008	4" ReLock 8-Station Vise
4	SCJ4000	SnapLock Carrier Jaw Set*
4	AMJ4035	AccuSnap Master Jaws (3 pc. set)
8	APS4000	AccuSnap Basic Parallel Set

*2 outside jaws per set

Package #RSP6008 includes:

Qty.	PART NUMBER	Part Description
1	RWS6008	6" ReLock 8-Station Vise
4	SCJ6000	SnapLock Carrier Jaw Set*
4	AMJ6035	AccuSnap Master Jaws (3 pc. set)
8	APS6000	AccuSnap Basic Parallel Set

*2 outside jaws per set

Package #RSP8008 includes:

Qty.	PART NUMBER	Part Description
1	RWS8008	8" ReLock 8-Station Vise
4	SCJ8000	SnapLock Carrier Jaw Set*
4	AMJ8035	AccuSnap Master Jaws (3 pc. set)
8	APS8000	AccuSnap Basic Parallel Set

*2 outside jaws per set

ANGIC GLOBAL SOLUTIONS
Get quote
Angic Global Solutions 1-888-872-0690
https://www.AngicGlobal.com Sales@AngicGlobal.com

SnapLock Machinable, Reversible Fixture Jaws

The SnapLock® system's patented design provides simple, quick changeovers between machinable and carrier jaws.

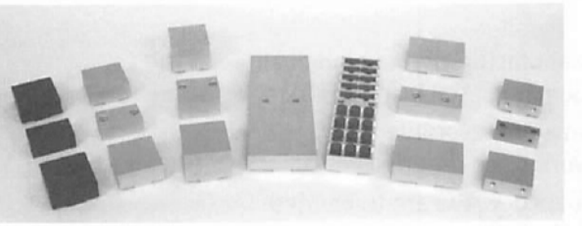

Snaplock Machinable Fixture Jaws:

- Can be attached, reversed, removed or indexed in a matter of seconds.
- Extremely versatile, allowing endless customization possibilities.
- Manufactured from high quality aluminum.
- SnapLock Carrier Jaws:
- Allows mounting of AccuSnap and Quick-Change master jaws or standard bolt-on jaws using an industry standard bolt size and pattern.

TOOLEX®

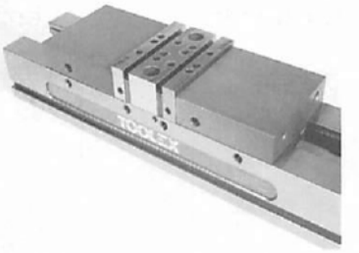

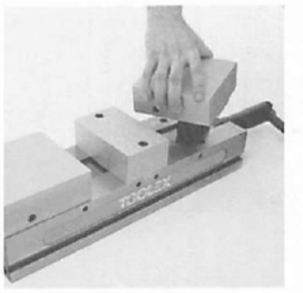

How to use the SnapLock Jaw System

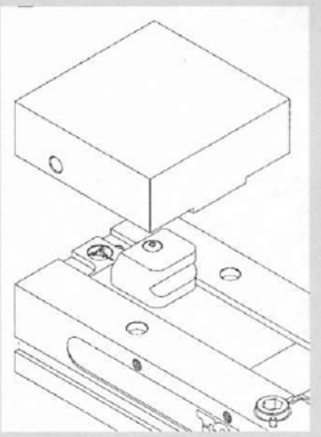

Step 1

To use the SnapLock Jaw System, simply align the jaw over the appropriate ReLock knuckle.

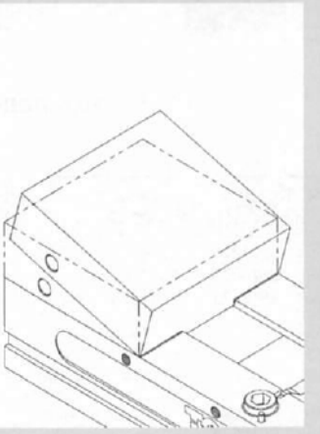

Step 2

Place the front edge of the jaw over the knuckle and press firmly down on the rear of the jaw to "snap" into place.

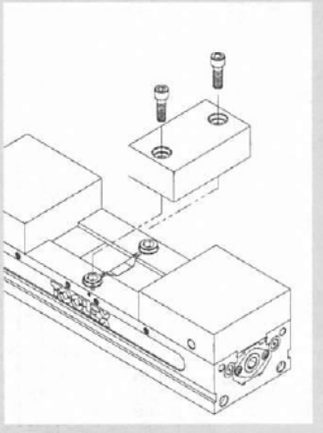

Step 3

Finally, align the center over corresponding mounting and locating holes and fasten down with socket head cap screws.

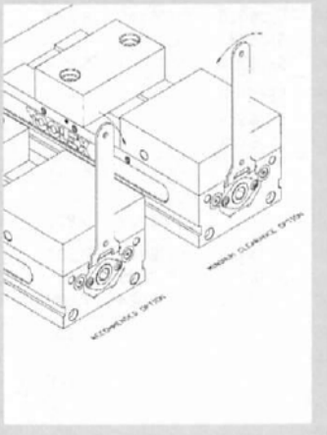

Step 4

For jaw removal, simply unbolt the center jaw and slip the provided pry wrench in slots of outside jaws as shown; pull back or sideways on the handle.

ANGIC GLOBAL SOLUTIONS
Get quote
Angic Global Solutions 1-888-872-0690
https://www.AngicGlobal.com Sales@AngicGlobal.com

SnapLock Machinable Fixture Jaws

- Manufactured from high quality aluminum, steel, and 4140 steel.
- Jaws are reversible for additional work piece set-up.
- SnapLock jaws are to be used with the ReLock system only.

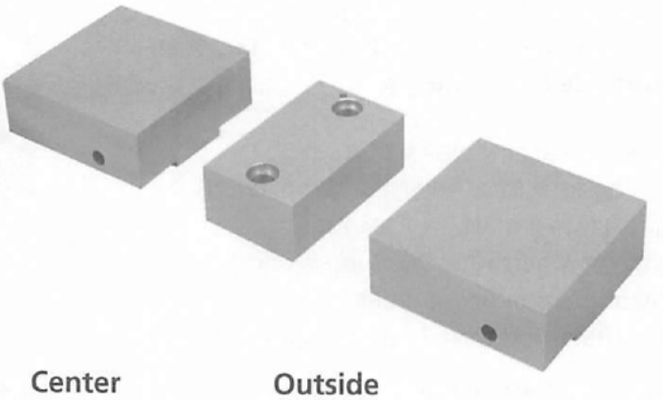

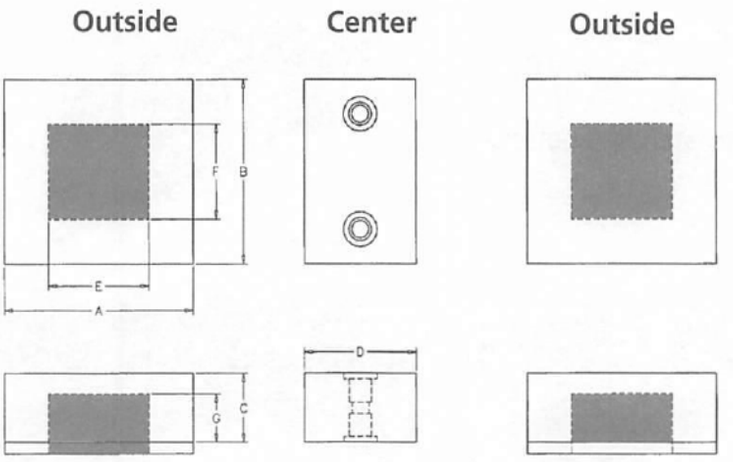

■ Denotes non-machinable areas

Vise Size	Part Desc.	PART NUMBER Aluminum	1018 Steel	4140 Steel	A	B	C	D	E	F	G	Style
4"	3 pc. Set	SSJ4000	SSJ4020	SSJ4140	4.250	3.94	1.500	2.500	2.250	2.060	1.060	
	1 Center	SSJ4100	SSJ4021	SSJ4023	---	3.94	1.500	2.500	---	---	---	Standard
	1 Outside	SSJ4200	SSJ4022	SSJ4024	4.250	3.94	1.500	---	2.250	2.060	1.060	
4"	3 pc. Set	SSJ4275	---	SSJ4420	4.250	3.94	2.75	2.500	2.250	2.060	1.060	
	1 Center	SSJ4075	---	SSJ4421	---	3.94	2.75	2.500	---	---	---	Tall
	1 Outside	SSJ4175	---	SSJ4422	4.250	3.94	2.75	---	2.250	2.060	1.060	
4"	3 pc. Set	SSJ4006	SSJ4620	---	4.250	5.94	1.500	2.500	---	---	---	
	1 Center	SSJ4016	SSJ4621	---	---	5.94	1.500	2.500	---	---	---	Wide
	1 Outside	SSJ4026	SSJ4622	---	4.250	5.94	1.500	---	2.250	2.060	1.060	
6"	3 pc. Set	SSJ6000	SSJ6020	SSJ6140	5.812	5.94	2.000	3.500	3.063	2.810	1.280	
	1 Center	SSJ6100	SSJ6021	SSJ6023	---	5.94	2.000	3.500	---	---	---	Standard
	1 Outside	SSJ6200	SSJ6022	SSJ6024	5.812	5.94	2.000	---	3.063	2.810	1.280	
6"	3 pc. Set	SSJ6325	SSJ6320	---	5.812	5.94	3.25	3.500	3.063	2.810	1.280	
	1 Center	SSJ6125	SSJ6321	---	---	5.94	3.25	3.500	---	---	---	Tall
	1 Outside	SSJ6225	SSJ6322	---	5.812	5.94	3.25	---	3.063	2.810	1.280	
6"	3 pc. Set	SSJ6008	---	SSJ6720	5.812	7.94	2.000	3.500	3.063	2.810	1.280	
	1 Center	SSJ6108	---	SSJ6721	---	7.94	2.000	3.500	---	---	---	Wide
	1 Outside	SSJ6208	---	SSJ6722	5.812	7.94	2.000	---	3.063	2.810	1.280	
8"	3 pc. Set	SSJ8000	SSJ8020	SSJ8140	7.500	7.94	2.500	4.500	3.125	2.625	1.500	
	1 Center	SSJ8100	SSJ8021	SSJ8023	---	7.94	2.500	4.500	---	---	---	Standard
	1 Outside	SSJ8200	SSJ8022	SSJ8024	7.500	7.94	2.500	---	3.125	2.625	1.500	
8"	3 pc. Set	SSJ8375	---	---	7.500	7.94	3.75	4.500	3.125	2.625	1.500	
	1 Center	SSJ8175	---	---	---	7.94	3.75	4.500	---	---	---	Tall
	1 Outside	SSJ8275	---	---	7.500	7.94	3.75	---	3.125	2.625	1.500	
8"	3 pc. Set	SSJ8010	---	---	7.500	9.94	2.50	4.500	3.125	2.625	1.500	
	1 Center	SSJ8110	---	---	---	9.94	2.50	4.500	---	---	---	Wide
	1 Outside	SSJ8210	---	---	7.500	9.94	2.50	---	3.125	2.625	1.500	

Get quote
Angic Global Solutions 1-888-872-0690
https://www.AngicGlobal.com Sales@AngicGlobal.com

SnapLock Machinable Fixture Jaws for Single Station Application

- Manufactured from high quality aluminum, steel and 4140 steel.
- Tapped holes allow user to convert the Relock® vise into a single station vise using the single station conversion plate on page 147.
- SnapLock Jaws are only used with the ReLock® System.

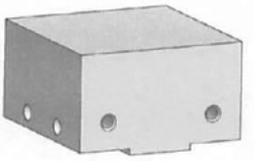

Outside

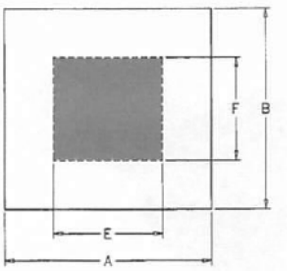

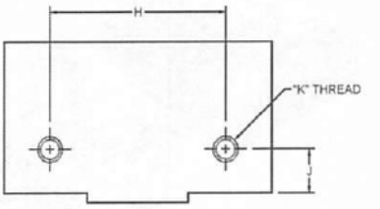

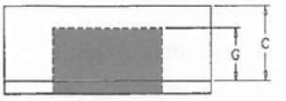

■ Denotes non-machinable areas

Vise Size	Aluminum	PART NUMBER 1018 Steel	4140 Steel	A	B	C	E	F	G	H	J	K	Style
4"	SSJ4200T	SSJ4022T	SSJ4024T	4.250	3.94	1.500	2.250	2.060	1.060	2.500	.687	3/8-16 x .63	Std.
4"	SSJ4175T	---	---	4.250	3.94	2.75	2.250	2.060	1.060	2.500	.687	3/8-16 x .63	Tall
6"	SSJ6200T	SSJ6022T	SSJ6024T	5.812	5.94	2.000	3.063	2.810	1.280	3.875	.937	1/2-13 x .75	Std.
6"	SSJ6225T	---	---	5.812	5.94	3.25	3.063	2.810	1.280	3.875	.937	1/2-13 x .75	Tall
8"	SSJ8200T	SSJ8022T	SSJ8024T	7.500	7.94	2.500	3.125	2.625	1.500	4.750	1.218	5/8-11 x 1.3	Std.
8"	SSJ8275T	---	---	7.500	7.94	3.75	3.125	2.625	1.500	4.750	1.218	5/8-11 x 1.3	Tall

SnapLock Full-Coverage Machinable Fixture Jaws

- Manufactured from high quality aluminum.
- Jaws are reversible for additional workpiece set-up.
- Jaws allow maximum part contact and part rigidity.
- SnapLock jaws are to be used with the ReLock system only.
- See page 154 for additional outside jaws to be used in conjuction with full coverage center jaws.

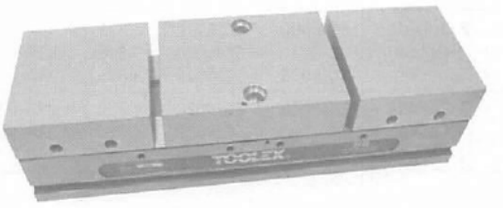

Please refer to drawing on page 154

Part No.	Part Desc.	A	B	C	D	E	F	G	Style	3-piece Sets Include:
SSJ4000FC	3 PC SET	4.250	3.94	1.500	6.500	2.250	2.060	1.060	Standard	2: SSJ4200 & 1: SSJ4100FC
SSJ4100FC	1 CENTER	4.250	3.94	1.500	6.500	2.250	2.060	1.060	Standard	–
SSJ4275FC	3 PC SET	4.250	3.94	2.750	6.500	2.250	2.060	1.060	Tall	2: SSJ4175 & 1: SSJ4075FC
SSJ4075FC	1 CENTER	4.250	3.94	2.750	6.500	2.250	2.060	1.060	Tall	–
SSJ4006FC	3 PC SET	4.250	5.94	1.500	6.500	2.250	2.060	1.060	Wide	2: SSJ4026 & 1: SSJ4016FC
SSJ4016FC	1 CENTER	4.250	5.94	1.500	6.500	2.250	2.060	1.060	Wide	–
SSJ6000FC	3 PC SET	5.812	5.94	2.000	7.875	3.063	2.810	1.280	Standard	2: SSJ6200 & 1: SSJ6100FC
SSJ6100FC	1 CENTER	5.812	5.94	2.000	7.875	3.063	2.810	1.280	Standard	–
SSJ6325FC	3 PC SET	5.812	5.94	3.250	7.875	3.063	2.810	1.280	Tall	2: SSJ6225 & 1: SSJ6125FC
SSJ6125FC	1 CENTER	5.812	5.94	3.250	7.875	3.063	2.810	1.280	Tall	–
SSJ6008FC	3 PC SET	5.812	7.94	2.000	7.875	3.063	2.810	1.280	Wide	2: SSJ6208 & 1:SSJ6108FC
SSJ6108FC	1 CENTER	5.812	7.94	2.000	7.875	3.063	2.810	1.280	Wide	–
SSJ8000FC	3 PC SET	7.500	7.94	2.500	11.500	3.125	2.625	1.500	Standard	2: SSJ8200 & 1: SSJ8100FC
SSJ8100FC	1 CENTER	7.500	7.94	2.500	11.500	3.125	2.625	1.500	Standard	–
SSJ8375FC	3 PC SET	7.500	7.94	3.750	11.500	3.125	2.625	1.500	Tall	2: SSJ8275 & 1: SSJ8175FC
SSJ8175FC	1 CENTER	7.500	7.94	3.750	11.500	3.125	2.625	1.500	Tall	–
SSJ8010FC	3 PC SET	7.500	9.94	2.500	11.500	3.125	2.625	1.500	Wide	2: SSJ8210 & 1: SSJ8110FC
SSJ8110FC	1 CENTER	7.500	9.94	2.500	11.500	3.125	2.625	1.500	Wide	–

ANGIC GLOBAL SOLUTIONS Get quote
32-1274 • ww
Angic Global Solutions 1-888-872-0690
https://www.AngicGlobal.com Sales@AngicGlobal.com

SnapLock Carrier Jaws

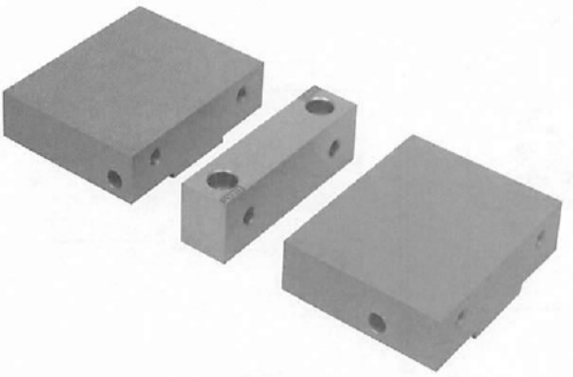

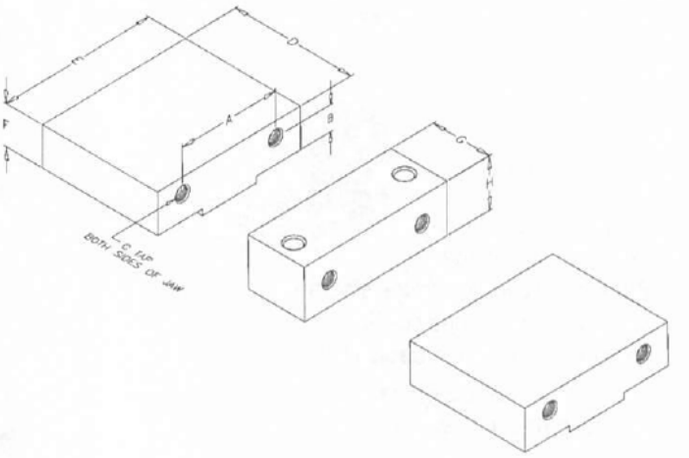

- Outside jaws manufactured from high quality aluminum material; center jaw manufactured from steel.
- Carrier jaws are to be used in conjunction with AccuSnap (page 158) and QuickChange master jaws (page 165).
- Outside jaws can be used in conjunction with single station conversion plates (pages 147 and 150).
- SnapLock Jaws are to be used with the ReLock system only.
- Two socket head cap screws included with each outside jaw.

Single Station Conversion Plates are available on pages 147 and 150.

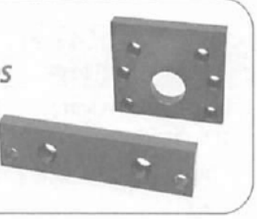

Vise Size	Part Description	Part Number Aluminum	Part Number Steel	A	B	C	D	E	F	G	H
4"	2 Outside	SCJ4000	SCJ4020	2.500	.687	3/8-16	3.812	3.94	1.12	–	–
	1 Center	–	SCJ4030	2.500	.687	3/8-16	–	3.94	1.12	1.250	1.350
	3 pc. Set	SCJ4035	SCJ4025	2.500	.687	3/8-16	3.812	3.94	1.12	1.250	1.350
6"	2 Outside	SCJ6000	SCJ6020	3.875	.937	1/2-13	4.750	5.94	1.52	–	–
	1 Center	–	SCJ6030	3.875	.937	1/2-13	–	5.94	–	1.500	1.850
	3 pc. Set	SCJ6035	SCJ6025	3.875	.937	1/2-13	4.750	5.94	1.52	1.500	1.850
8"	2 Outside	SCJ8000	SCJ8020	4.750	1.218	5/8-11	6.125	7.94	2.12	–	–
	1 Center	–	SCJ8030	4.750	1.218	5/8-11	–	7.94	–	1.980	2.35
	3 pc. Set	SCJ8035	SCJ8025	4.750	1.218	5/8-11	6.125	7.94	2.12	1.980	2.35

SnapLock Fixture Plates

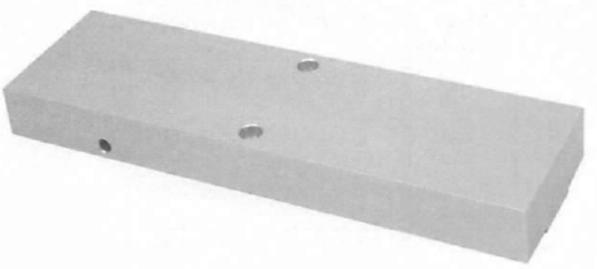

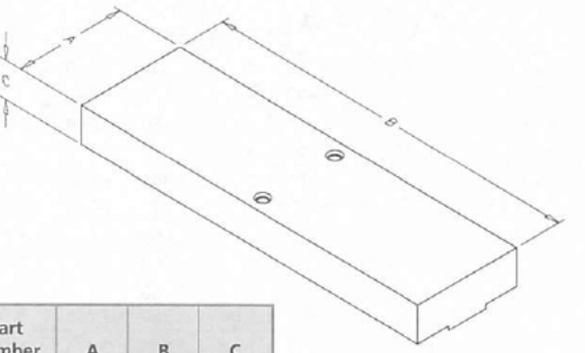

- Manufactured from high quality aluminum material.
- Ideal for holding many small parts or workpieces with difficult clamping or locating points.
- SnapLock plates are used only with the Relock system.

Vise Size	Part Number	A	B	C
4"	SFP4000 SFP4001	4.000 6.000	16.000	1.500
6"	SFP6000 SFP6001	6.000 8.000	20.500	2.000
8"	SFP8000 SFP8001	8.000 10.000	28.500	2.500

Get quote
Angic Global Solutions 1-888-872-0690
https://www.AngicGlobal.com Sales@AngicGlobal.com

AccuSnap Jaws and Parallels

- Fast, accurate and versatile
- Reduces setup time drastically
- ± .0002 repeatibilty
- Adaptable to most vise systems

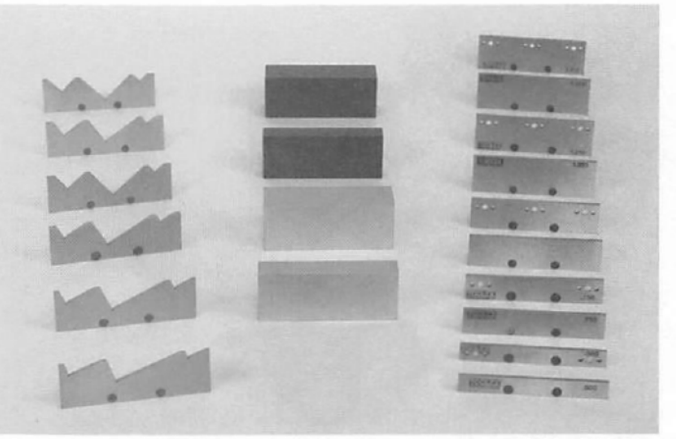

Before mounting AccuSnap master jaws, thoroughly inspect, clean and remove any burrs or chips from mounting surface.

TOOLEX®

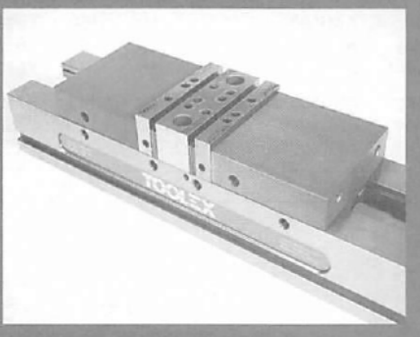

Simply attach the AccuSnap master jaws to the carrier jaw system using the industry standard bolt pattern.

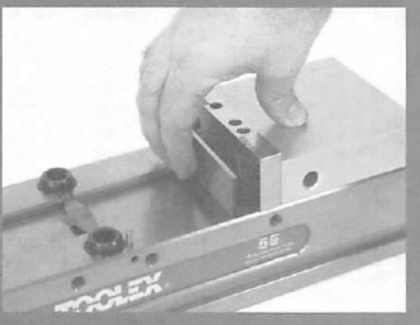

Snap in the parallels or soft jaws that you require for your setup and begin machining. Two lock screws are provided for extra holding assurance, but are not necessary to hold parallels in place. Do not overtighten lock screws.

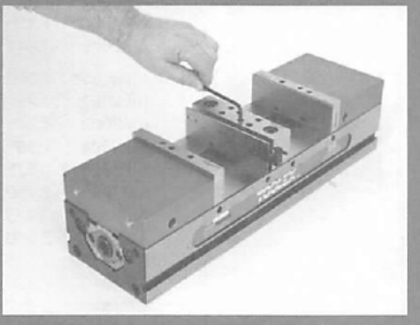

When finished with your job, unlock parallels (if needed) and turn the kick out screw to eject the jaw or parallel. You are ready to repeat the process for your next job.

ANGIC GLOBAL SOLUTIONS
Get quote
32-1274 • ww
Angic Global Solutions 1-888-872-0690
https://www.AngicGlobal.com Sales@AngicGlobal.com

AccuSnap Master Jaws

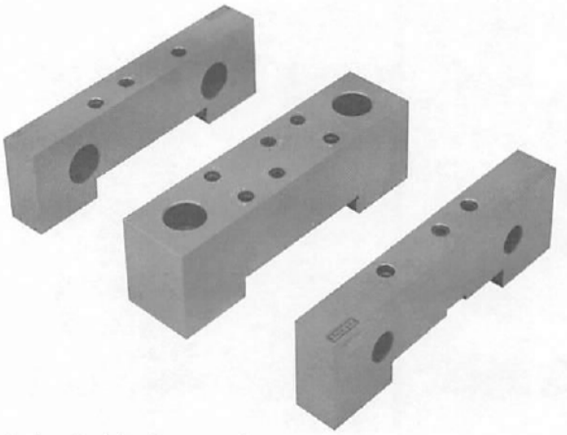

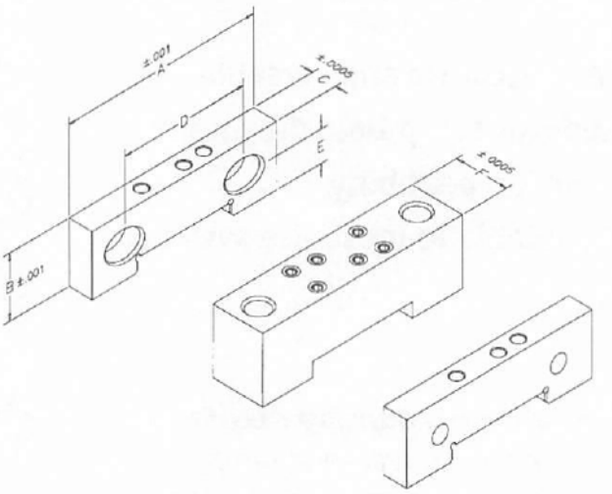

Adaptable to most vise jaw systems!

- For ReLock applications, AccuSnap master jaws mount to the SnapLock carrier jaws and accept all AccuSnap jaw components.
- Install AccuSnap master jaws to Snap-Lock carrier jaws on vise for squareness.
- Replacement parts are available (page 179).
- 3-piece set includes wrench.

Vise Size	Part Description	Part Number	A	B	C	D	E	F
4"	3 pc. Set	AMJ4035	3.980	1.350	.560	2.500	.687	–
	2 Outside	AMJ4000	3.980	1.350	.560	2.500	.687	–
	1 Center	AMJ4030	3.980	1.350	–	2.500	.687	1.250
6"	3 pc. Set	AMJ6035	5.980	1.850	.750	3.875	.937	–
	2 Outside	AMJ6000	5.980	1.850	.750	3.875	.937	–
	1 Center	AMJ6030	5.980	1.850	–	3.875	.937	1.500
8"	3 pc. Set	AMJ8035	7.980	2.350	1.125	4.750	1.218	–
	2 Outside	AMJ8000	7.980	2.350	1.125	4.750	1.218	–
	1 Center	AMJ8030	7.980	2.350	–	4.750	1.218	2.000

AccuSnap Individual Parallel Sets

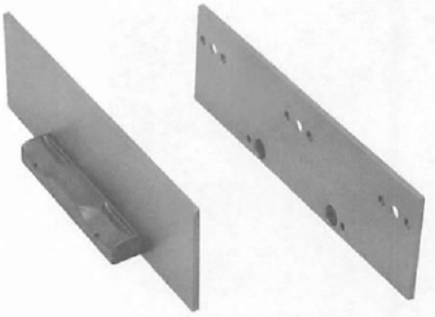

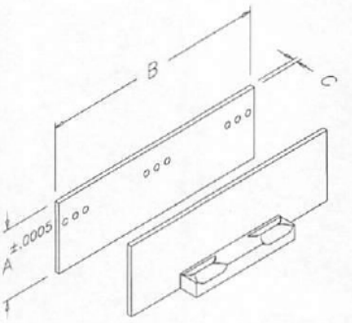

- Use in conjunction with AccuSnap master jaws (above).
- Parallels "snap" into position quickly and easily.
- Parallels are ejected from the master jaws via a patented kick out pawl assembly.
- Packaged two to a set.
- Can be used in conjunction with AccuSnap modular workstops shown on page 162.
- Expanded parallel sets available on page 159.

Vise Size	Part Number	A	B	C
4"	AIP4001*	.500	3.980	.118
	AIP4002*	.625	3.980	.118
	AIP4003*	.750	3.980	.118
	AIP4004	.875	3.980	.118
	AIP4005	1.000	3.980	.118
	AIP4006	1.125	3.980	.118
	AIP4007	1.250	3.980	.118
	AIP4008	1.312	3.980	.118
6"	AIP6001*	.750	5.980	.118
	AIP6002*	1.000	5.980	.118
	AIP6003	1.125	5.980	.118
	AIP6004	1.250	5.980	.118
	AIP6005	1.375	5.980	.118
	AIP6006	1.500	5.980	.118
	AIP6007	1.625	5.980	.118
	AIP6008	1.750	5.980	.118
	AIP6009	1.812	5.980	.118
8"	AIP8001*	1.000	7.980	.118
	AIP8002	1.250	7.980	.118
	AIP8003	1.375	7.980	.118
	AIP8004	1.500	7.980	.118
	AIP8005	1.625	7.980	.118
	AIP8006	1.750	7.980	.118
	AIP8007	1.875	7.980	.118
	AIP8008	2.000	7.980	.118
	AIP8009	2.125	7.980	.118
	AIP8010	2.250	7.980	.118

*Do not include center mounting holes for AccuSnap Modular Workstops

Get quote
Angic Global Solutions 1-888-872-0690
https://www.AngicGlobal.com Sales@AngicGlobal.com

AccuSnap Parallel Kits

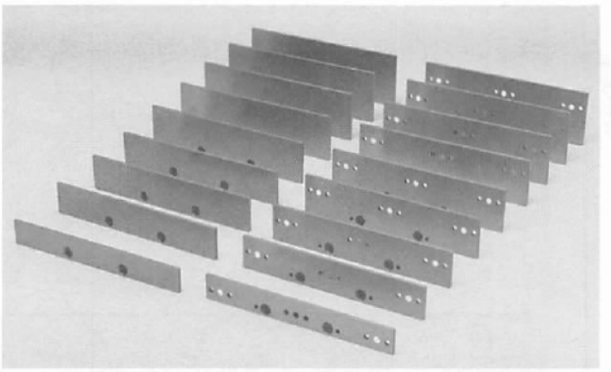

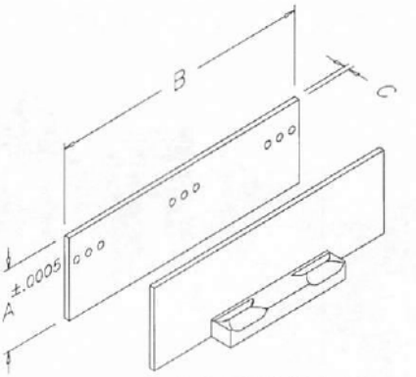

- AccuSnap parallels are to be used in conjunction with AccuSnap master jaws (page 158).
- Parallels "snap" into position quickly and easily.
- Parallels are ejected from the master jaws via a kick out pawl assembly.
- Can be used in conjunction with AccuSnap modular workstops (page 162).
- Individual parallel sets available (page 158).
- Holder racks available for 4" and 6" sets (page 163, sold separately).

CONTAINS 1 PAIR PER SIZE

Vise Size	Part Number Basic	Part Number Advanced	Basic A	Advanced A	B	C
4"	APS4000	APS4001	.500* .750* 1.000 1.250 1.312	.500* 1.000 .625* 1.125 .750* 1.250 .875 1.312	3.980	.118
6"	APS6000	APS6001	.750* 1.000* 1.250 1.500 1.750	.750* 1.500 1.000* 1.625 1.125 1.750 1.250 1.812 1.375	5.980	.118
8"	APS8000	APS8001	1.000* 1.250 1.500 1.750 2.000 2.250	1.000* 1.750 1.250 1.875 1.375 2.000 1.500 2.125 1.625 2.250	7.980	.118

*Do not include center mounting holes for AccuSnap Modular Workstops

AccuSnap Mill Angles

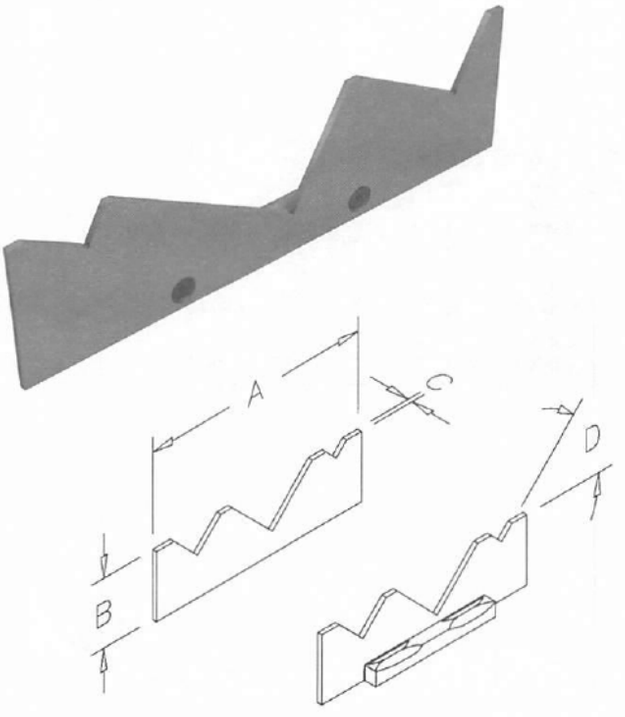

- AccuSnap mill angles are designed to be used with the AccuSnap master jaws (page 158).
- AccuSnap mill angle parallel sets available on page 160.
- Sold as individual units or matched sets.

Vise Size	Part Number Individual	Part Number Matched Set	A	B	C	(Degree) D
4"	AMA4020 AMA4025 AMA4030 AMA4035 AMA4040 AMA4045	AMM4020 AMM4025 AMM4030 AMM4035 AMM4040 AMM4045	4.000	1.240	.118	20 25 30 35 40 45
6"	AMA6020 AMA6025 AMA6030 AMA6035 AMA6040 AMA6045	AMM6020 AMM6025 AMM6030 AMM6035 AMM6040 AMM6045	6.000	1.740	.118	20 25 30 35 40 45
8"	AMA8020 AMA8025 AMA8030 AMA8035 AMA8040 AMA8045	AMM8020 AMM8025 AMM8030 AMM8035 AMM8040 AMM8045	8.000	2.230	.118	20 25 30 35 40 45

ANGIC GLOBAL SOLUTIONS
Get quote
Angic Global Solutions 1-888-872-0690
https://www.AngicGlobal.com Sales@AngicGlobal.com

AccuSnap Mill Angle Kits

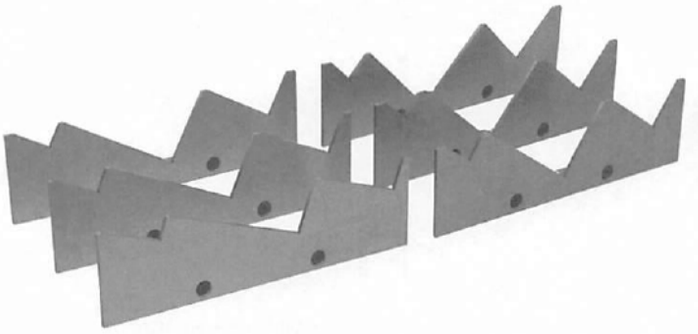

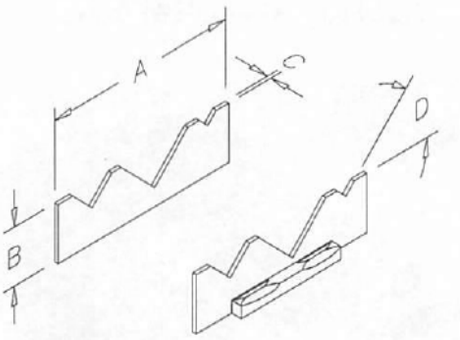

- Designed to be used with the AccuSnap master jaws on page 158.
- AccuSnap individual mill angles are on page 159.

Vise Size	Part Number	A	B	C	(1 of each degree) D
4"	AMA4000	4.000	1.240	.118	20 25 30 35 40 45
6"	AMA6000	6.000	1.740	.118	20 25 30 35 40 45
8"	AMA8000	8.000	2.230	.118	20 25 30 35 40 45

AccuSnap Machinable Fixture Jaws

Front view

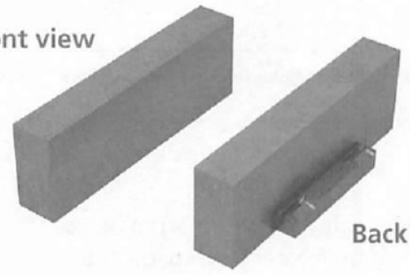

Back view

Sold as individual units

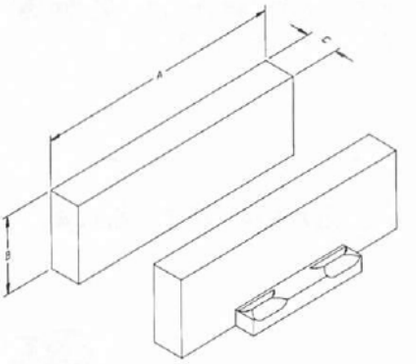

Can be modified to fit your individual needs.

- Use in conjunction with AccuSnap master jaws on page 158.
- Jaws "snap" intoposition quickly and easily.
- Jaws are ejected from the master jaws via a kick out pawl assembly.

Vise Size	Part Number Aluminum	Steel	A	B	C
4"	ASJ4000 ASJ4001	ASJ4020 ASJ4021	3.980	1.500	.690 1.255
6"	ASJ6000 ASJ6001	ASJ6020 ASJ6021	5.980	2.000	.750 1.500
8"	ASJ8000 ASJ8001	ASJ8020 ASJ8021	7.980	2.500	1.250 2.500

ANGIC GLOBAL SOLUTIONS
Get quote
2-1274 • www
Angic Global Solutions 1-888-872-0690
https://www.AngicGlobal.com Sales@AngicGlobal.com

AccuSnap Packages

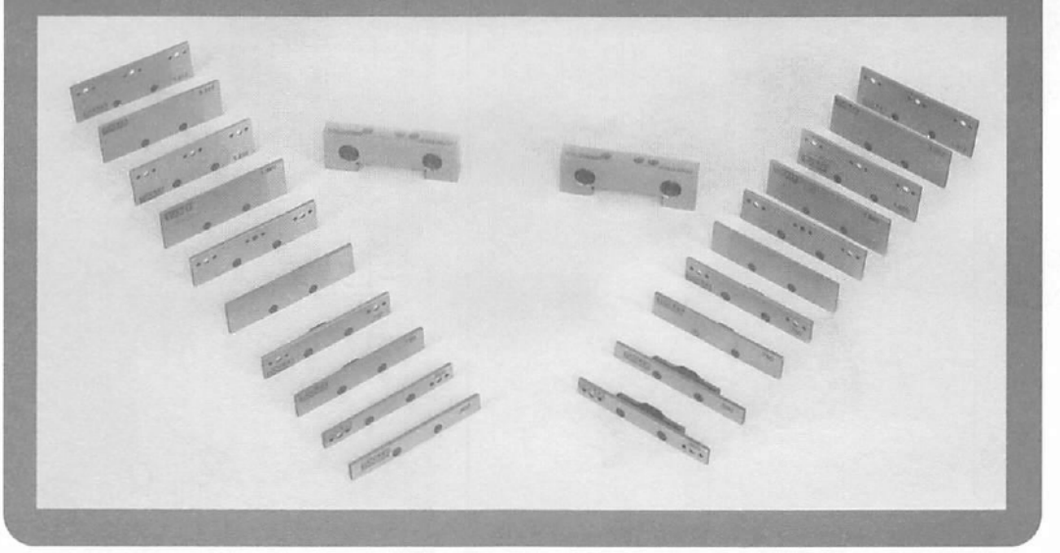

Packages Available for Single Station Vises

THREE STARTER PACKAGES AVAILABLE

Each package contains the following AccuSnap items:

Vise Size	Part Number	Outside Master Jaws	Basic Parallel Set	Advanced Parallel Set	Mill Angle Set	Aluminum Fixture Jaws	QuickStop
BASIC STARTER PACKAGE							
4"	ABP4000	1 Pair	1 Set				
6"	ABP6000	1 Pair	1 Set				
8"	ABP8000	1 Pair	1 Set				
ADVANCED STARTER PACKAGE							
4"	AAP4000	1 Pair		1 Set			
6"	AAP6000	1 Pair		1 Set			
8"	AAP8000	1 Pair		1 Set			
TOOLMAKER/MOLDER PACKAGE							
4"	ATM4000	1 Pair		1 Set	1 Set	2 Pieces	1 Piece
6"	ATM6000	1 Pair		1 Set	1 Set	2 Pieces	1 Piece
8"	ATM8000	1 Pair		1 Set	1 Set	2 Pieces	1 Piece

Packages Available for Competitor Double Station Vises

Each package contains the following AccuSnap items:

Vise Size	Part Number	Outside Master Jaws	Basic Parallel Set
4"	AAP4002	2 Pairs	2 Sets
6"	AAP6002	2 Pairs	2 Sets
8"	AAP8002	2 Pairs	2 Sets

ANGIC GLOBAL SOLUTIONS Get quote
32-1274 • ww
Angic Global Solutions 1-888-872-0690
https://www.AngicGlobal.com Sales@AngicGlobal.com

AccuSnap Modular Workstops

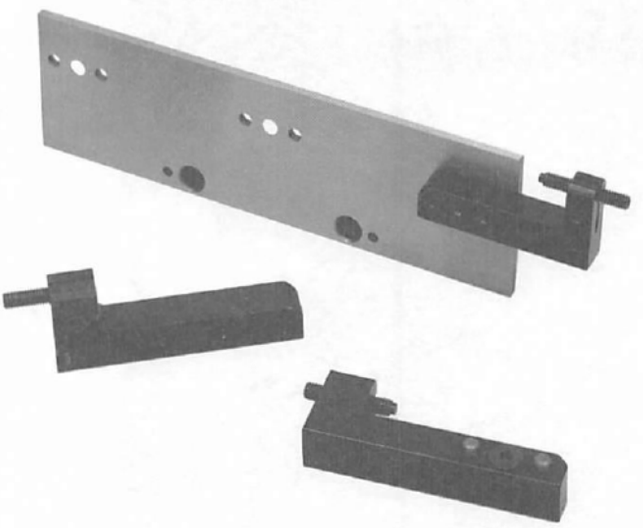

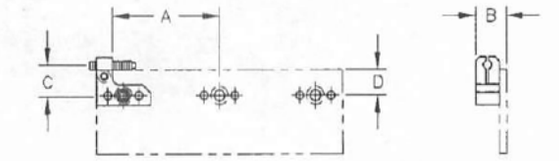

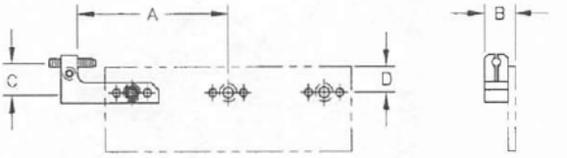

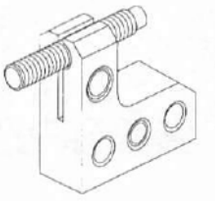

- Ideal for off-line set-up applications.
- Provides extremely accurate workpiece location and repeatability when used in conjunction with the Accu-Snap modular workstop presetting gage.
- Designed to be used with the AccuSnap parallel sets.
- The AccuSnap modular workstop is attached by inserting the locating dowel pin into desired stop location on face of parallel. Secure the workstop by tightening supplied flat head cap screw.

Vise Size	Part Number Right Hand	Part Number Left Hand	A	B	C	D
4"	AWS4000	AWS4020	1.75	.493	.469	.28
	AWS4001	AWS4021	2.50	.493	.469	.28
	AWS4010	AWS4030	1.75	.493	.969	.28
	AWS4011	AWS4031	2.50	.493	.969	.28
6"	AWS6000	AWS6020	2.68	.493	.657	.47
	AWS6001	AWS6021	3.68	.493	.657	.47
	AWS6010	AWS6030	2.68	.493	1.157	.47
	AWS6011	AWS6031	3.68	.493	1.157	.47
8"	AWS8000	AWS8020	3.50	.618	.626	.44
	AWS8001	AWS8021	5.00	.618	.626	.44
	AWS8010	AWS8030	3.50	.618	1.126	.44
	AWS8011	AWS8031	5.00	.618	1.126	.44

AccuSnap Spacers

- Used in conjunction with AccuSnap workstops.
- Allows spacing between the workstop and parallel.

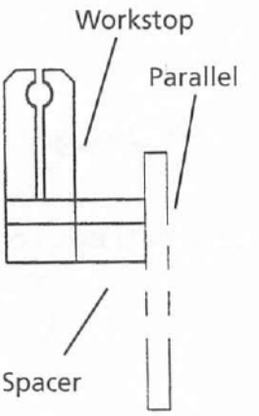

Vise Size	Part Number	A
4"	AWS4040	.375
6"	AWS6040	.375
8"	AWS8040	.500



Get quote
2-1274 • ww
Angic Global Solutions 1-888-872-0690
https://www.AngicGlobal.com Sales@AngicGlobal.com

TE-CO®

TOOLEX®

Holder Racks for AccuSnap Parallels

- Manufactured from steel.
- Allows convenient storage of parallels.



Vise Size	Part Number	Fits Parallel Kit
4"	AHR4000	APS4001 Advanced
4"	AHR4001	APS4000 Basic
6"	AHR6000	APS6001 Advanced
6"	AHR6001	APS6000 Basic

Visit our NEW website at www.te-co.com



ANGIC GLOBAL SOLUTIONS
Get quote
32-1274 • ww
Angic Global Solutions 1-888-872-0690
https://www.AngicGlobal.com Sales@AngicGlobal.com

QuickChange Vise Jaw System

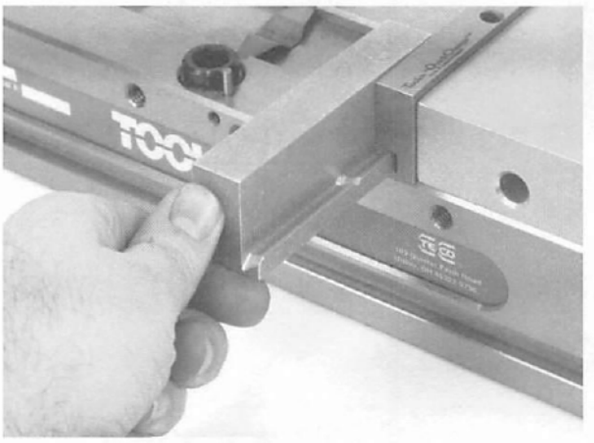

- Fast, accurate and versatile
- Drastically reduces setup time
- Adaptable to most vise systems

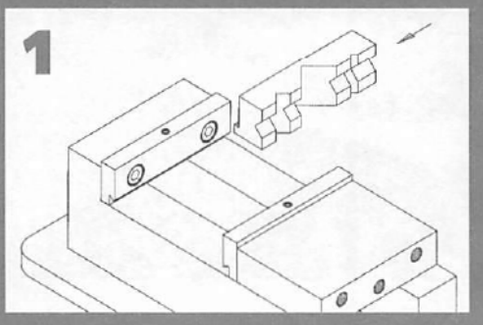

To install the QuickChange System, simply attach the master jaws to your carrier jaw system using the industry standard bolt pattern provided. Align the accesory's gib with the master jaw's dovetail and slide into position.

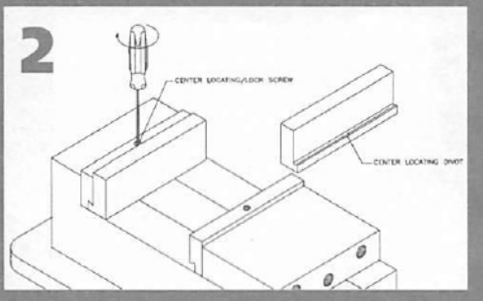

After the accessory is in position simply tighten the provided locking/self-centering screw to secure and locate properly. You are now ready to fixture your workpiece.

TOOLEX®

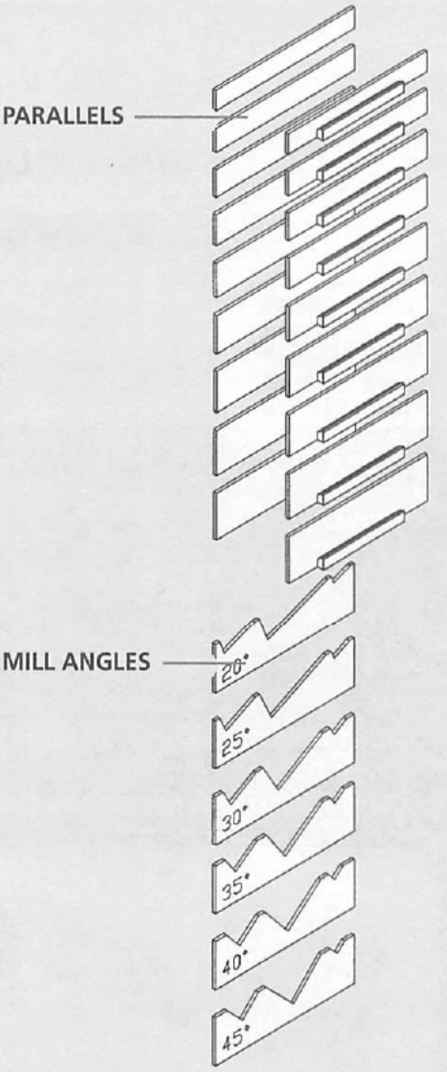

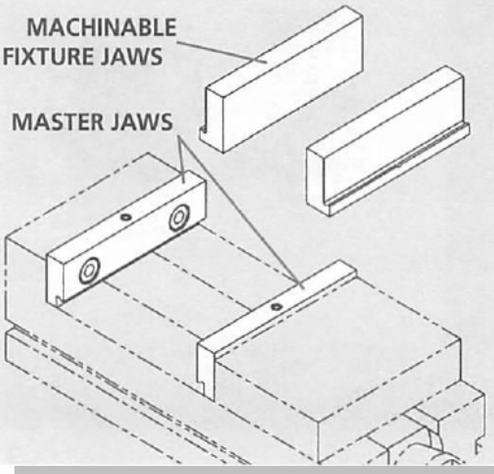

ANGIC GLOBAL SOLUTIONS
Get quote
Angic Global Solutions 1-888-872-0690
https://www.AngicGlobal.com Sales@AngicGlobal.com

QuickChange Master Jaws

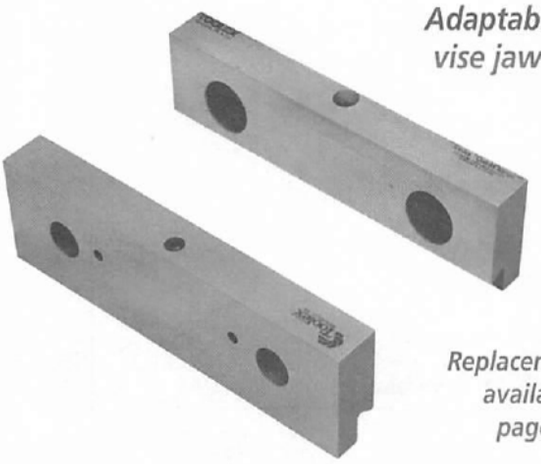

Adaptable to most vise jaw systems!

Replacement parts available on page 180.

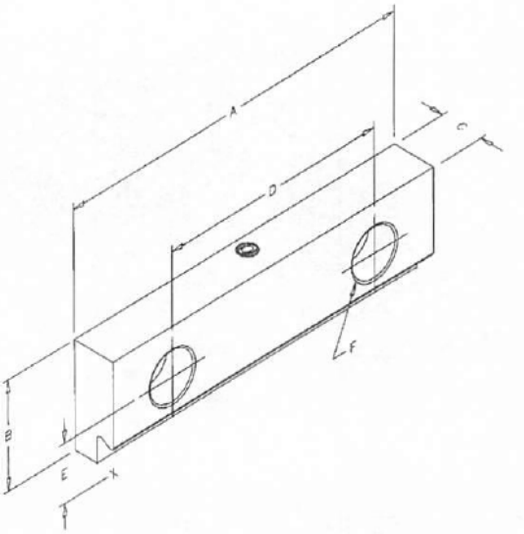

- For ReLock applications, QuickChange master jaws mount to the SnapLock carrier jaws and accept all QuickChange jaw components.
- Install QuickChange master jaws to Snaplock carrier jaws on vise for squareness.
- Accessories slide into position via a dovetail slot.

Vise Size	Part Number	A	B	C	D	E	F
4"	QMJ4000	4.06	1.235	.560	2.500	.687	3/8-16 SHCS
6"	QMJ6000	6.12	1.735	.735	3.875	.937	1/2-13 SHCS
8"	QMJ8000	8.12	2.230	1.105	4.750	1.128	5/8-11 SHCS

Before mounting QuickChange Master Jaws, thoroughly inspect, clean and remove any burrs or chips from mounting surface.

QuickChange Individual Parallel Sets

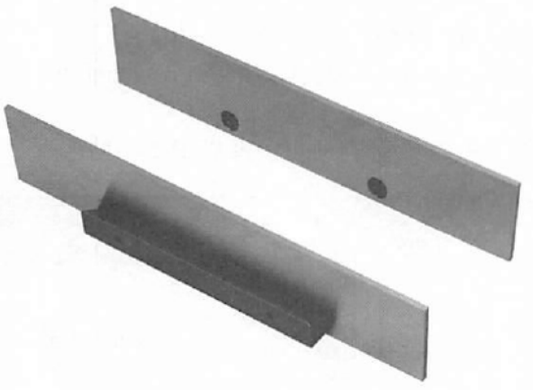

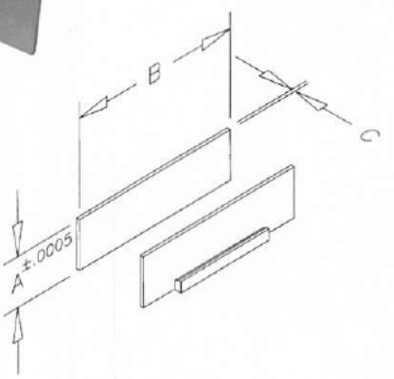

- QuickChange parallels are designed to be used with QuickChange master jaws.
- Parallels are packaged 2 per set.
- Expanded QuickChange parallel sets are available on page 166.

Vise Size	Part Number	A	B	C
4"	QIP4001	.500	3.980	.118
	QIP4002	.625	3.980	.118
	QIP4003	.750	3.980	.118
	QIP4004	.875	3.980	.118
	QIP4005	1.000	3.980	.118
	QIP4006	1.062	3.980	.118
	QIP4007	1.125	3.980	.118
	QIP4008	1.190	3.980	.118
6"	QIP6001	.750	5.980	.118
	QIP6002	.875	5.980	.118
	QIP6003	1.000	5.980	.118
	QIP6004	1.125	5.980	.118
	QIP6005	1.250	5.980	.118
	QIP6006	1.375	5.980	.118
	QIP6007	1.500	5.980	.118
	QIP6008	1.625	5.980	.118
	QIP6009	1.690	5.980	.118
8"	QIP8001	1.000	7.980	.118
	QIP8002	1.250	7.980	.118
	QIP8003	1.375	7.980	.118
	QIP8004	1.500	7.980	.118
	QIP8005	1.625	7.980	.118
	QIP8006	1.750	7.980	.118
	QIP8007	1.875	7.980	.118
	QIP8008	2.000	7.980	.118
	QIP8009	2.125	7.980	.118

Before mounting QuickChange Master Jaws, thoroughly inspect, clean and remove any burrs or chips from mounting surface.

ANGIC GLOBAL SOLUTIONS Get quote
32-1274 • ww
Angic Global Solutions 1-888-872-0690
https://www.AngicGlobal.com Sales@AngicGlobal.com

QuickChange Parallel Kits



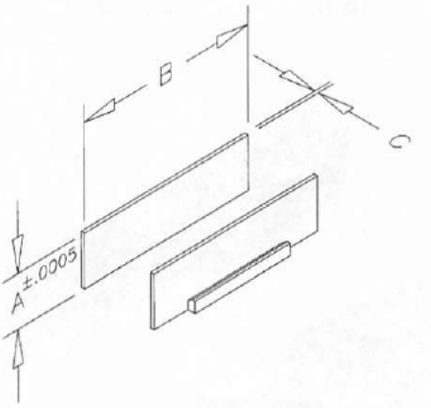

- QuickChange parallels are designed to be used with the QuickChange master jaws shown on page 165.
- Individual QuickChange parallel sets available on page 165.
- QuickChange Starter Package available on page 168.

CONTAINS 1 PAIR PER SIZE

Vise Size	Part Number Basic	Part Number Advanced	Basic A	Advanced A	B	C
4"	QPS4000	QPS4001	.500 .750 1.000 1.125 1.190	.500 1.000 .625 1.125 .750 1.062 .875 1.190	3.980	.118
6"	QPS6000	QPS6001	.750 1.000 1.250 1.500 1.625	.750 1.375 .875 1.500 1.000 1.625 1.125 1.690 1.250	5.980	.118
8"	QPS8000	QPS8001	1.000 1.250 1.500 1.750 2.000	1.000 1.750 1.250 1.875 1.375 2.000 1.500 2.125 1.625	7.980	.118

QuickChange Individual Mill Angles

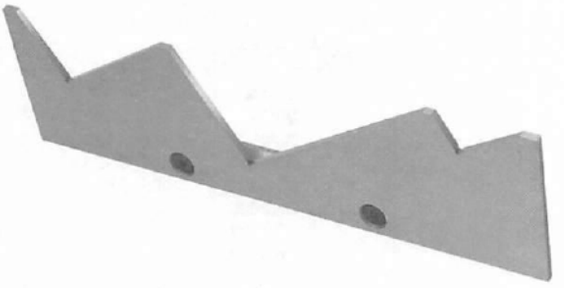

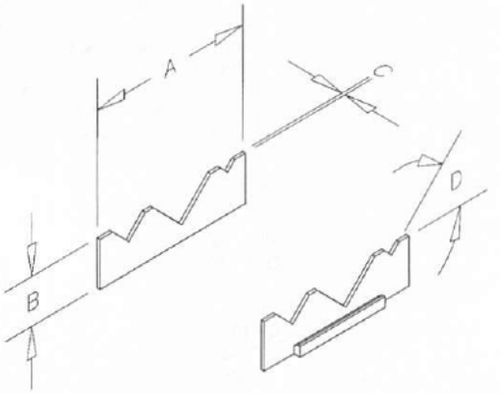

Sold as individual units

- QuickChange mill angles are designed to be used with the QuickChange master jaws (page 165).
- QuickChange mill angle parallel set is available on page 167.
- QuickChange starter package is on page 168.

Vise Size	Part Number Individual	A	B	C	(Degree) D
4"	QMA4020 QMA4025 QMA4030 QMA4035 QMA4040 QMA4045	4.000	1.240	.118	20 25 30 35 40 45
6"	QMA6020 QMA6025 QMA6030 QMA6035 QMA6040 QMA6045	6.000	1.740	.118	20 25 30 35 40 45
8"	QMA8020 QMA8025 QMA8030 QMA8035 QMA8040 QMA8045	8.000	2.230	.118	20 25 30 35 40 45

ANGIC GLOBAL SOLUTIONS Get quote
32-1274 • ww
Angic Global Solutions 1-888-872-0690
https://www.AngicGlobal.com Sales@AngicGlobal.com

QuickChange Mill Angle Sets

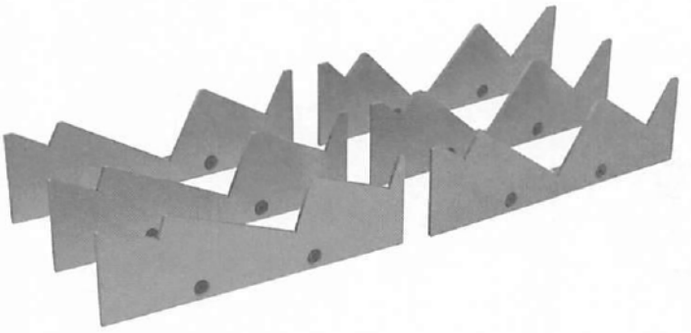

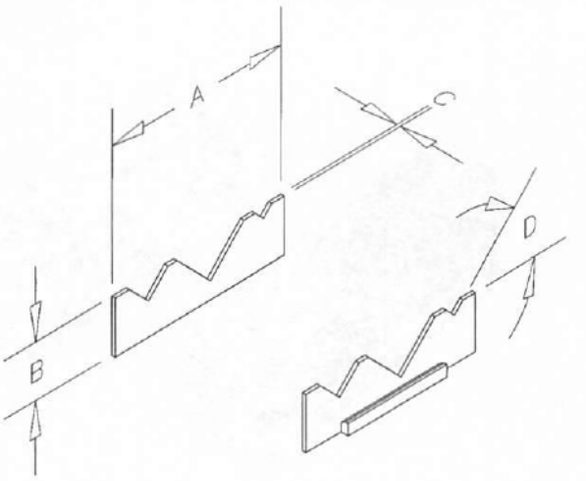

- QuickChange Mill Angles are designed to be used with QuickChange Master Jaws on page 165.
- Individual QuickChange Mill Angles are on page 166.
- QuickChange Starter Package available on page 168.

Vise Size	Part Number	A	B	C	(1 of each degree) D
4"	QMA4000	4.000	1.240	.118	20 25 30 35 40 45
6"	QMA6000	6.000	1.740	.118	20 25 30 35 40 45
8"	QMA8000	8.000	2.230	.118	20 25 30 35 40 45

Get quote
32-1274 • ww
Angic Global Solutions 1-888-872-0690
https://www.AngicGlobal.com Sales@AngicGlobal.com

QuickChange Machinable (Soft) Fixture Jaws

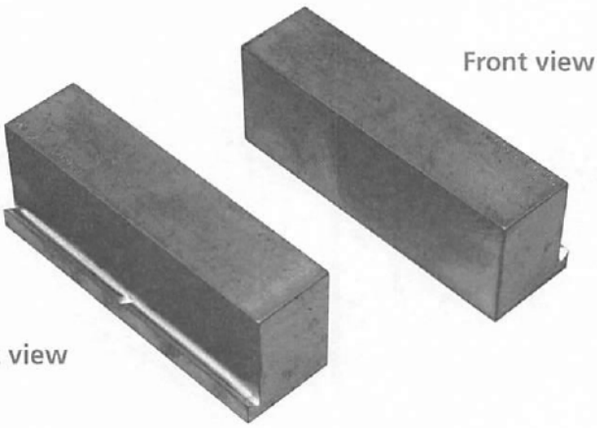

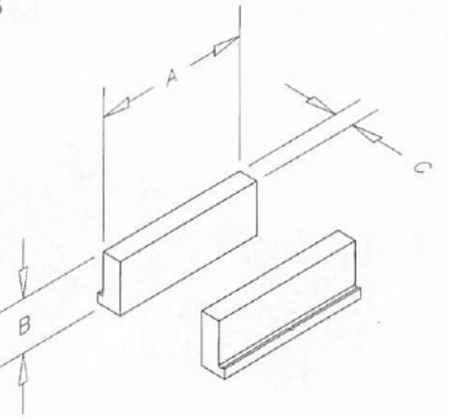

- QuickChange Machinable Fixture Jaws are to be used in conjunction with QuickChange Master Jaws shown on page 165.
- QuickChange Machinable Fixture Jaws can be modified to fit your individual needs.

Sold as individual units

Vise Size	Part Number Aluminum	Part Number Steel	A	B	C
4"	QSJ4000 QSJ4001	QSJ4020 QSJ4021	4.00	1.50	.69 1.38
6"	QSJ6000 QSJ6001	QSJ6020 QSJ6021	6.00	2.00	.75 1.50
8"	QSJ8000 QSJ8001	QSJ8020 QSJ8021	8.00	2.50	1.25 2.50

QuickChange Starter Packages

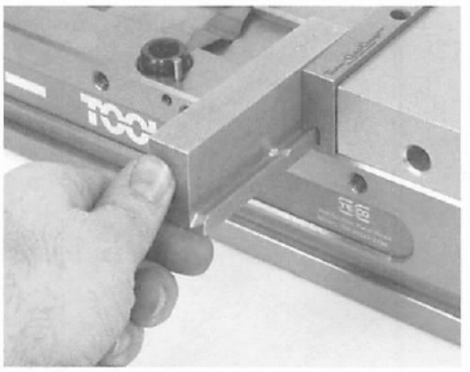

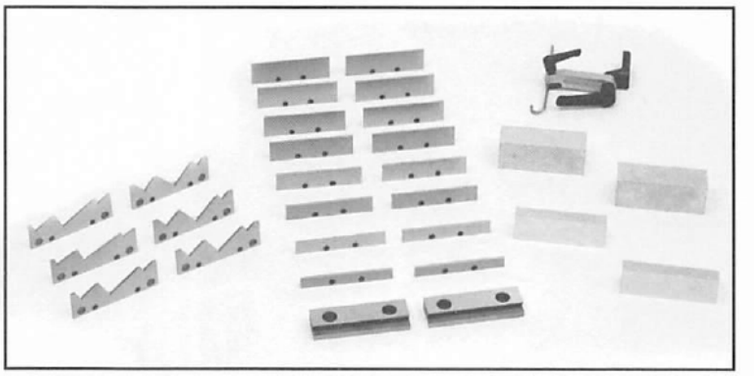

Toolmaker/Molder Package shown

Each package contains the following QuickChange items:

Vise Size	Part Number	Master Jaws	Basic Parallel Set	Advanced Parallel Set	Mill Angle Set	Aluminum Fixture Jaws	QuickStop
BASIC STARTER PACKAGE							
4" 6" 8"	QBP4000 QBP6000 QBP8000	1 Pair 1 Pair 1 Pair	1 Set 1 Set 1 Set				
ADVANCED STARTER PACKAGE							
4" 6" 8"	QAP4000 QAP6000 QAP8000	1 Pair 1 Pair 1 Pair		1 Set 1 Set 1 Set			
TOOLMAKER/MOLDER PACKAGE							
4" 6" 8"	QTM4000 QTM6000 QTM8000	1 Pair 1 Pair 1 Pair		1 Set 1 Set 1 Set	1 Set 1 Set 1 Set	2 Pieces 2 Pieces 2 Pieces	1 Piece 1 Piece 1 Piece

THREE STARTER PACKAGES AVAILABLE

ANGIC GLOBAL SOLUTIONS
Get quote
2-1274 • ww
Angic Global Solutions 1-888-872-0690
https://www.AngicGlobal.com Sales@AngicGlobal.com

VISE ACCESSORIES

Bolt-on Aluminum Soft Jaws

- Fits most industry vises including all Toolex vises.
- Aluminum Soft Jaws can be modified quickly and inexpensively.

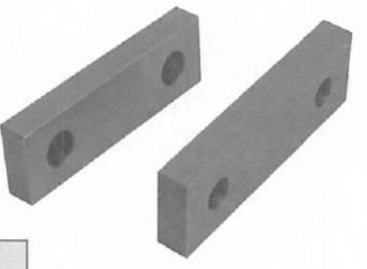

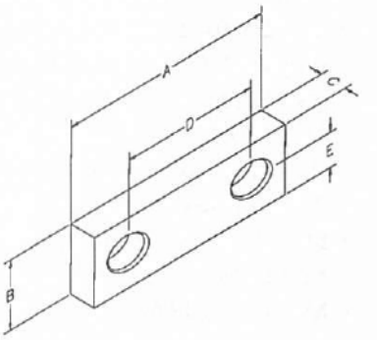

Vise Size	Part Number	A	B	C	D	E
4"	SJB4000	5.00	1.50	1.00	2.500	.687
6"	SJB6000	7.00	2.00	1.25	3.875	.937
8"	SJB8000	9.00	2.50	2.00	4.750	1.218

Standard Hard Jaws

- Manufactured from steel.
- Center jaw is only adaptable to the Toolex ReLock System.
- Outside jaws fit most vises via universal bolt hole pattern.
- Install Hard Jaws to SnapLock Carrier Jaws on vise for squareness.

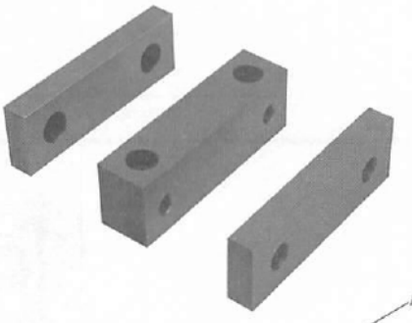

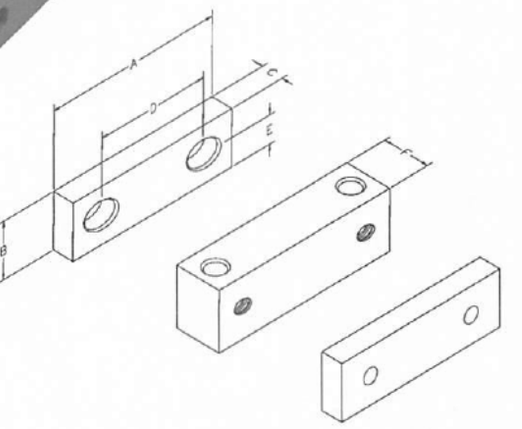

Vise Size	Part Description	Part Number	A	B	C	D	E	F
4"	3 pc. Set	SHJ4035	3.980	1.350	.560	2.500	.687	1.250
	2 Outside	SHJ4000	3.980	1.350	.560	2.500	.687	–
	1 Center	SCJ4030	3.980	1.350	–	–	–	1.250
6"	3 pc. Set	SHJ6035	5.980	1.850	.750	3.875	.937	1.500
	2 Outside	SHJ6000	5.980	1.850	.750	3.875	.937	–
	1 Center	SCJ6030	5.980	1.850	–	–	–	1.500
8"	3 pc. Set	SHJ8035	7.980	2.350	1.125	4.750	1.218	1.980
	2 Outside	SHJ8000	7.980	2.350	1.125	4.750	1.218	–
	1 Center	SCJ8030	7.980	2.350	–	–	–	1.980

ANGIC GLOBAL SOLUTIONS
Get quote
332-1274 • ww
Angic Global Solutions 1-888-872-0690
https://www.AngicGlobal.com Sales@AngicGlobal.com

Vise Clamps

- Adaptable to most vises
- Vise Clamps are used to secure vise to tooling plate or machine table.
- Insert clamp nose into groove on side of vise.
- Use clamps with standard socket head cap screws.
- Black Oxide Finish and Case Hardened
- Material: 1018 Steel

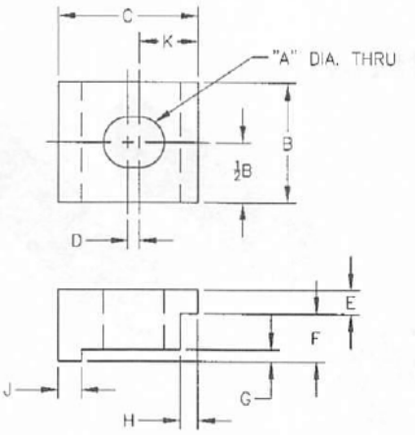

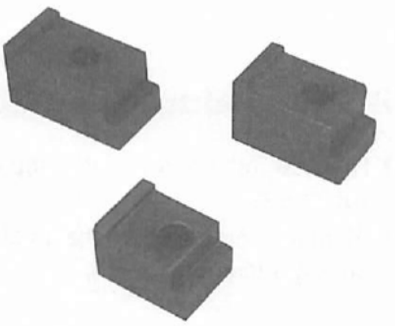

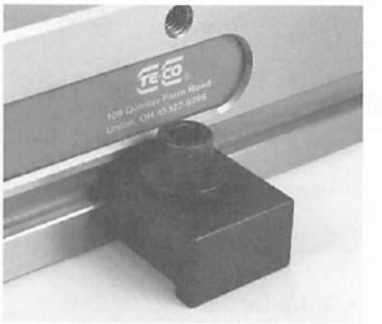

Vise Size	Part Number	Screw Size A	B	C	D	E	F	G	H	J	K
4"	RWS4553	3/8	1.25	1.50	.13	.25	.50	.13	.19	.25	.63
4"	RWS4554	1/2	1.25	1.50	.13	.25	.50	.13	.19	.25	.63
6"	RWS6553	3/8	1.25	2.12	.13	.50	.75	.19	.25	.25	.85
6"	RWS6554	1/2	1.25	2.12	.13	.50	.75	.19	.25	.25	.85
6"	RWS6555	5/8	1.25	2.12	.13	.50	.75	.19	.25	.25	.85

Vise Fixture Keys

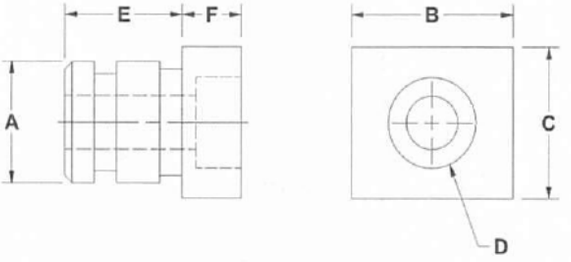

Precision keys allow accurate and precise positioning of vise to machine table.



*Screw Size

Vise Size	Part Number	A	B	C	D*	E	F
4" and 6"	44560	.500	9/16	1/2	#10	.500	.250
	44561	.500	11/16	5/8	#10	.500	.250
	44562	.500	13/16	3/4	#10	.500	.250
	44563	.500	1	7/8	#10	.500	.250
	44564	.500	16mm	14mm	#10	.500	.250
	44565	.500	20mm	18mm	#10	.500	.250
	44566	.500	24mm	22mm	#10	.500	.250
8"	44570	.750	13/16	3/4	1/4	.750	.375
	44571	.750	1	7/8	1/4	.750	.375
	44572	.750	1-1/16	1-1/8	1/4	.750	.375
	44573	.750	20mm	18mm	1/4	.750	.375
	44574	.750	24mm	22mm	1/4	.750	.375

Chip Shield Covers for Toolex Double Station Vise



- Three piece set includes two outside and one center chip shield.
- Fits the Toolex Double Station and Eight Station Vises only.
- Chip shields cover vise segment screw mechanism to keep out chips and debris.

Vise Size	Part Number
4"	RWS4561
6"	RWS6561
8"	RWS8561

2-1274 • www
ANGIC GLOBAL SOLUTIONS
Get quote
Angic Global Solutions 1-888-872-0690
https://www.AngicGlobal.com Sales@AngicGlobal.com

Universal Workstop - (Designed for Relock Double Station Vises)

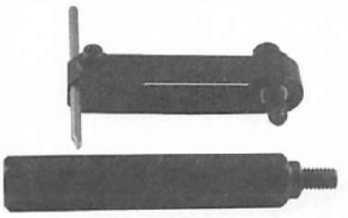

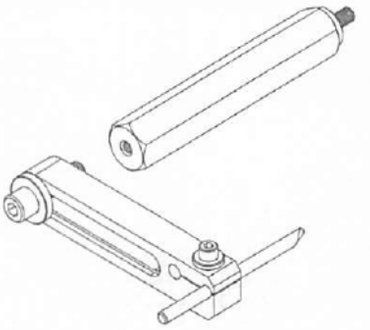

More than one extension can be used for larger workpieces.

Vise Size	Part Description	Part Number	Extension Length	Thread Size
4"	Workstop Extension	UWS4000 UWS4001	4.000	5/16-18
6"	Workstop Extension	UWS6003* UWS6004*	6.000	5/16-18
6"	Workstop Extension	UWS6000* UWS6001*	6.000	3/8-16
8"	Workstop Extension	UWS8000 UWS8001	8.000	1/2-13

*DESIGN CHANGE WAS MADE TO THE RWS6002 VISE:
3/8-16 tapped hole was modified to a 5/16-18 tapped hole.
Check your vise to verify the size you need before ordering.

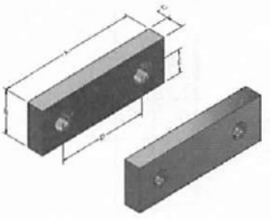

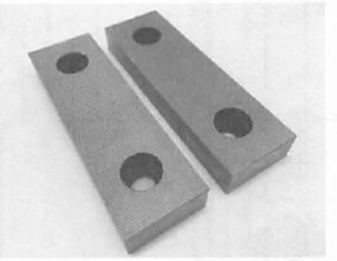

Vise Size	Part Description	Part Number	A	B	C	D*	E
4"	2 Outside	SHJ4000S	3.980	1.350	.560	2.500	.687
6"	2 Outside	SHJ6000S	5.980	1.850	.750	3.875	.937
8"	2 Outside	SHJ8000S	7.980	2.350	1.125	4.75	1.218

Vise Mounting Kit: Part No. 90442

Designed for 4" & 6" single station vises

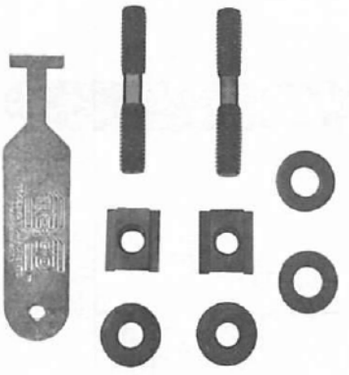

Kit contains:

Two 1/2 x 3 Studs
Two 1/2 x 5/8 T-Nuts
Two 1/2 - 13 Flange Nuts
Two 1/2 Flat Washers
One T-Slot Cleaner

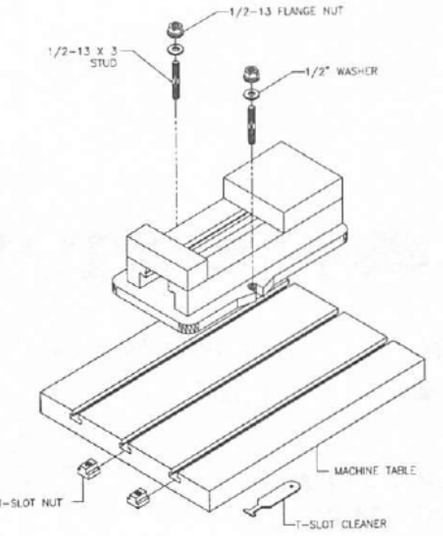

QuickStop

- Universal mounting bracket mounts to many vise configurations.
- After tightening, handles can be rotated 360 degrees for tool and cutter clearance.
- Fully adjustable to adapt to many workpiece configurations.



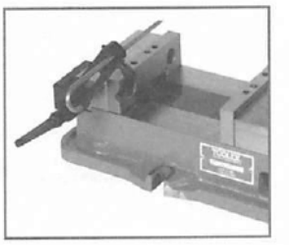

Vise Size	Part Number	Thread Size
4"	QVS4000	3/8-16
6"	QVS6000	1/2-13
8"	QVS8000	5/8-11

ANGIC GLOBAL SOLUTIONS Get quote
Angic Global Solutions 1-888-872-0690
https://www.AngicGlobal.com Sales@AngicGlobal.com

8-STATION VISE BASEPLATE MOUNTING INFORMATION

Universal Baseplate for 4" ReLock 8-Station Vise
PART NO. RWS4549

Included with RWS4008 vise

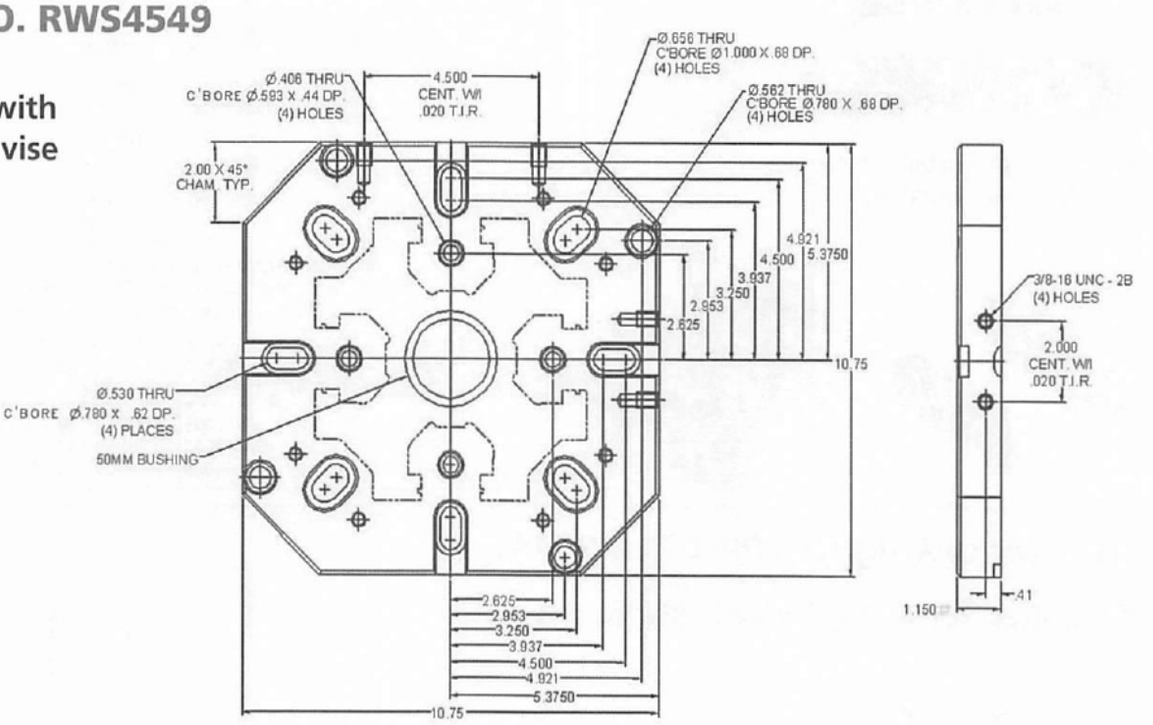

Visit www.te-co.com for larger view of drawings

400mm Baseplate for 4" ReLock 8-Station Vise
PART NO. RWS4559

Included with RWS4408 vise

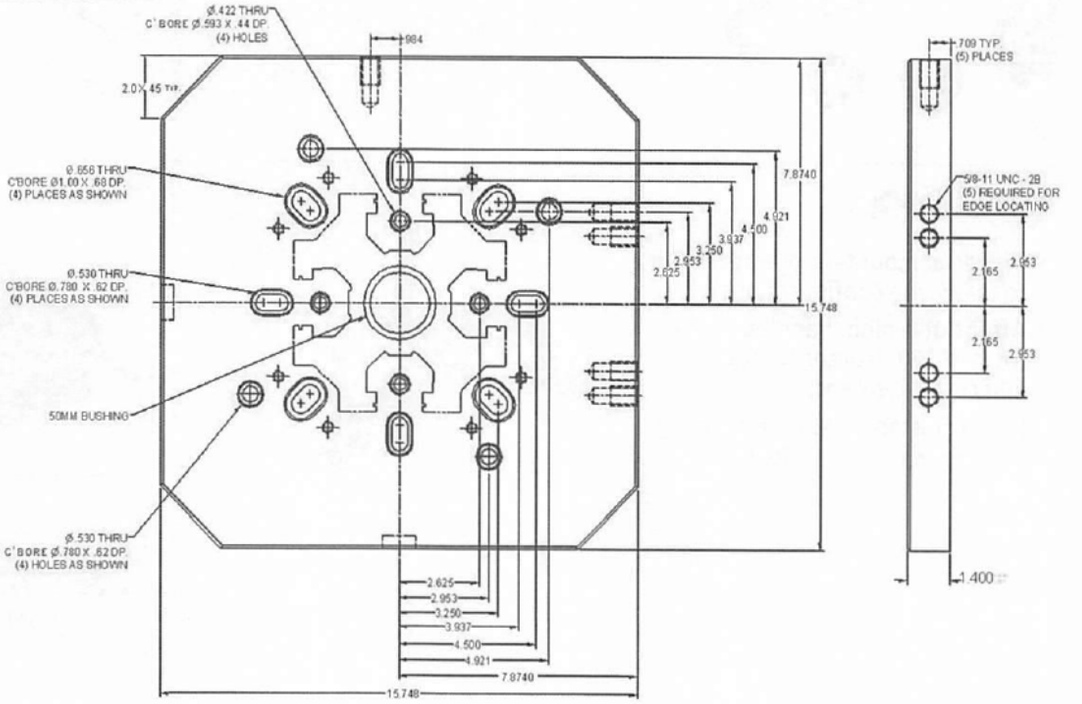

Get quote
Angic Global Solutions 1-888-872-0690
https://www.AngicGlobal.com Sales@AngicGlobal.com

8-STATION VISE BASEPLATE MOUNTING INFORMATION

Universal Baseplate for 6" ReLock 8-Station Vise
PART NO. RWS6549

Included with RWS6008 vise

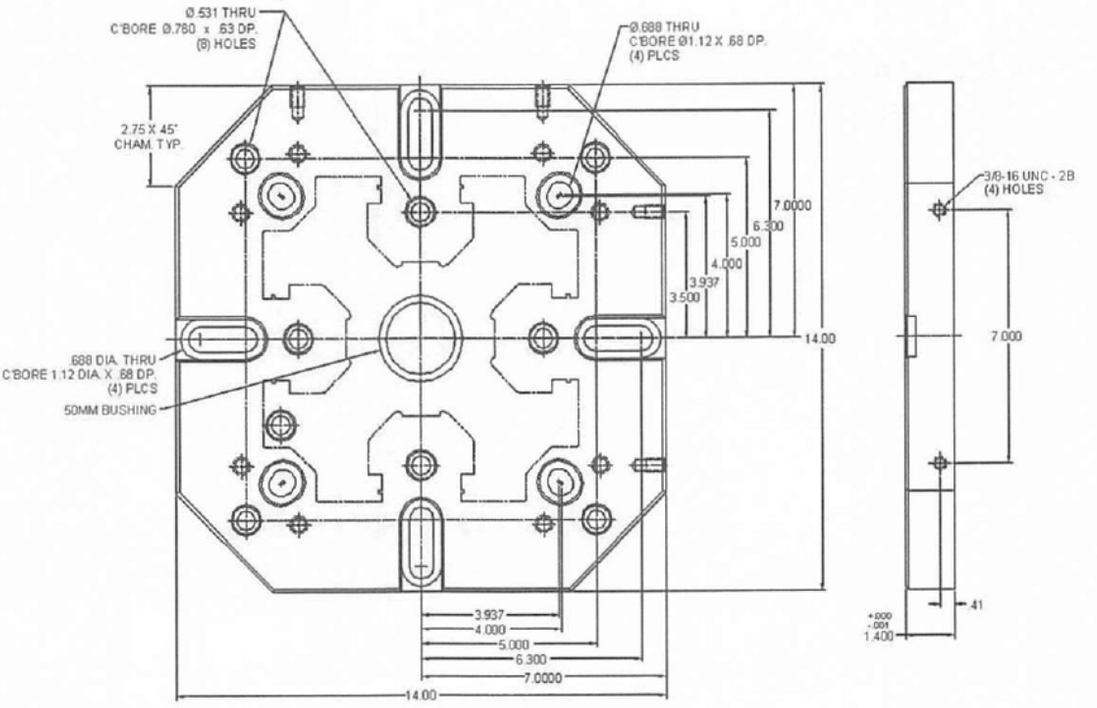

Visit www.te-co.com for larger view of drawings

400mm Baseplate for 6" ReLock 8-Station Vise
PART NO. RWS6559

Included with RWS6408 vise

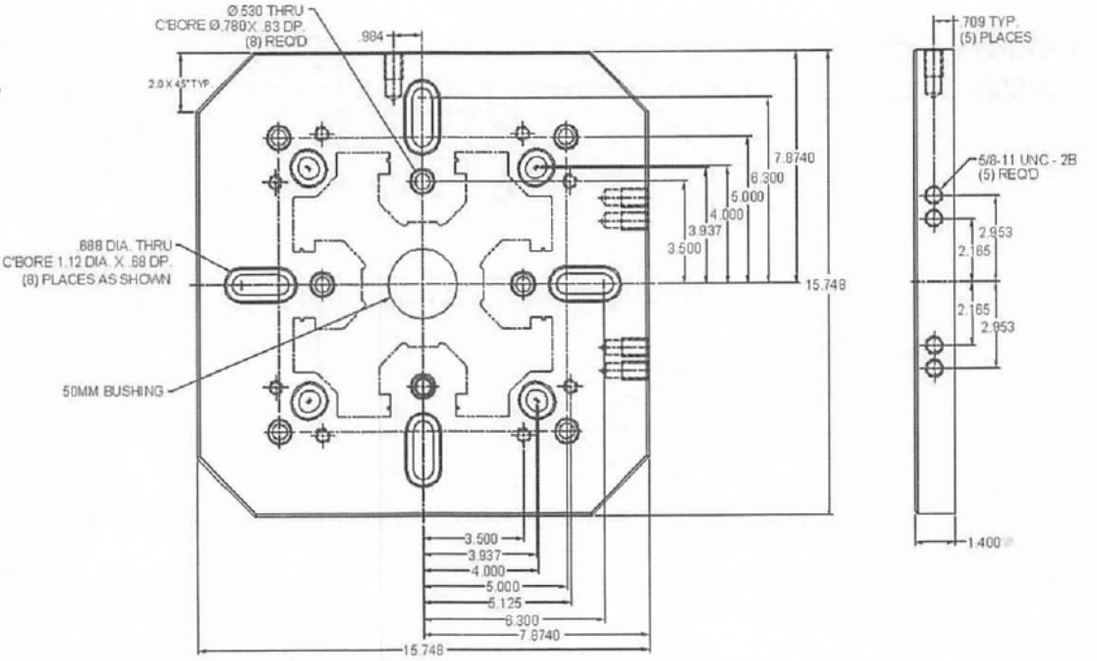

ANGIC GLOBAL SOLUTIONS
Get quote
Angic Global Solutions 1-888-872-0690
https://www.AngicGlobal.com Sales@AngicGlobal.com

8-STATION VISE BASEPLATE MOUNTING INFORMATION

500mm Baseplate for 6" ReLock 8-Station Vise
PART NO. RWS6579

Included with RWS6058 vise

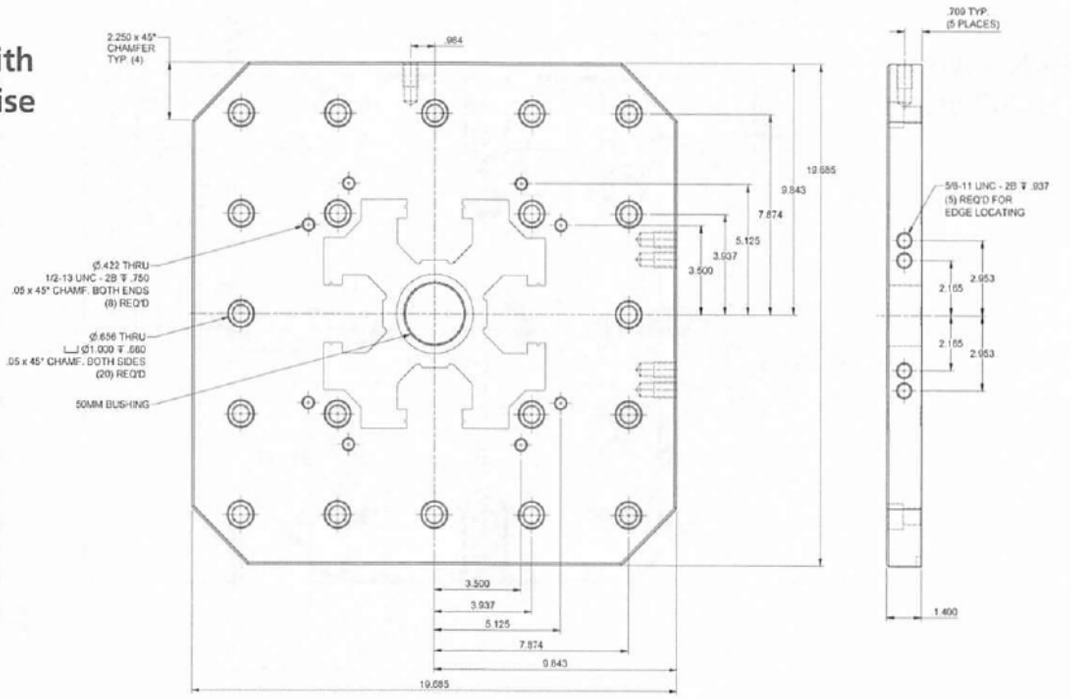

Visit www.te-co.com for larger view of drawing

Universal Baseplate for 8" ReLock 8-Station Vise
PART NO. RWS8549

Included with RWS8008 vise

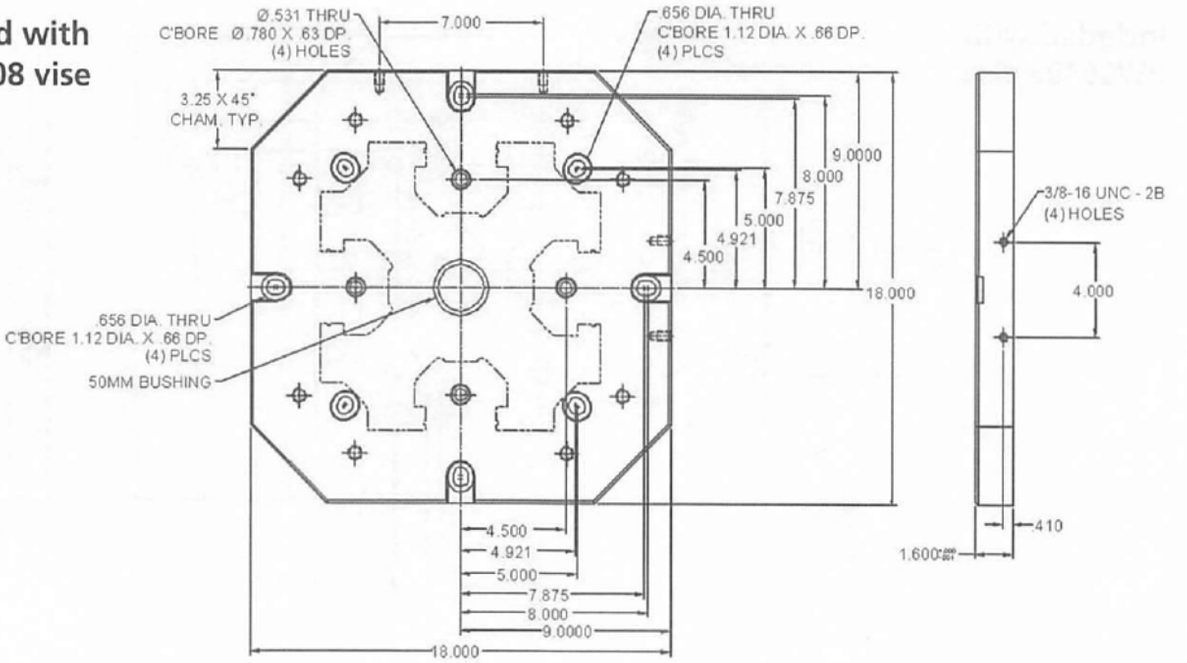

Get quote
Angic Global Solutions 1-888-872-0690
https://www.AngicGlobal.com Sales@AngicGlobal.com

RELOCK® 4 & 6 INCH SEGMENT ASSEMBLY

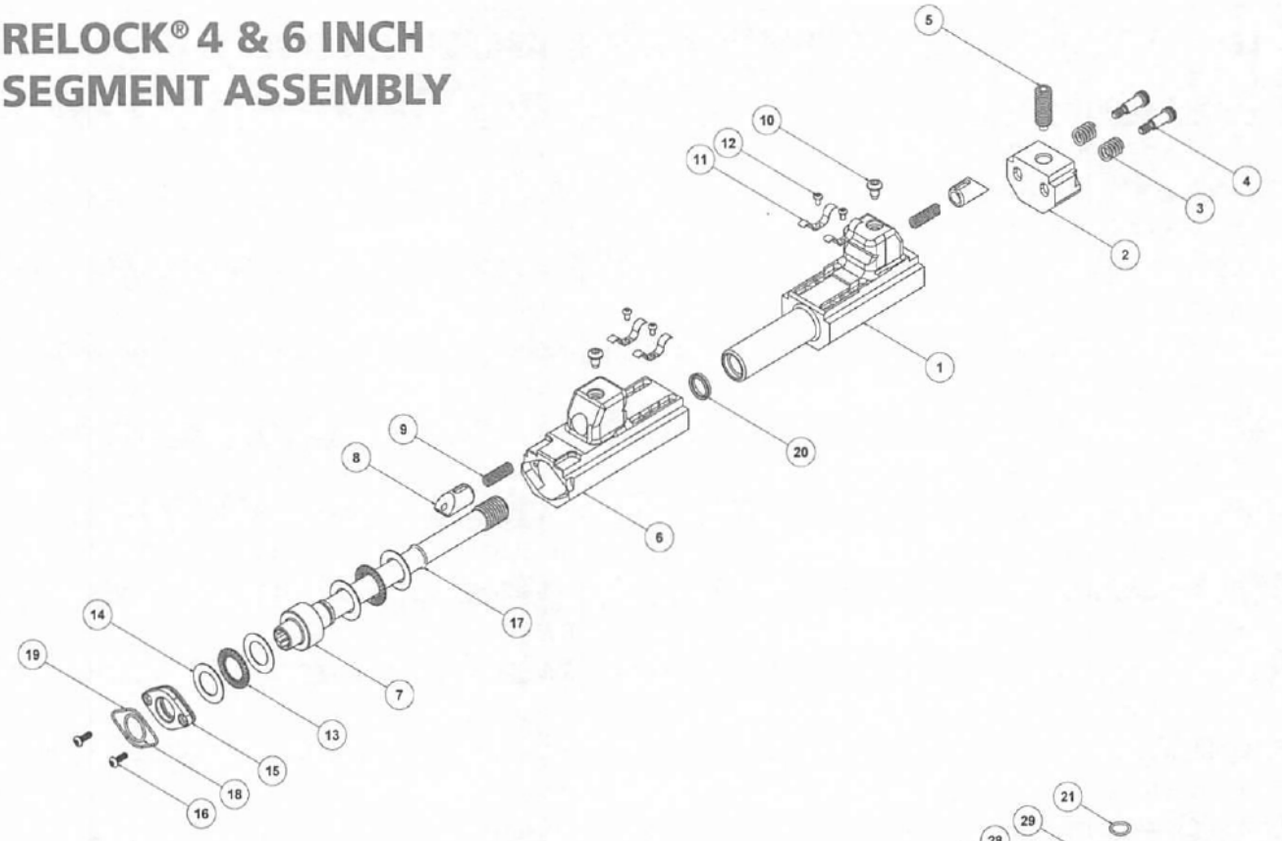

RELOCK® 8 INCH SEGMENT ASSEMBLY

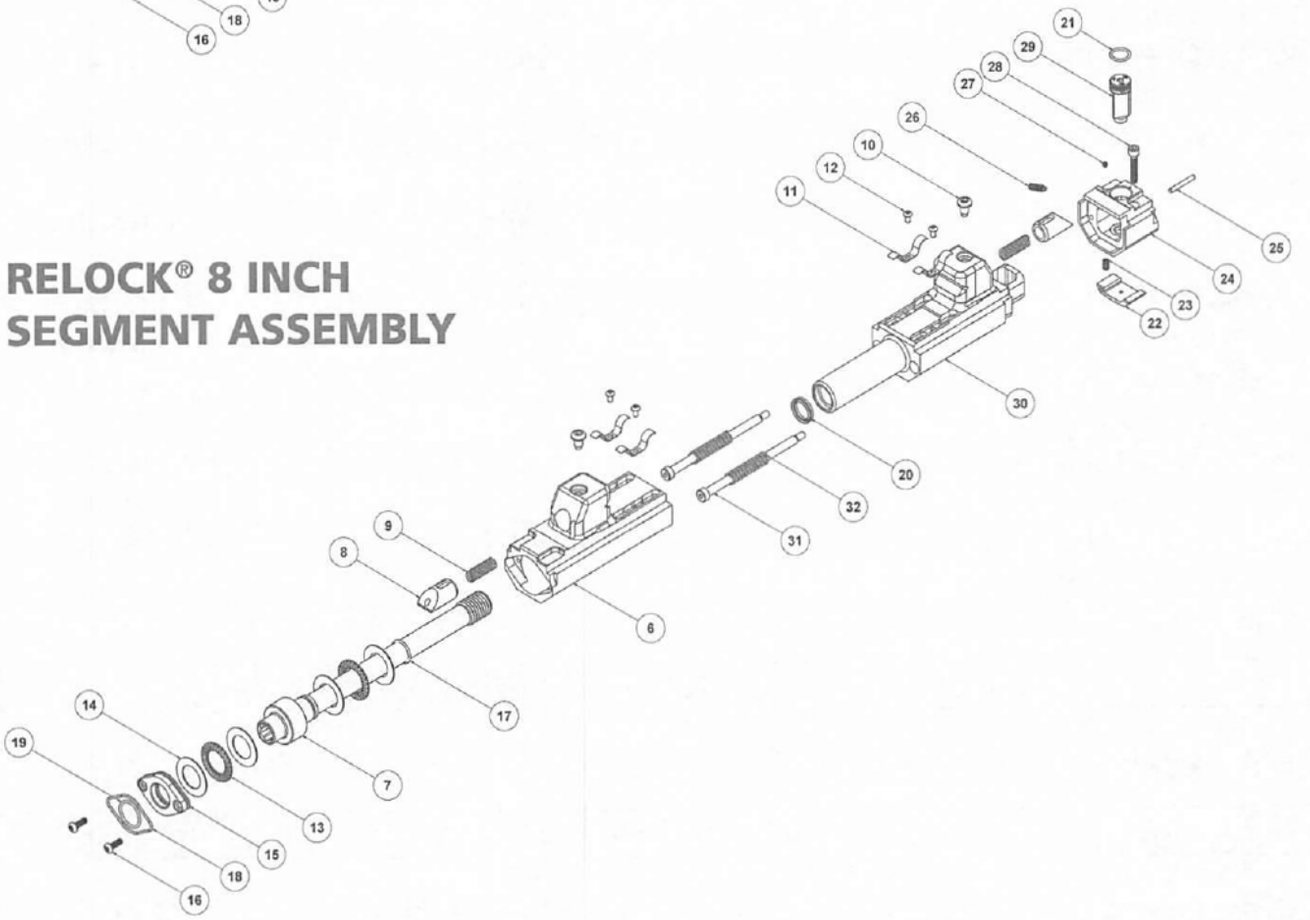

RELOCK - 4, 6, & 8 INCH SEGMENT ASSEMBLY PARTS LIST

#	Description	4" Vise	6" Vise	8" Vise
1	ReLock Rear Slide Segment	HWS4501	HWS6501	-
2	ReLock Brake Housing	HWS4570	HWS6570	-
3	ReLock Brake Spring	HWS4575	HWS4575	-
4	ReLock Shoulder Screw	43713	43713	-
5	ReLock Brake Set Screw	HWS4577	HWS6577	-
6	ReLock Front Slide Segment	RWS4500DI	RWS6500DI	RWS8500
7	ReLock Slide Segment Screw	RWS4502	RWS6502	RWS8502
8	ReLock Segment Latch Plunger	RWS4511	RWS6511	RWS8511
9	ReLock Plunger Compression Spring	RWS4512	RWS6512	RWS8512
10	ReLock Retaining Screw	RWS4513	RWS6513	RWS8513
11	ReLock Chip Shield Spring	RWS6514	RWS6514	RWS8514
12	ReLock Spring Screw	RWS6515	RWS6515	RWS8515
13	ReLock Thrust Bearing	RWS4516	RWS6516	RWS8516
14	ReLock Thrust Washer	RWS4517	RWS6517	RWS8517
15	ReLock Screw Retainer Plate	RWS4518	RWS6518	RWS8518
16	ReLock Plate Screw	RWS4519	RWS6519	RWS8519
17	ReLock Screw O-Ring Seal	RWS6509	RWS6520	RWS6526
18	ReLock Plate O-Ring Seal - Small	RWS4526	RWS6526	RWS4527
19	ReLock Plate O-Ring Seal - Large	RWS4527	RWS6527	RWS8527
20	ReLock U-Seal	RWS4530	RWS6530	RWS8530
21	ReLock Offset Dial O-Ring	-	-	RWS8509
22	ReLock Brake Spring	-	-	RWS8506
23	ReLock Brake Compression Spring	-	-	RWS8508
24	ReLock Brake Housing	-	-	RWS8503
25	ReLock Brake Spring Dowel Pin	-	-	RWS8507
26	ReLock Brake Dial Spring Plunger	-	-	57021X
27	ReLock Brake Screw	-	-	RWS8531
28	ReLock Brake Spring Screw	-	-	RWS8510
29	ReLock Auto Offset Dial	-	-	RWS8504
30	ReLock Rear Slide Segment	-	-	RWS8501
31	ReLock Shoulder Screw	-	-	RWS8528
32	ReLock Compression Spring	-	-	RWS8529

RELOCK - 4, 6, & 8 INCH SEGMENT ASSEMBLY

-	ReLock 4 & 6 Inch Segment Assembly (Items 1-20)	RWS4569	RWS6569	-
-	ReLock 8 Inch Segment Assembly (Items 6-32)	-	-	RWS8560

RELOCK 4, 6, & 8 INCH SEAL KITS

-	ReLock 4 & 6 Inch Seal Kits (Items 17-20)	SRK4001	SRK6001	-
-	ReLock 8 Inch Seal Kits (Items 17-21)	-	-	SRK8000

ANGIC Get quote
Angic Global Solutions 1-888-872-0690
https://www.AngicGlobal.com Sales@AngicGlobal.com

RELOCK-2 EXPLODED VIEW

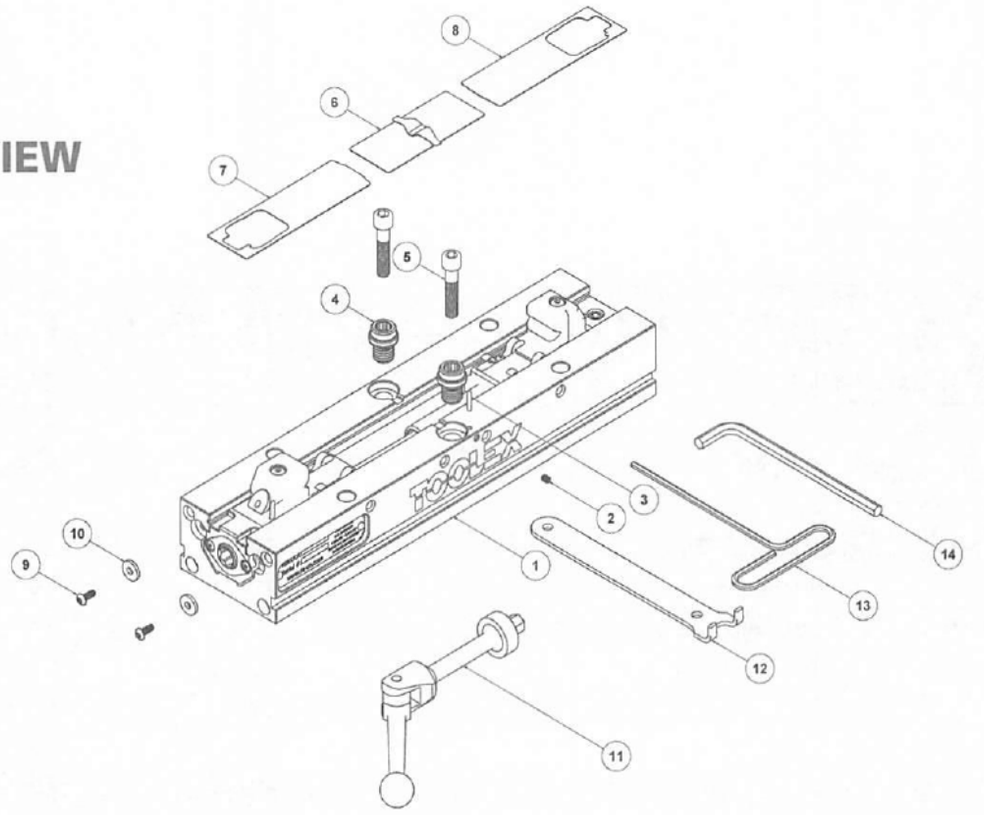

RELOCK-8 EXPLODED VIEW

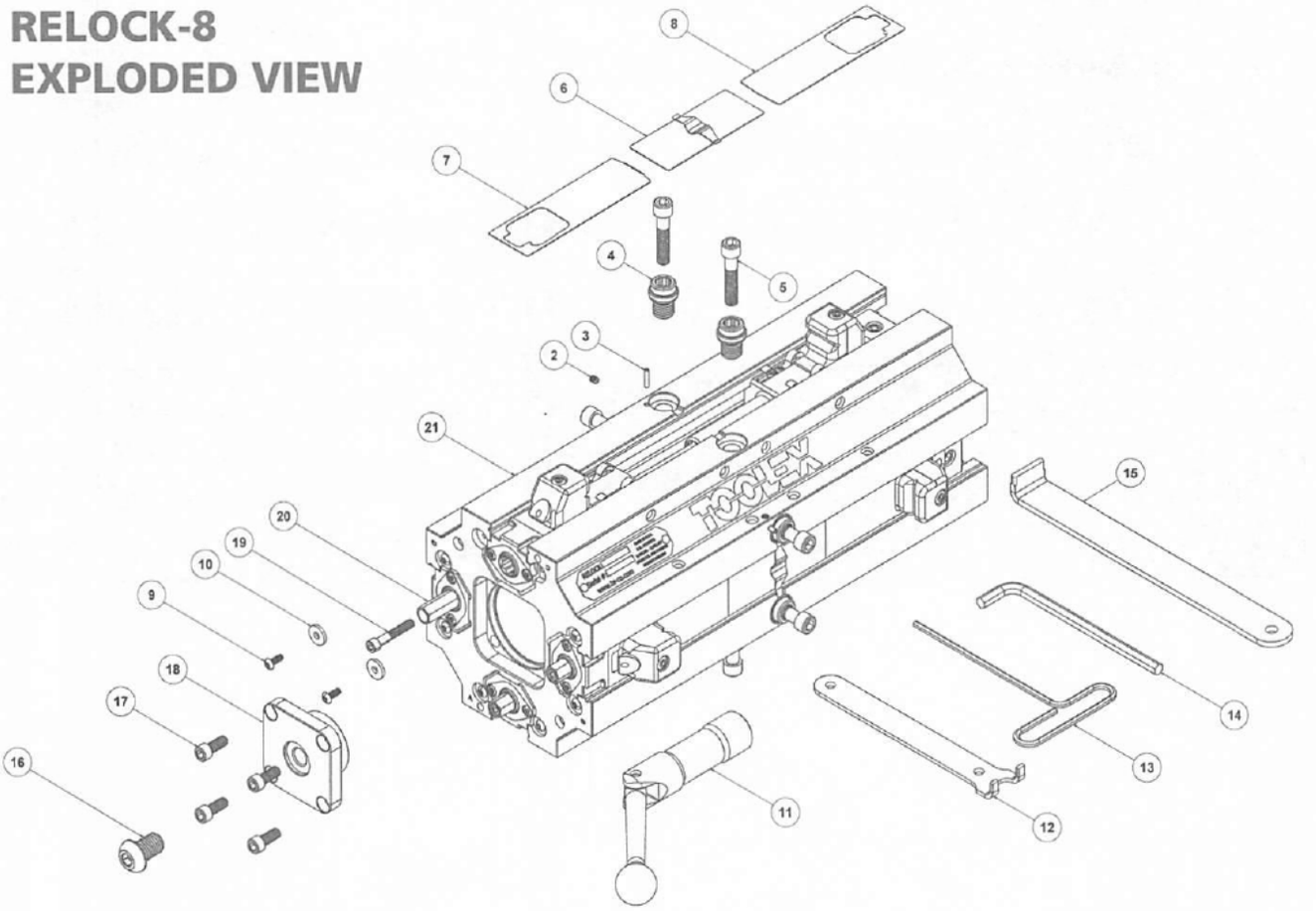

ANGIC GLOBAL SOLUTIONS
Get quote
Angic Global Solutions 1-888-872-0690
https://www.AngicGlobal.com Sales@AngicGlobal.com

RELOCK 2-STATION, 8-STATION VISE PARTS LIST				
#	Description	4" Vise	6" Vise	8" Vise
1	Relock 2-Station Vise Body	RWS4543	RWS6543	RWS8543
2	ReLock Set Screw	RWS4533	RWS6533	RWS8533
3	ReLock Dowel Pin	RWS4534	RWS6534	RWS8534
4	ReLock Jaw Locating Stud	RWS4532	RWS6532	RWS8532
5	ReLock Center Jaw Socket Head Cap Screw	RWS4550	RWS6550	RWS8010
6	ReLock Center Chip Shield	RWS4523	RWS6523	RWS8523
7	ReLock Rear Chip Shield	RWS4524	RWS6524	RWS8524
8	ReLock Front Chip Shield	RWS4525	RWS6525	RWS8525
9	ReLock Stop Button	RWS4521	RWS6521	RWS8521
10	ReLock Button Screw	RWS4522	RWS6519	RWS8522
11	ReLock Handle Assembly	RWS4566	RWS6566	RWS8562
12	ReLock Chip Shiel Wrench	RWS4540	RWS6540	RWS8545
13	T-Handle Hex Wrench	33884	33880	RWS8570
14	L-Style Hex Wrench	RWS4541	RWS6541	RWS8541
15	ReLock Pry Wrench	-	-	RWS8540
16	ReLock Button Head Cap Screw	RWS6548	RWS6548	RWS6548
17	ReLock ReLock Socket Head Cap Screw	84800	84804	RWS8547
18	ReLock Quad End Plate	RWS4546	RWS6546	RWS8546
19	ReLock Hex Drive Screw	RWS4539	84803	RWS8539
20	Relock Hex Drive	RWS4537	RWS6537	RWS8537
21	ReLock 8-Station Vise Body	RWS4544	RWS6544	RWS8544
RELOCK CHIP SHIELD ASSEMBLY				
-	ReLock Chip Shield Assembly (Items 6-8)	RWS4561	RWS6561	RWS8561
RELOCK TOOL KIT				
-	ReLock 4 & 6 Inch Tool Kit (Items 12-14)	RWS4563	RWS6563	-
-	ReLock 8 inch Tool Kit (Items 12-15)	-	-	RWS8563

ANGIC
Get quote
Angic Global Solutions 1-888-872-0690
https://www.AngicGlobal.com Sales@AngicGlobal.com

ACCUSNAP® PARTS LIST

AccuSnap Master Jaws

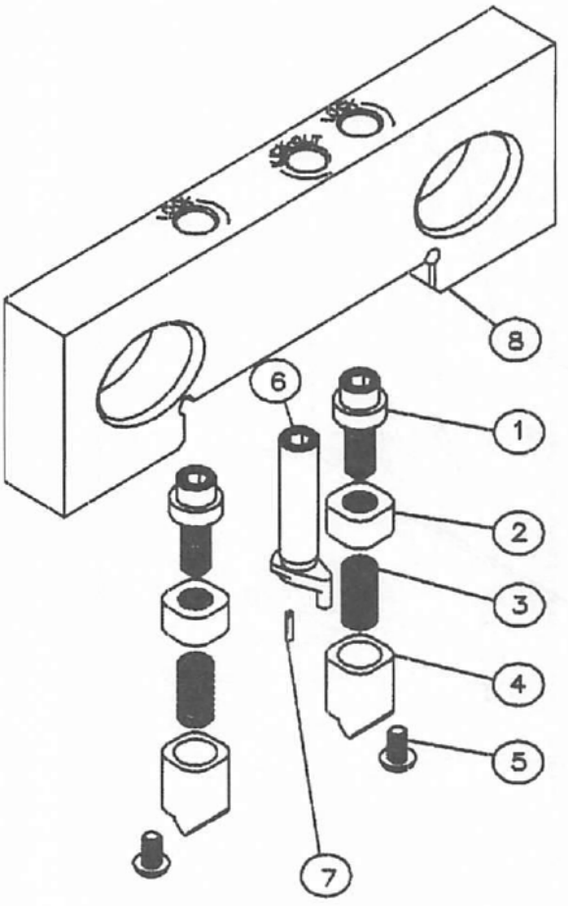

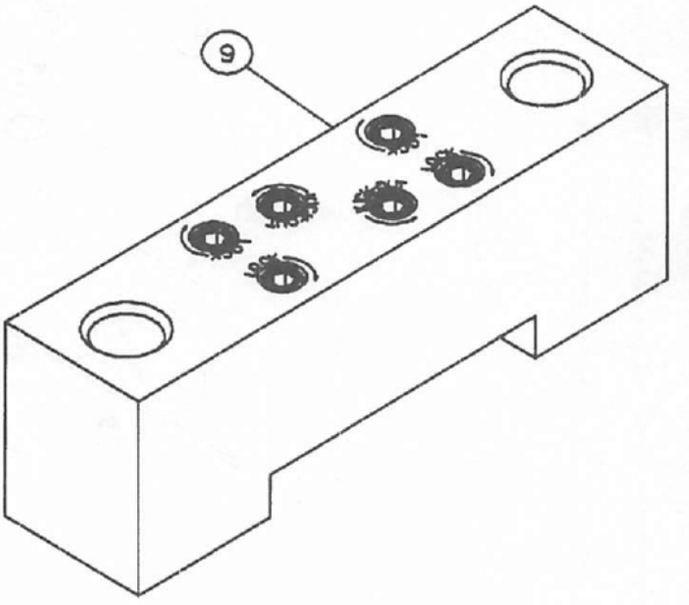

#	ACCUSNAP MASTER JAW PARTS LIST Description	4" Vise	6" Vise	8" Vise
1	AccuSnap Lock Screw	AMJ4500	AMJ6500	AMJ8500
2	AccuSnap Lock	AMJ4501	AMJ6501	AMJ8501
3	AccuSnap Spring	AMJ4502	AMJ6502	AMJ8502
4	AccuSnap Spring Plunger	AMJ4503	AMJ6503	AMJ8503
5	AccuSnap Cap Screw	AMJ4504	AMJ6504	AMJ8504
6	AccuSnap Kick Out Pawl	AMJ4505	AMJ6505	AMJ8505
7	AccuSnap Spring Pin	AMJ6506	AMJ6506*	SCJ6501
8	AccuSnap Plain Outside Jaw	AMJ4507	AMJ6507	AMJ8507
9	AccuSnap Plain Center Jaw	AMJ4508	AMJ6508	AMJ8508

*For 6" Center Jaw Order AccuSnap Spring Pin # SCJ6501

PARTS AVAILABLE INDIVIDUALLY OR IN REPAIR KITS

Qty.	ACCUSNAP REPAIR KITS Description	ARK4000 CONTAINS	ARK6000 CONTAINS	ARK8000 CONTAINS
2	AccuSnap Lock Screw	AMJ4500	AMJ6500	AMJ8500
2	AccuSnap Lock	AMJ4501	AMJ6501	AMJ8501
2	AccuSnap Spring	AMJ4502	AMJ6502	AMJ8502
2	AccuSnap Spring Plunger	AMJ4503	AMJ6503	AMJ8503
2	AccuSnap Cap Screw	AMJ4504	AMJ6504	AMJ8504
1	AccuSnap Kick Out Pawl	AMJ4505	AMJ6505	AMJ8505
1	AccuSnap Spring Pin	AMJ4506	AMJ6506	SCJ6501

ANGIC GLOBAL SOLUTIONS Get quote
Angic Global Solutions 1-888-872-0690
https://www.AngicGlobal.com Sales@AngicGlobal.com

QUICKCHANGE™ PARTS LIST

QuickChange Master Jaws

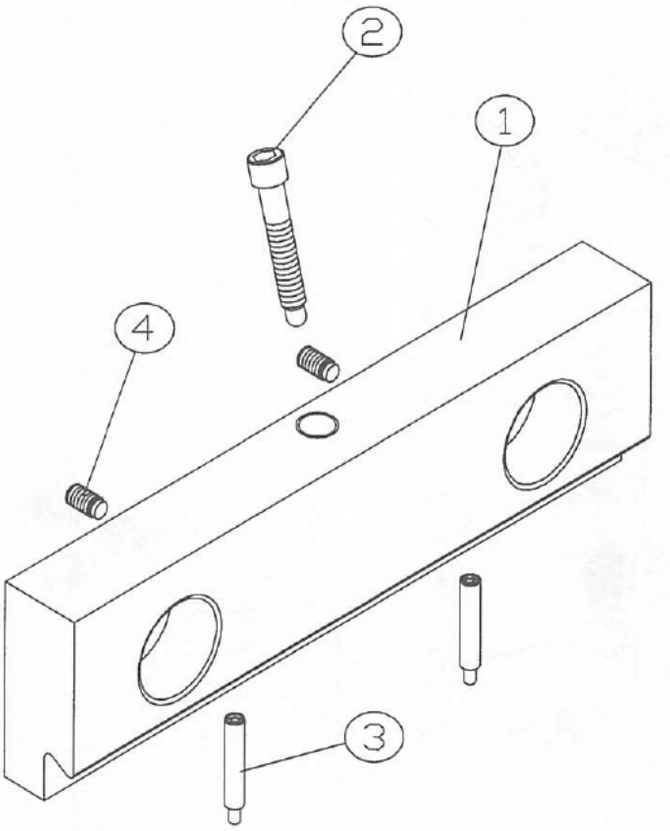

QUICKCHANGE MASTER JAW PARTS LIST				
#	Description	4" Vise	6" Vise	8" Vise
1	QuickChange Plain Master Jaw	QMJ4500	QMJ6500	QMJ8500
2	QuickChange Locking Screw	QMJ4501	QMJ6501	QMJ8501
3	QuickChange Plunger Assembly	QMJ6502	QMJ6502	QMJ6502
4	QuickChange Locking Screw	QMJ6503	QMJ6503	QMJ6503

Get quote
Angic Global Solutions 1-888-872-0690
https://www.AngicGlobal.com Sales@AngicGlobal.com

PWS-4600 - 4" Single Station Vise

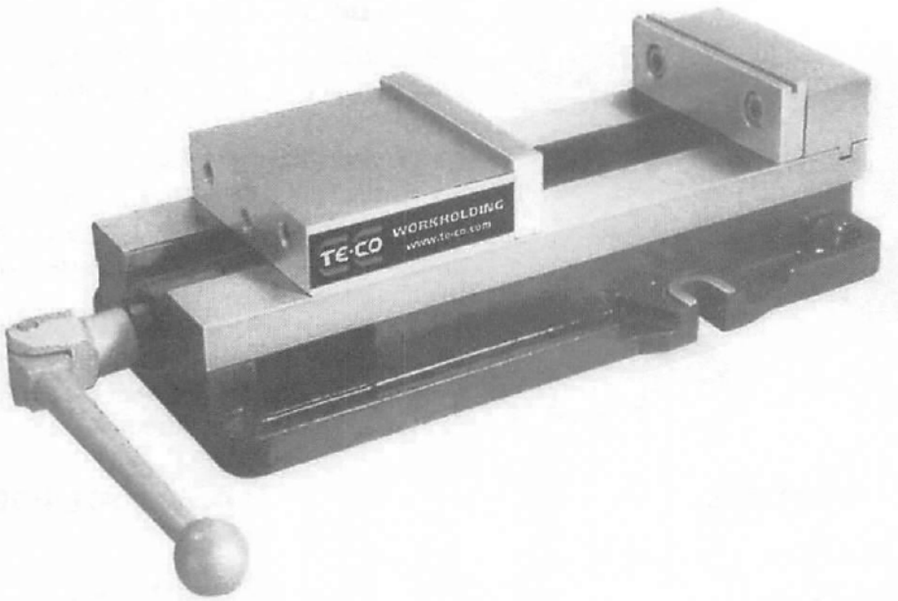

TOP VIEW

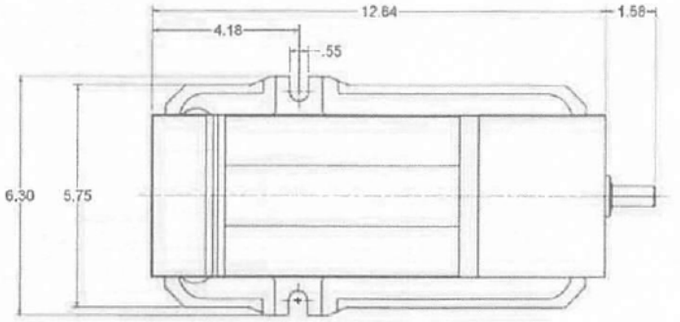

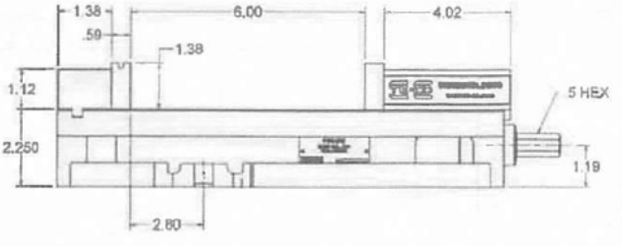

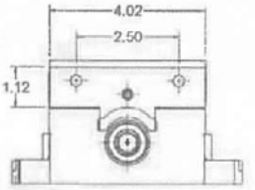

JAW PLATE POSITION

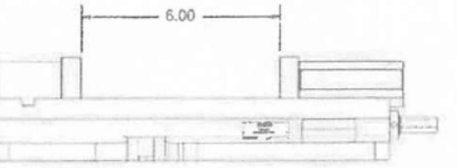

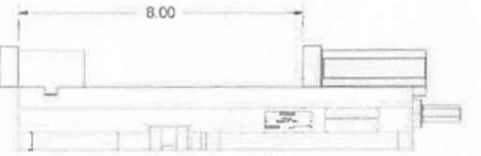

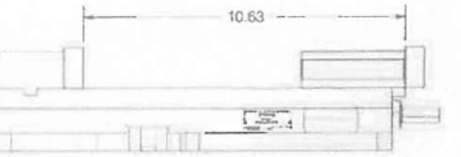

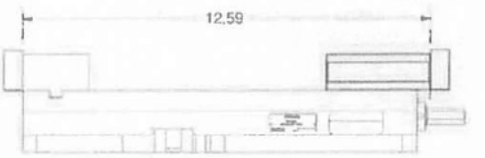

ANGIC GLOBAL SOLUTIONS
Get quote
332-1274 • ww
Angic Global Solutions 1-888-872-0690
https://www.AngicGlobal.com Sales@AngicGlobal.com

PWS-6900 - 6" Single Station Vise



Features:

- Up to 8,200 lbs. of clamping force
- Bed height matched to size 2.875" (73.025mm) +/- 0.0005"
- Repeatability within 0.001"
- Hardened vise bed and jaw plates.
- Outside rail edges of the body are machined.
- Sealed bearing system reduces clamping pressure and increases bearing life.
- Stationary jaw has machined keyway for alignment of the vise and includes alignment rail for quick setup.
- Footprint and distance from keyway to stationary jaw same as major competitor.

TOP VIEW

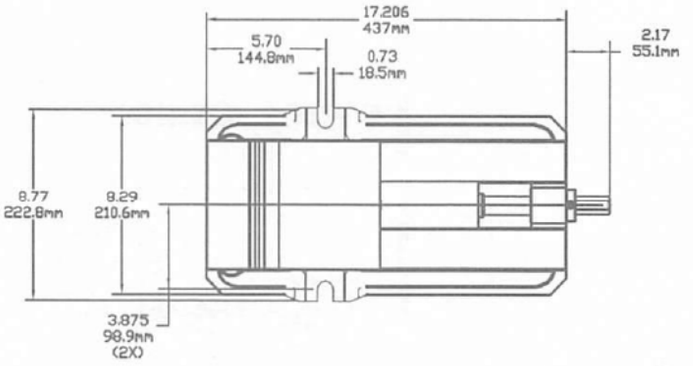

SIDE VIEW

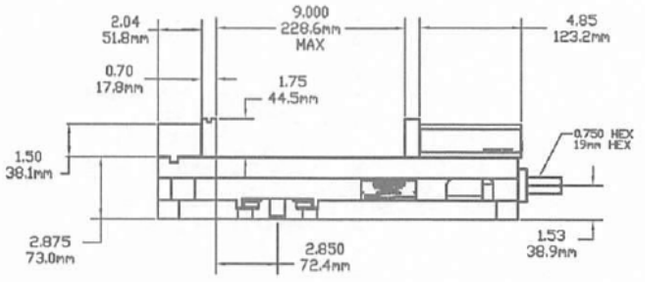

FRONT VIEW

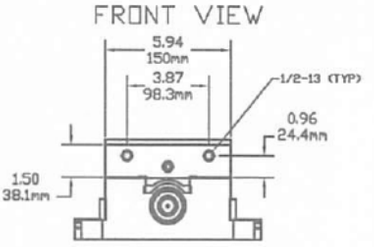

JAW PLATE POSITION

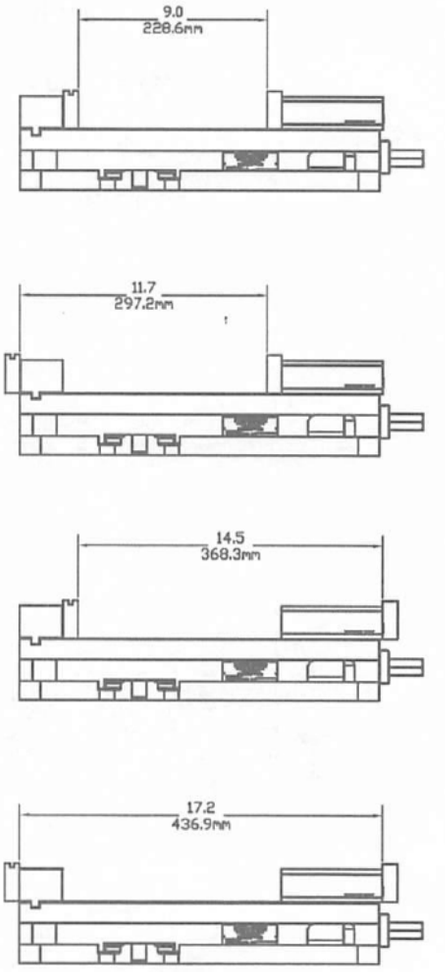

Vise Keys

Vise Size	Part Number	Thread Size
6"	PWS-6900-20	11/16 x 1/2
6"	PWS-6900-21	11/16 x 9/16
6"	PWS-6900-22	11/16 x 5/8
6"	44504	11/16 x 11/16
6"	PWS-6900-23	11/16 x 18MM
6"	PWS-6900-24	11/16 x 3/4
6"	PWS-6900-24	11/16 x 13/16

ANGIC GLOBAL SOLUTIONS
Get quote
Angic Global Solutions 1-888-872-0690
https://www.AngicGlobal.com Sales@AngicGlobal.com

PWS-8110 - 8" Single Station Vise



Features:

- Powder coated paint resists flaking and peeling
- 80,000psi ductile iron body with increased nickel content for improved corrosion resistance
- Hardened vise bed and jaw plates
- Sealed and lubricated needle roller thrust bearing for maximum life and minimum torque
- Up to 12,000lbs. (53,379N) of clamping force
- Repeatability within .001" (0.025mm)
- Outside rails of body are machined within 0.0005" (.013mm) square to jaw
- Bed height matched to size 3.310" +/- 0.0005" (84.07mm +/- .013mm)
- Footprint and distance from the keyway to stationary jaw meets industry standard

JAW PLATE POSITION

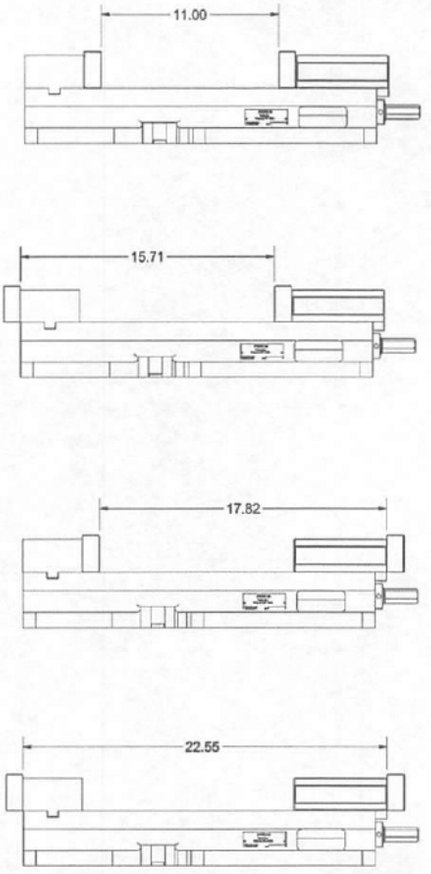

TOP VIEW

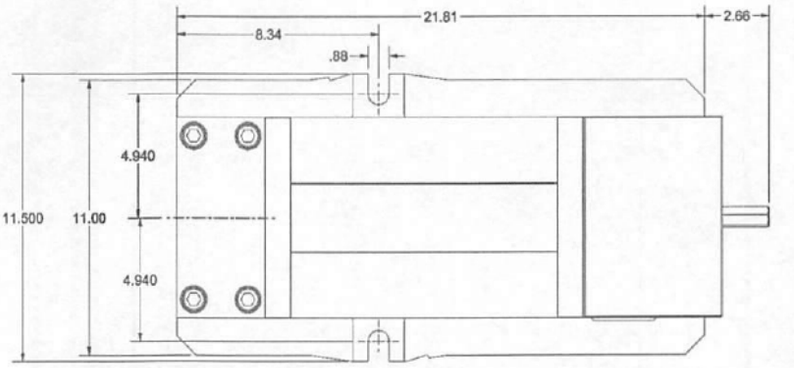

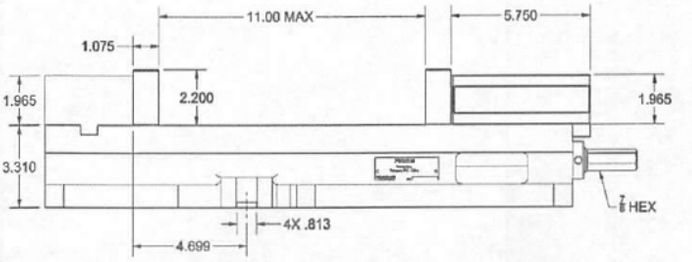

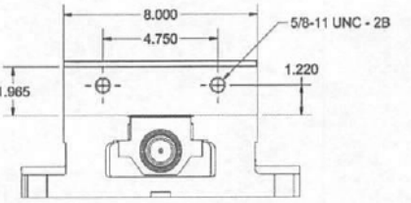

Vise Keys

Vise Size	Part Number	Slot Size
8"	PWS-8100-20	11/16
8"	PWS-8100-21	18MM
6"	PWS-8100-22	3/4
6"	PWS-8100-23	7/8

Get quote
Angic Global Solutions 1-888-872-0690
https://www.AngicGlobal.com Sales@AngicGlobal.com

Hydraulic Quad Vise

TOOLEX®
VISE WORKHOLDING TECHNOLOGY

with self-contained hydraulic screw pumps

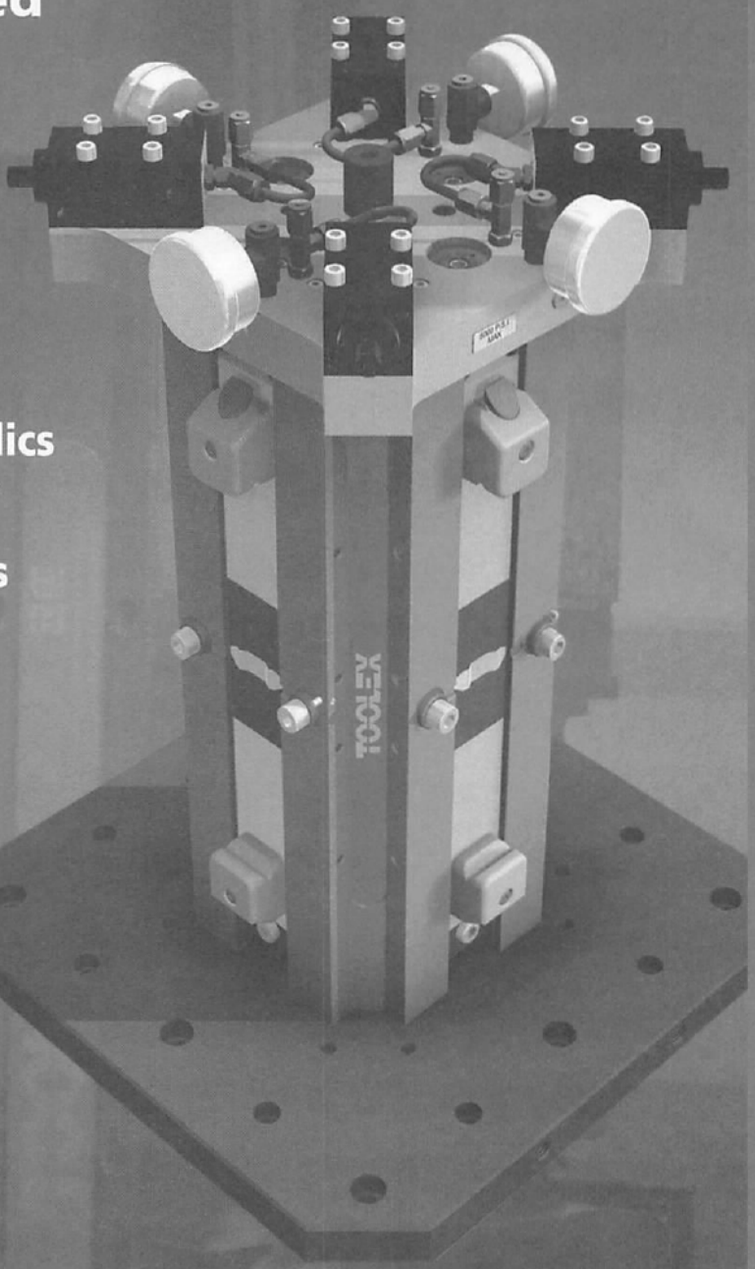

- **Consistent, controlled clamping pressure**
  Monitoring gages included
- **Self-contained hydraulics**
  No external components necessary
- **Accepts all Toolex jaws and accessories**
- **Less torque required to clamp workpiece**
- **Ergonomic design**
  Reduces user fatigue

MADE IN THE USA

TE·CO

ANGIC GLOBAL SOLUTIONS
Get quote
2-1274 • www
Angic Global Solutions 1-888-872-0690
https://www.AngicGlobal.com Sales@AngicGlobal.com

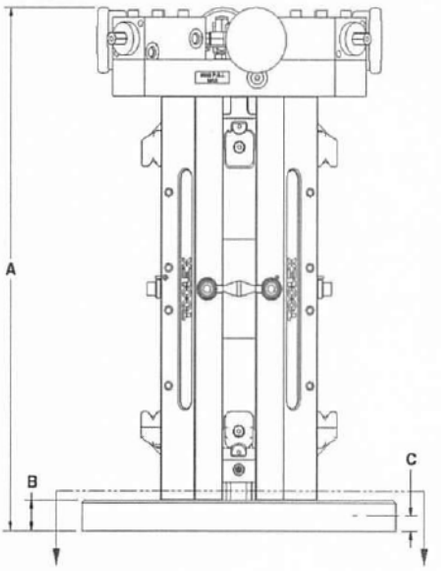

Vise only

Vise Size	Part Number	A	B	C
4"	HWS4SC8	21.60	1.15	.41
6"	HWS6SC8	26.32	1.40	.709

4-inch vise also available with a 400mm baseplate. Contact TE-CO for details.

Vise with Aluminum Machinable Jaws

Vise Size	Part Number	
4"	HWS4SC8SJ	Includes 4-sets SSJ4000 Machinable Aluminum Soft Jaws
6"	HWS6SC8SJ	Includes 4-sets SSJ6000 Machinable Aluminum Soft Jaws

Vise with Carrier Jaws and Hard Jaws

Vise Size	Part Number	
4"	HWS4SC8HJ	Includes 4-sets SCJ4000 Carriers Jaws & 4 sets SHJ4035 Hard Jaws
6"	HWS6SC8HJ	Includes 4-sets SCJ6000 Carriers Jaws & 4 sets SHJ6035 Hard Jaws

4-inch Base Plate

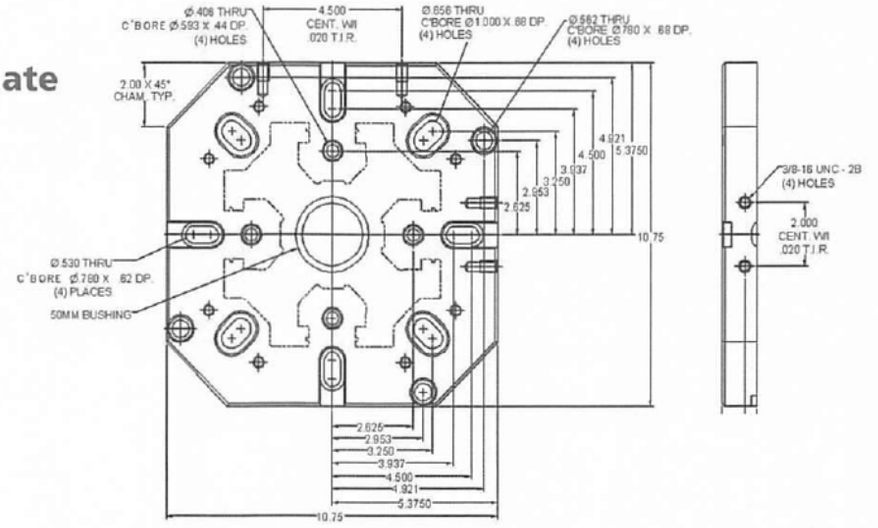

6-inch Base Plate

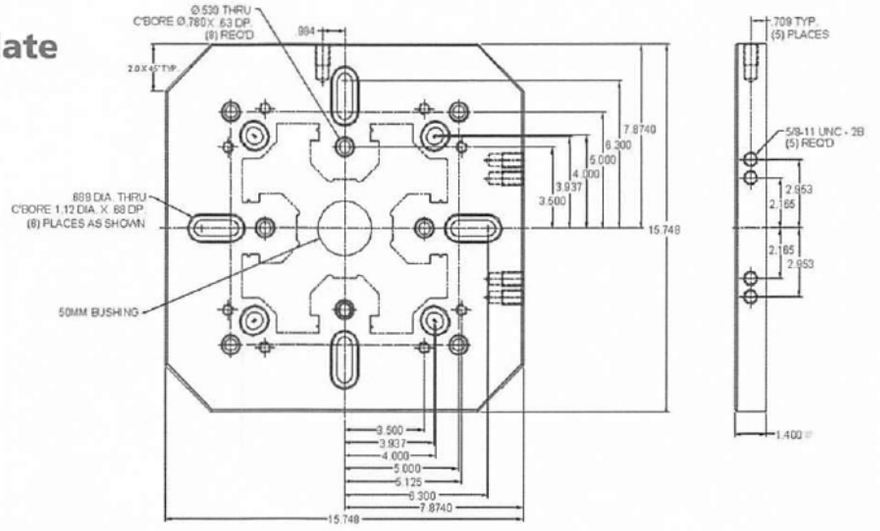

Get quote
32-1274 • ww
Angic Global Solutions 1-888-872-0690
https://www.AngicGlobal.com Sales@AngicGlobal.com

NOTES

Get quote
Angic Global Solutions 1-888-872-0690
https://www.AngicGlobal.com Sales@AngicGlobal.com

COLUMNS & PLATES

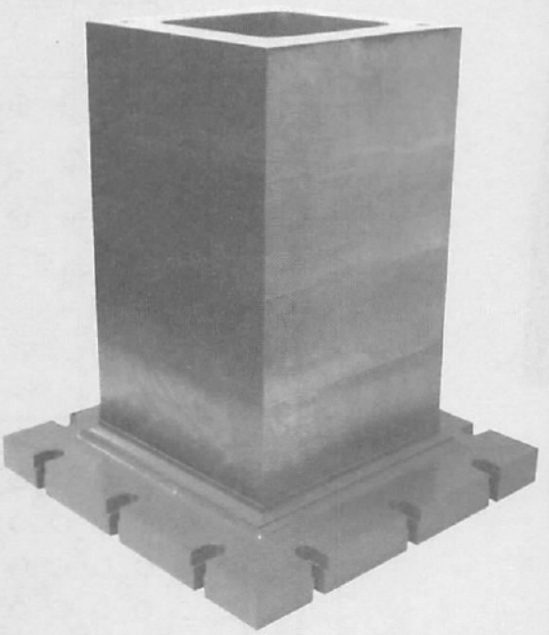

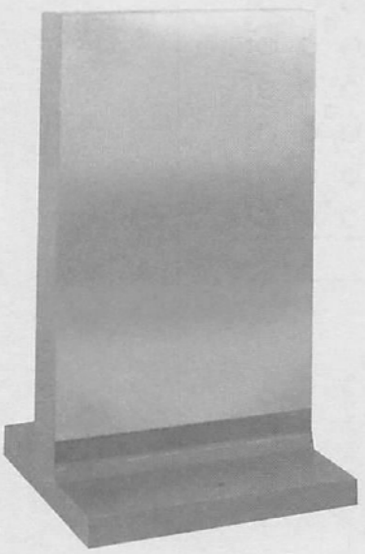

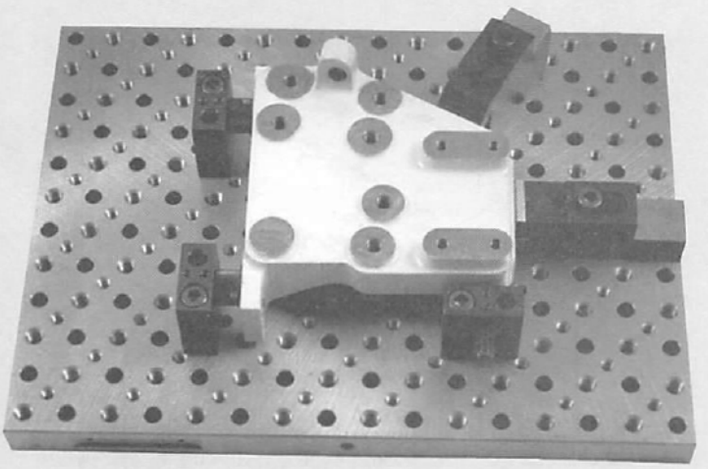

Fixture Plates.....206

Columns.....210

T-Columns.....211

Get quote

Angic Global Solutions 1-888-872-0690
https://www.AngicGlobal.com Sales@AngicGlobal.com

Fixture Plates

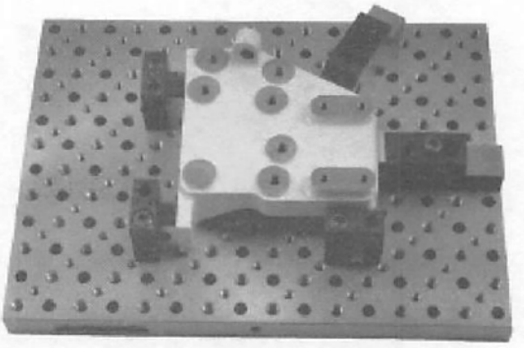

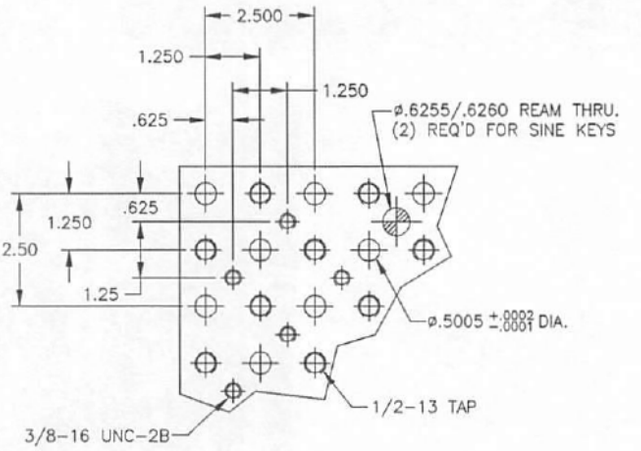

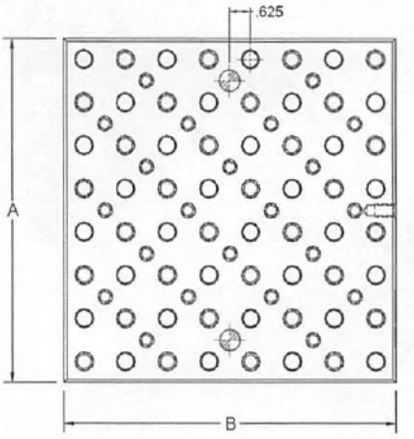

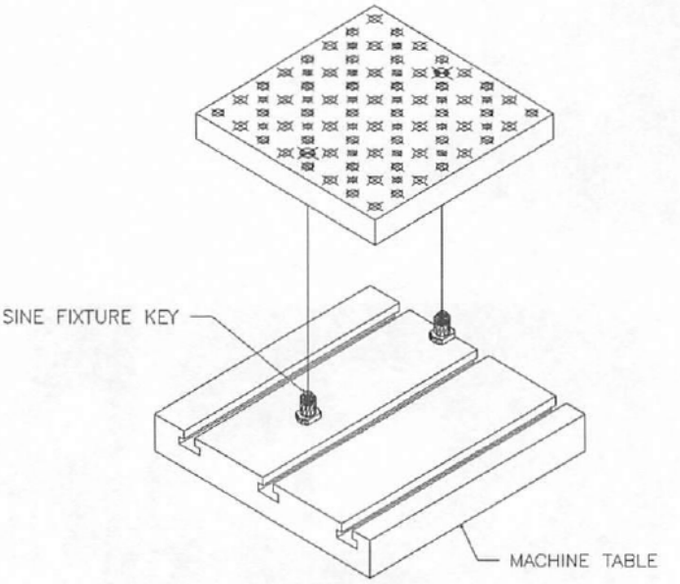

- Extensive tapped dowel pin hole configuration provides the flexibility to accurately and quickly fixture practically any workpiece or mount any vise.
- Fixture plates consist of alternating 1/2" dowel pin holes for workpiece location, along with 1/2" and 3/8" tapped holes for clamping.
- Can be accurately located on machine tables by utilizing two reamed 5/8" centerline sine key holes.
- Non-standard sizes and mounting configurations are available and will be quoted upon request – otherwise, mounting holes must me added by the customer.
- TE-CO supports these products with a full line of tooling components for your fixturing needs (pages 2-70).
- Hoist rings are also available for proper material handling (pages 139-159).

Material Tolerances:

- C1119 Steel or equivalent
- Blanchard ground flat and parallel to .002 in 12"
- Tapped holes on location ±.005
- Dowel holes on location ±.001
- All plates are 1.2" thick

Part No.	A	B	Approx. Weight
25020	10	10	34 lbs.
25021	15	10	51 lbs.
25022	20	15	102 lbs.
25023	20	20	136 lbs.

Get quote
Angic Global Solutions 1-888-872-0690
https://www.AngicGlobal.com Sales@AngicGlobal.com

Columns

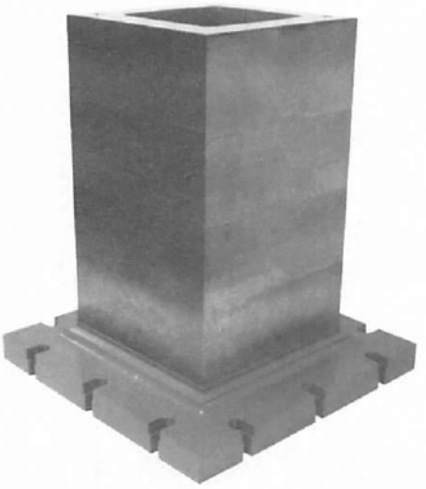

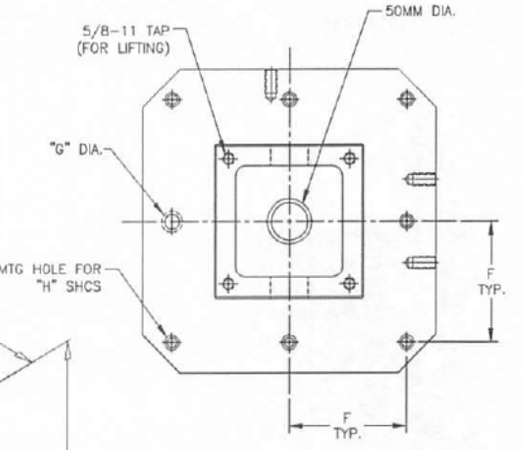

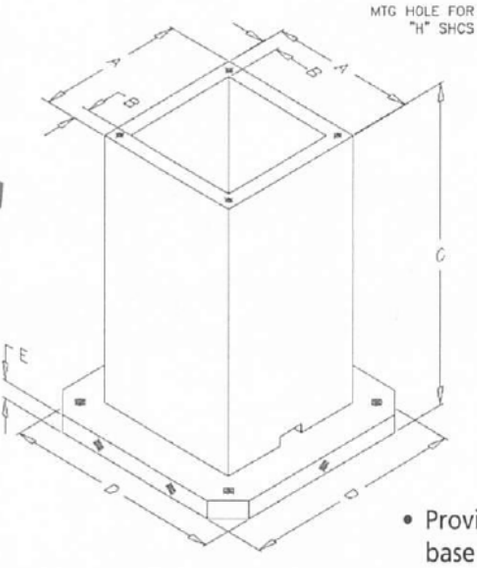

English

Part No.	A	B	C	D	E	F	G	H	Approx. Weight
25311	6.00	1.12	18.00	12.60	1.50	4.96	20mm	1/2" or M12	170 lbs.
25300	8.00	1.12	21.50	15.70	1.75	6.30	20mm	1/2" or M12	330 lbs.
25301	10.00	1.12	25.50	15.70	1.75	6.30	20mm	1/2" or M12	430 lbs.
25302	8.00	1.12	21.75	19.70	2.00	7.87	20mm	1/2" or M12	430 lbs.
25303	10.00	1.12	25.75	19.70	2.00	7.87	20mm	1/2" or M12	530 lbs
25304	12.00	1.25	31.75	19.70	2.00	7.87	20mm	1/2" or M12	725 lbs.
25305	14.00	1.25	31.75	19.70	2.00	7.87	20mm	1/2" or M12	810 lbs.
25306	8.00	1.12	22.00	24.80	2.25	9.84	25mm	5/8" or M16	610 lbs.
25307	10.00	1.12	26.00	24.80	2.25	9.84	25mm	5/8" or M16	710 lbs.
25308	12.00	1.25	32.00	24.80	2.25	9.84	25mm	5/8" or M16	900 lbs.
25309	14.00	1.25	32.00	24.80	2.25	9.84	25mm	5/8" or M16	1000 lbs.
25310	16.00	1.50	32.00	24.80	2.25	9.84	25mm	5/8' or M16	1175 lbs.

Metric

Part No.	A	B	C	D	E	F	G	H	Approx. Weight
65300	200	27	550	400	45	160	20mm	M12 or 1/2"	330 lbs.
65301	250	27	650	400	45	160	20mm	M12 or 1/2"	430 lbs.
65302	200	27	555	500	50	200	20mm	M12 or 1/2"	430 lbs.
65303	250	27	655	500	50	200	20mm	M12 or 1/2"	530 lbs
65304	300	30	805	500	50	200	20mm	M12 or 1/2"	725 lbs.
65305	350	30	805	500	50	200	20mm	M12 or 1/2"	810 lbs.
65306	200	27	560	630	55	250	25mm	M16 or 5/8"	610 lbs.
65307	250	27	660	630	55	250	25mm	M16 or 5/8"	710 lbs.
65308	300	30	810	630	55	250	25mm	M16 or 5/8"	900 lbs.
65309	350	30	810	630	55	250	25mm	M16 or 5/8"	1000 lbs.
65310	400	35	810	630	55	250	25mm	M16 or 5/8"	1175 lbs.

- Provides an accurate fixturing base for workpieces on horizontal and multi-axis machining centers.
- Provide a locating and mounting base for fixture plates.
- Material: One-piece stress relieved class 40 Meehanite cast iron or equivalent.
- Base and sides are milled flat, parallel, and square to .001 in 12".
- Columns are provided with the standard DIN and JIS mounting configuration and coolant drain holes.
- Columns are plain, without a grid pattern or holes, on all four sides.
- Grid patterns, non-standard mounting configurations, and special sizes are available and will will be quoted upon request.
- TE-CO supports these products with a full line of tooling components for your fixturing needs (pages 2-70).
- Hoist rings are also available for proper material handling (pages 121-132).

ANGIC GLOBAL SOLUTIONS
Get quote
32-1274 • ww
Angic Global Solutions 1-888-872-0690
https://www.AngicGlobal.com Sales@AngicGlobal.com

COLUMNS & PLATES

T-Columns

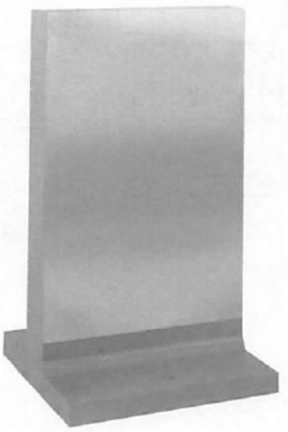

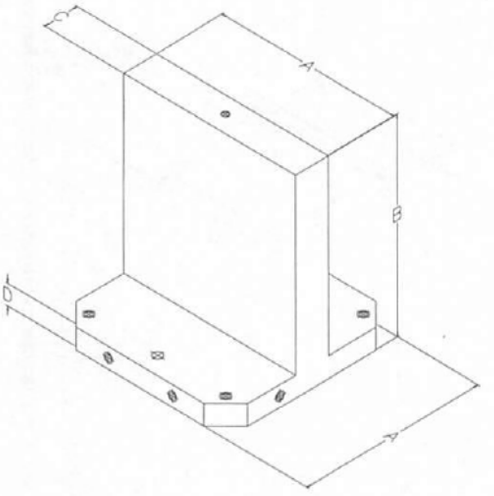

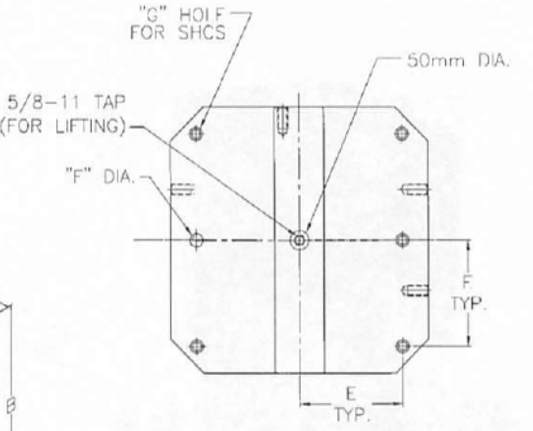

English

Part No.	A	B	C	D	E	F	G	Approx. Weight
25400	15.70	18.00	3.00	1.75	6.30	20mm	1/2" or M12	370 lbs.
25401	15.70	24.00	4.00	1.75	6.30	20mm	1/2" or M12	550 lbs.
25402	19.70	18.00	2.00	2.00	7.87	20mm	1/2" or M12	438 lbs.
25403	19.70	24.00	4.00	2.00	7.87	20mm	1/2" or M12	750 lbs.
25404	19.70	30.00	6.00	2.00	7.87	20mm	1/2" or M12	1175 lbs
25405	24.80	24.00	4.00	2.25	9.84	25mm	5/8" or M16	1065 lbs.
25406	24.80	30.00	6.00	2.25	9.84	25mm	5/8" or M16	1595 lbs.
25407	12.60	15.50	3.00	1.50	4.96	20mm	3/8" or M10	225 lbs.

Metric

Part No.	A	B	C	D	E	F	G	Approx. Weight
65400	400	455	80	45	160	20mm	M12 or 1/2"	370 lbs.
65401	400	610	100	45	160	20mm	M12 or 1/2"	550 lbs.
65402	500	455	50	50	200	20mm	M12 or 1/2"	438 lbs.
65403	500	610	100	50	200	20mm	M12 or 1/2"	750 lbs
65404	500	760	150	50	200	20mm	M12 or 1/2"	1175 lbs.
65405	630	610	100	55	250	25mm	M16 or 5/8"	1065 lbs.
65406	630	760	150	55	250	25mm	M16 or 5/8"	1595 lbs.

- Provides an accurate fixturing base for workpieces on horizontal and multi-axis machining centers.
- Provide a locating and mounting base for fixture plates.
- Material: One-piece stress relieved class 40 Meehanite cast iron or equivalent.
- Base and upright thickness are milled flat, parallel, and square to .001 in 12".
- T-Columns are provided with the standard DIN and JIS mounting configuration.
- T-Columns are plain, without a grid pattern or holes, on all four sides.
- Grid patterns, non-standard mounting configurations, and special sizes are available and will be quoted upon request.
- TE-CO supports these products with a full line of tooling components for your fixturing needs (pages 2-70).
- Hoist rings are also available for proper material handling (see pages 121-132).

ANGIC
Get quote
32-1274 • ww
Angic Global Solutions 1-888-872-0690
https://www.AngicGlobal.com Sales@AngicGlobal.com

NOTES

ANGIC GLOBAL SOLUTIONS
Get quote
32-1274 • ww
Angic Global Solutions 1-888-872-0690
https://www.AngicGlobal.com Sales@AngicGlobal.com

NOTES

Get quote
Angic Global Solutions 1-888-872-0690
https://www.AngicGlobal.com Sales@AngicGlobal.com

Check out our interactive CAD drawing program

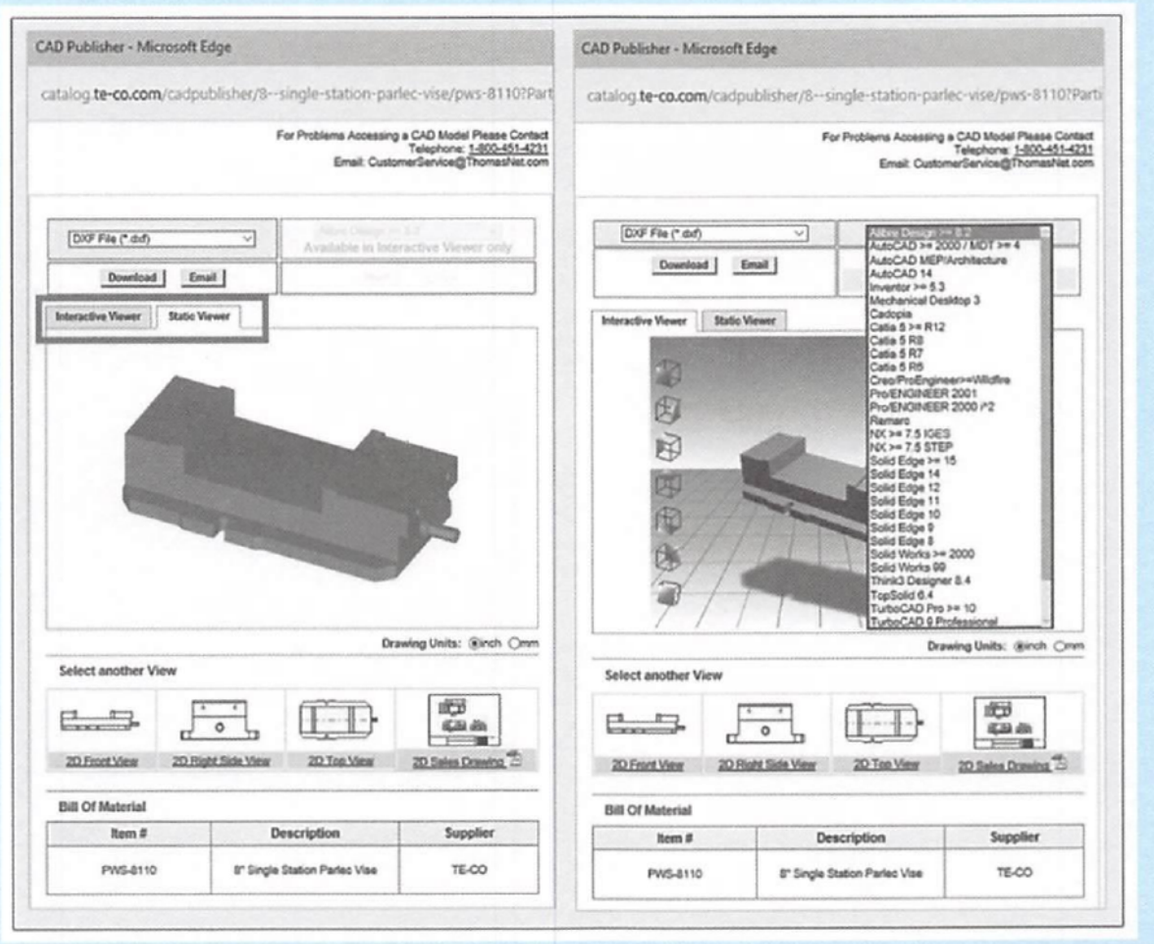

- Download 2D and 3D CAD models, drawings and detailed information of our products any time, in your preferred format
- Directly insert CAD models into 25+ industry standard CAD software programs
- Download or email sales drawings and submittals to colleagues
- View, pan, zoom, and rotate 3D drawings

www.te-co.com

ANGIC GLOBAL SOLUTIONS

Get quote

Angic Global Solutions 1-888-872-0690
https://www.AngicGlobal.com Sales@AngicGlobal.com

Represented by:

TE-CO®
WORKHOLDING

www.te-co.com

100 Quinter Farm Rd.
Union, OH 45322-9796
Toll Free: 800-543-4071
Fax: 937-832-1274

LIT

CERTIFIED ISO 001:2015

ANGIC GLOBAL SOLUTIONS
Get quote

Angic Global Solutions 1-888-872-0690
https://www.AngicGlobal.com Sales@AngicGlobal.com