Edition 28

NORTH AMERICAN VERSION

Richco®

Fastening Solutions

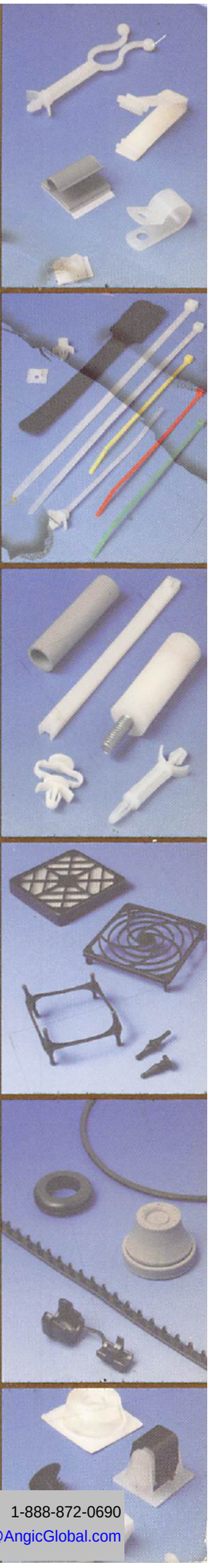

Global Presence. Local Support.

ANGIC GLOBAL SOLUTIONS
Get quote
Angic Global Solutions 1-888-872-0690
https://www.AngicGlobal.com Sales@AngicGlobal.com



Get quote

Angic Global Solutions 1-888-872-0690
https://www.AngicGlobal.com Sales@AngicGlobal.com

CONTENTS

Circuit Board Hardware 1-36

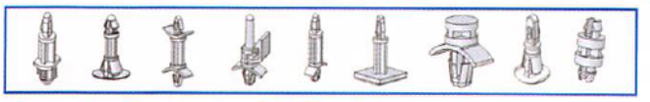

Snap-in, screw-mount & adhesive supports; spacers & stand-offs

Card Guides & Pullers 37-50



Vertical, horizontal & tensioning PC board rack card guides; pullers & ejectors

Rivets, Screws, Washers & Nuts 51-66



Snap-in, push, blind hole & unscrewing rivets; plastic screws, nuts & washers

Motion Control, Bumpers & Feet 67-82



Motion & vibration dampers; bumpers & feet

Fan Accessories 83-90

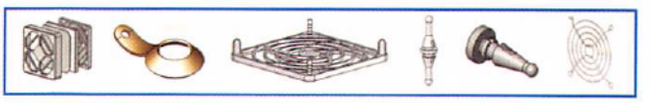

Screens, guards, filters, and other accessories for fans

LED Hardware 91-96

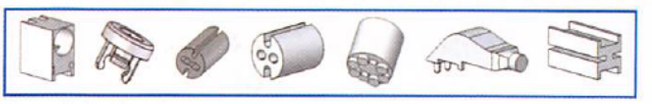

LED mounting and protection hardware; light pipes

Insulators 97-106

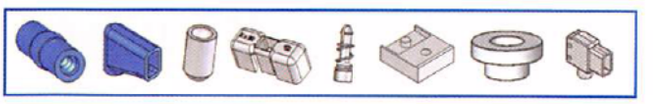

Fuse mounting hardware, transistor insulators, splashproof insulators

Cable Ties & Accessories 107-130

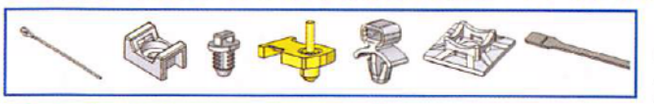

Standard, push mount, screw mount, releasable, hook & loop cable ties; tie holders

Cable Management 131-184

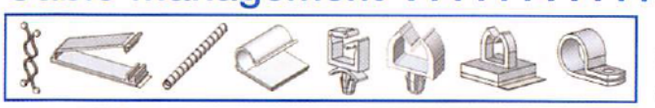

Clips, clamps, wire routing accessories; wraps & ducts

Fiber Management 185-214



Fiber routing and protection accessories

Grommets & Bushings 215-225



Metal & plastic grommeting strips & plug-in grommets; bushings

Thumbnail Index ..... II-IX
General Information X
Conversion Charts 226
RMS 227-234
Capabilities 236-237
Other Richco Literature 238-239
New Products Index 241
Alphabetical Index 242-245
Caster Capabilities 246

A B C D E F G H I J K

539-4060 Sam

Get quote

Angic Global Solutions 1-888-872-0690
https://www.AngicGlobal.com Sales@AngicGlobal.com

Circuit Board Hardware

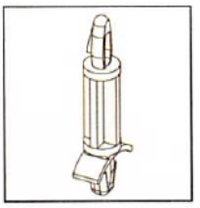
Pages 2-4

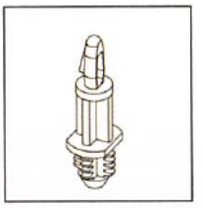
Pages 5, 8

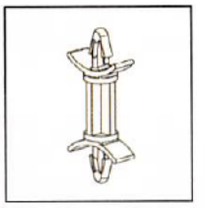
Page 6

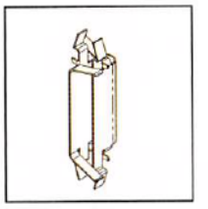
Page 7

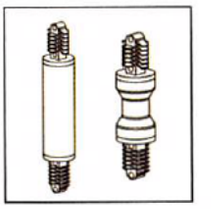
Pages 7, 71

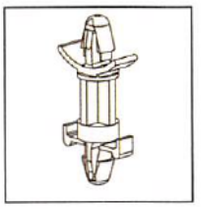
Page 8

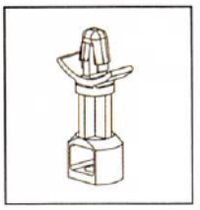
Pages 5, 8

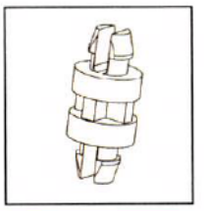
Pages 9, 11

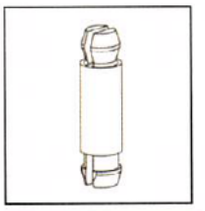
Page 10

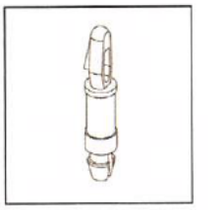
Page 11

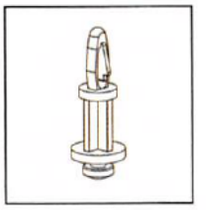
Pages 11, 21

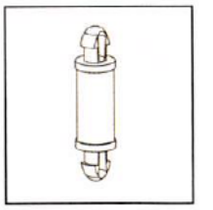
Page 12


Pages 12, 72

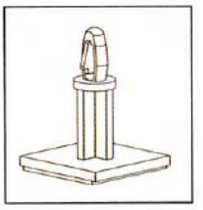
Page 13

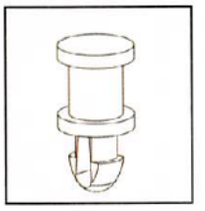
Page 14


Page 15

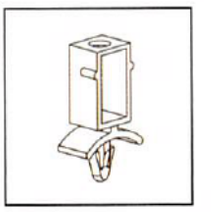
Page 15

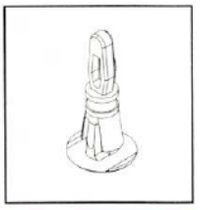
Pages 16, 17

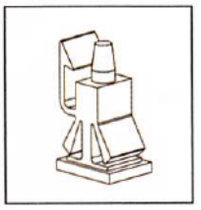
Page 18

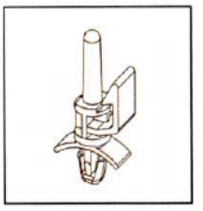
Pages 18-20

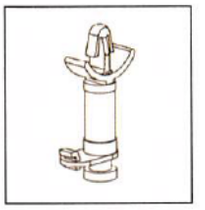
Page 21

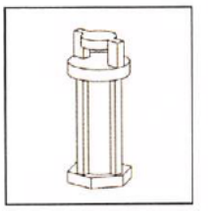
Page 22

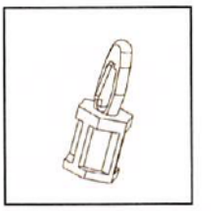
Pages 23, 24

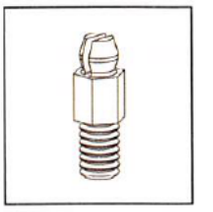
Page 24

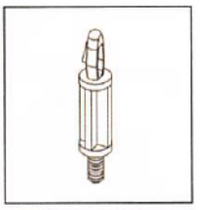
Pages 25, 26

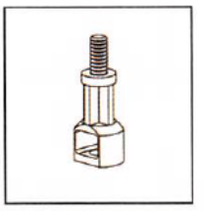
Page 25

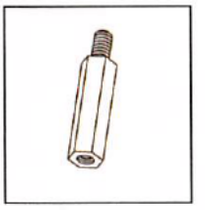
Page 27

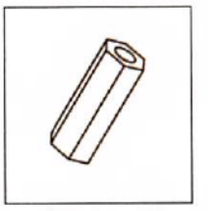
Pages 28, 29

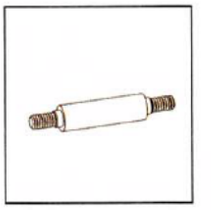
Pages 30, 31

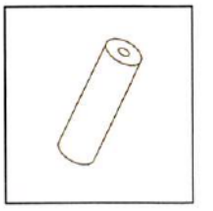
Pages 28, 32, 104


Page 33

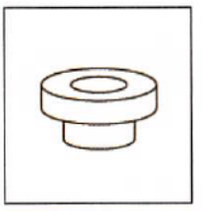
Pages 34, 104

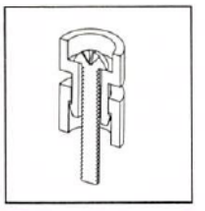
Page 35


Pages 35, 36

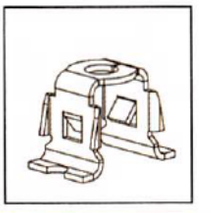
Page 36

-800-621-1892
Get quote
Angic Global Solutions 1-888-872-0690
https://www.AngicGlobal.com Sales@AngicGlobal.com

Card Guides & Pullers

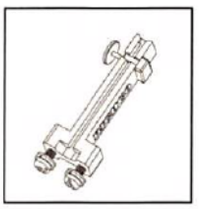

Pages 38, 39

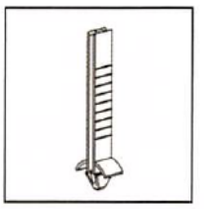

Pages 40-42

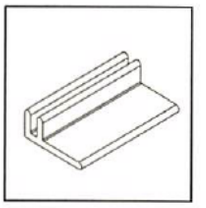

Page 43



Page 43

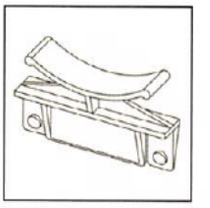

Page 47

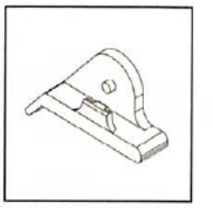

Pages 47-49

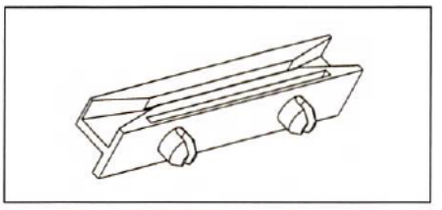

Page 43

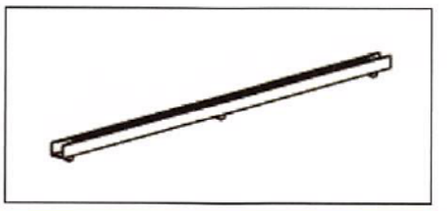

Pages 44-46

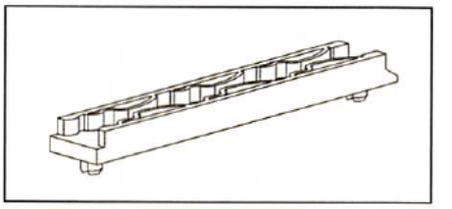

Page 45

Rivets, Screws, Washers & Nuts



Pages 52-54

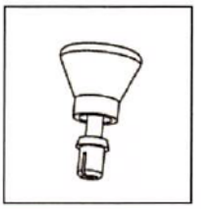

Page 54

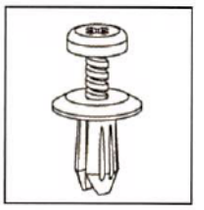

Page 55



Page 55

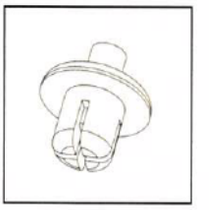

Pages 55, 56

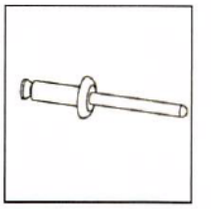

Page 56

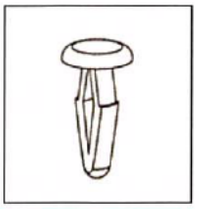

Page 57

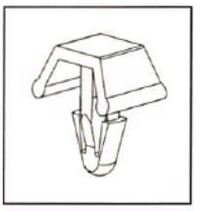

Page 57

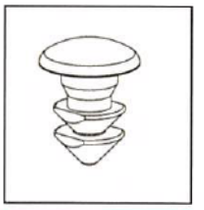

Page 58

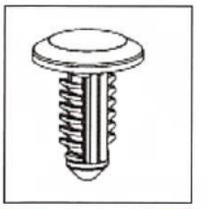

Pages 58. 59

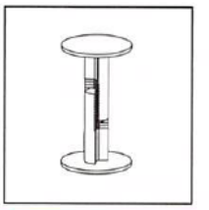

Page 60

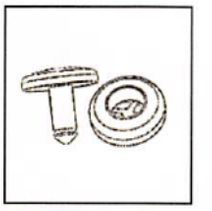

Page 60

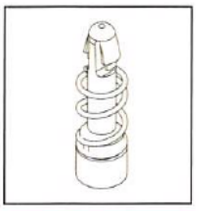

Pages 61, 99

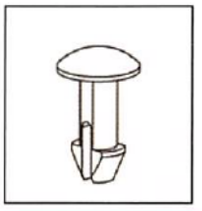

Page 61



Pages 62-64

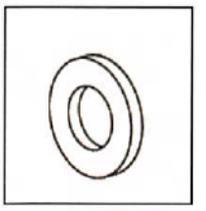

Page 64

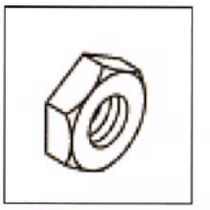

Page 65



Page 65

539-4060 Sam

Get quote

Angic Global Solutions 1-888-872-0690
https://www.AngicGlobal.com Sales@AngicGlobal.com

Motion Control, Bumpers & Feet

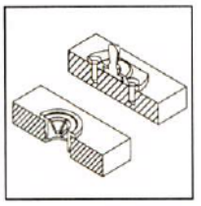
Page 68

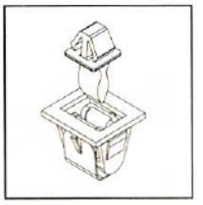
Page 69

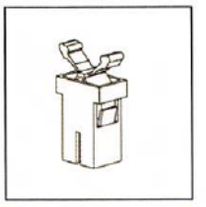
Page 69

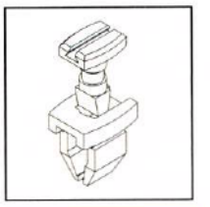
Page 70

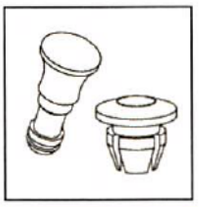
Page 70

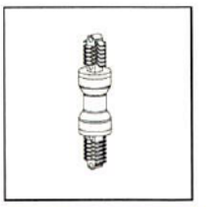
Page 71

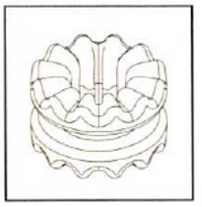
Page 72


Page 72

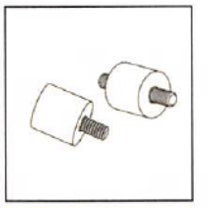
Page 73

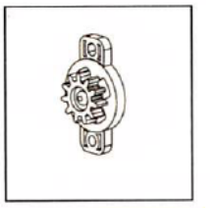
Pages 74-75

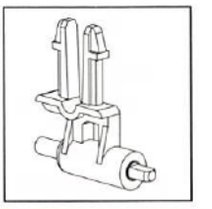
Page 75

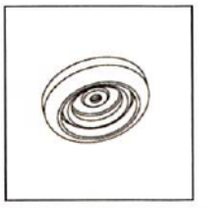
Pages 76, 77

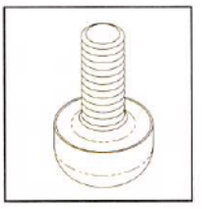
Page 77

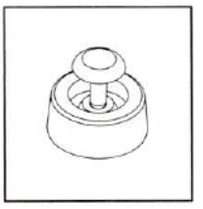
Pages 77, 78

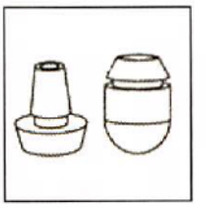
Page 79

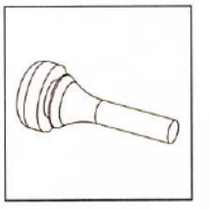
Page 79

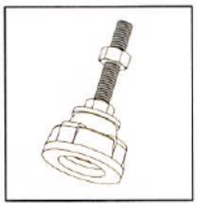
Page 80

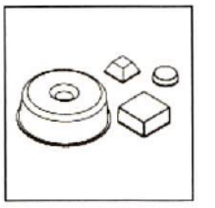
Pages 80, 81

Fan Accessories

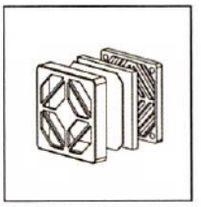
Page 85

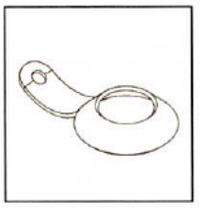
Page 85

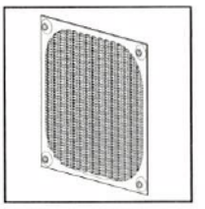
Page 86


Page 87

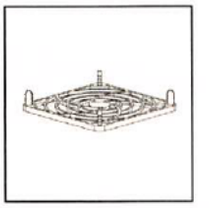
Page 88

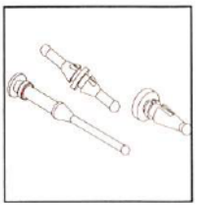
Pages 89-90

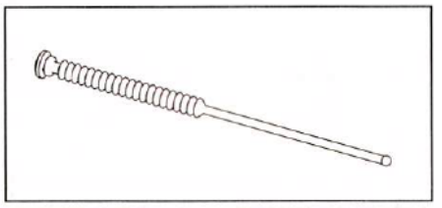
Page 88

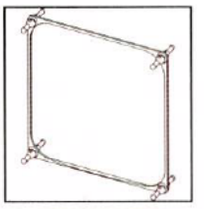
Page 89

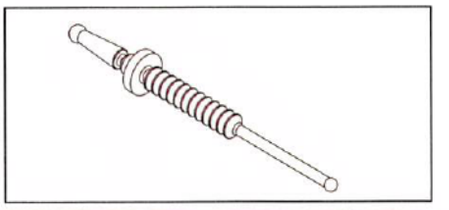
Page 90

-800-621-1892

Get quote

Angic Global Solutions 1-888-872-0690
https://www.AngicGlobal.com Sales@AngicGlobal.com

LED Hardware



Pages 92-94

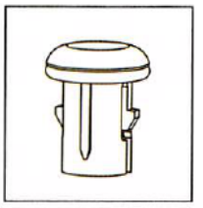

Page 94

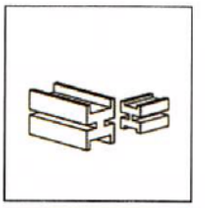

Page 93

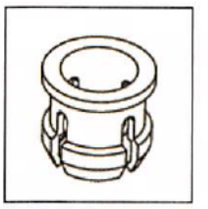

Page 95

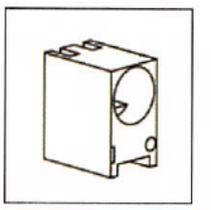

Page 96

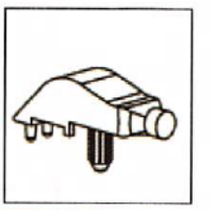

Page 96

Insulators

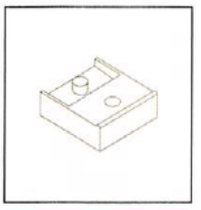

Page 98

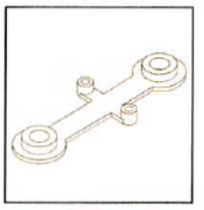

Page 99



Pages 61, 99

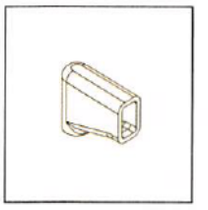

Pages 100-102

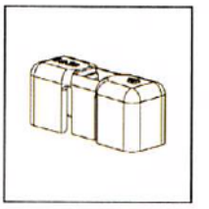

Pages 102, 103

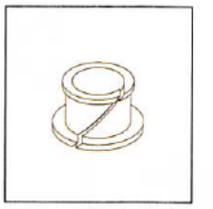

Page 105

Cable Ties & Accessories

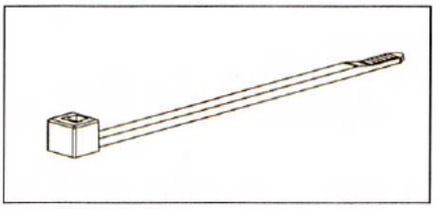

Pages 108, 109, 111



Page 110

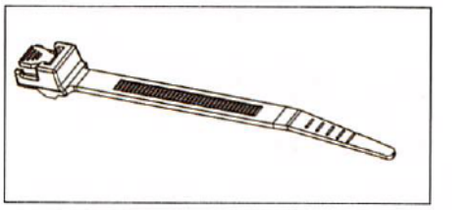

Page 112

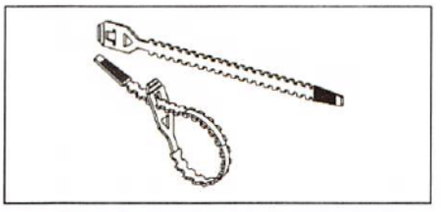

Pages 113, 114

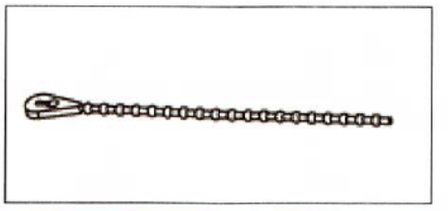

Pages 113, 114

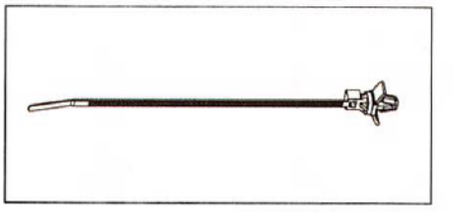

Pages 115-117

539-4060 Sam
Get quote
Angic Global Solutions 1-888-872-0690
https://www.AngicGlobal.com Sales@AngicGlobal.com

Cable Ties & Accessories

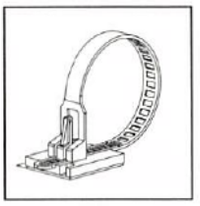

Pages 118, 120

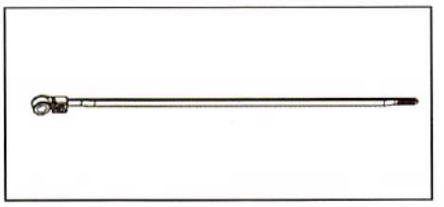

Page 119

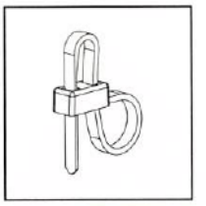

Page 120

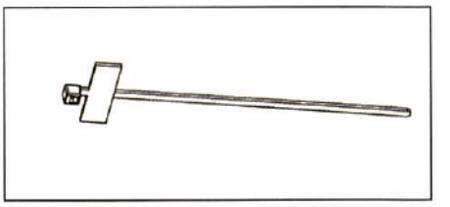

Page 121

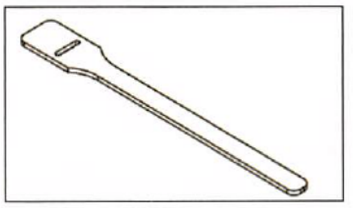

Pages 121-123

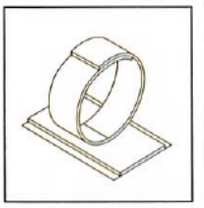

Page 123

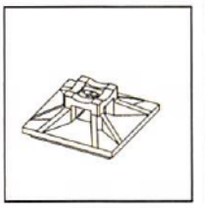

Page 124

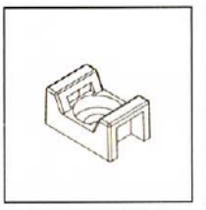

Pages 123, 125

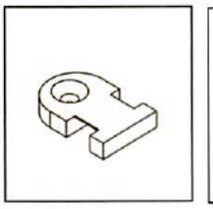

Page 126

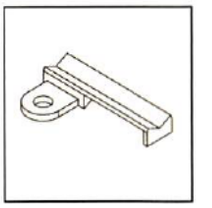

Page 126

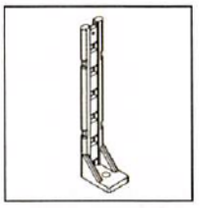

Page 127

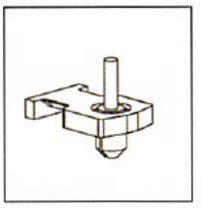

Page 127

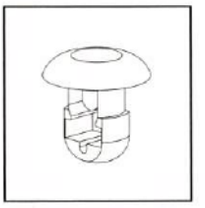

Page 128

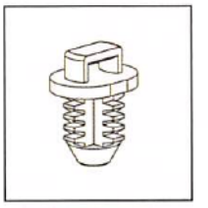

Page 128

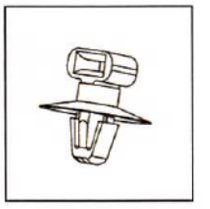

Pages 128, 129

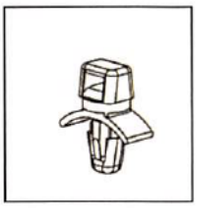

Page 129

Cable Management

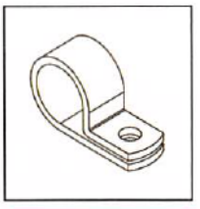

Pages 132-134

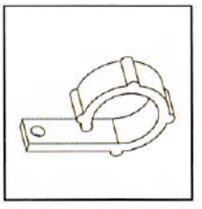

Page 133

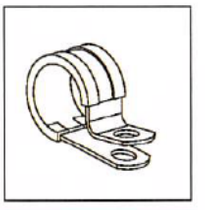

Page 134

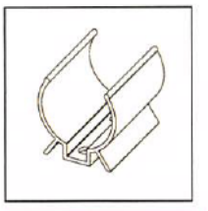

Page 135

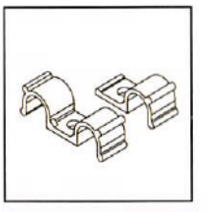

Page 136



Page 136

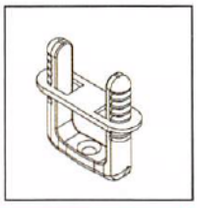

Page 137



Page 138

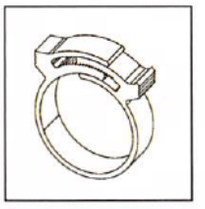

Page 139

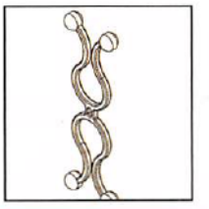

Page 139



Page 140

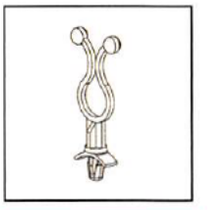

Pages 141-142 145-146

800-621-1892
Get quote
Angic Global Solutions 1-888-872-0690
https://www.AngicGlobal.com Sales@AngicGlobal.com

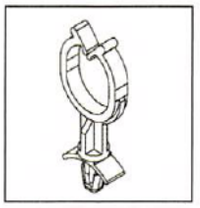
Page 143

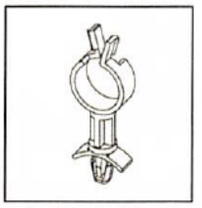
Pages 143-144

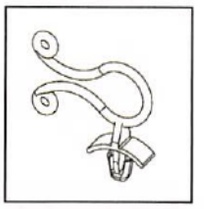
Page 144

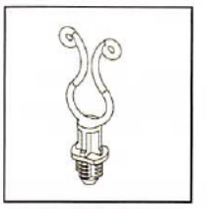
Page 145

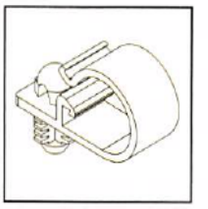
Page 146

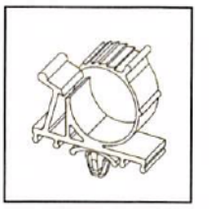
Page 147

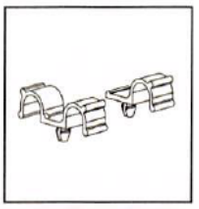
Page 147

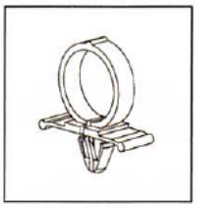
Page 148

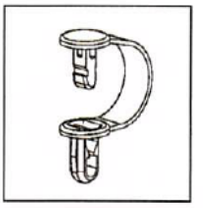
Page 148

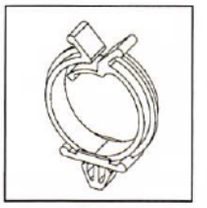
Page 149

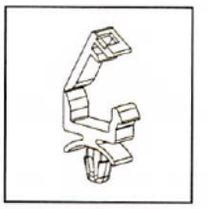
Pages 149, 154

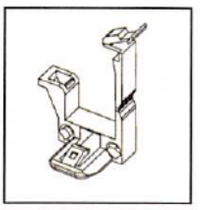
Page 150

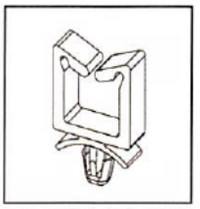
Pages 150, 151, 153

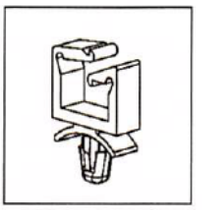
Pages 151, 153

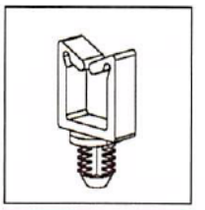
Page 152

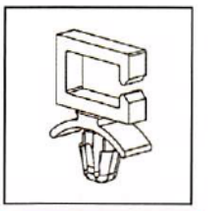
Page 152

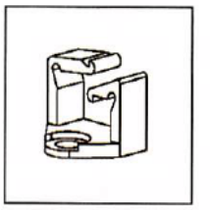
Page 153

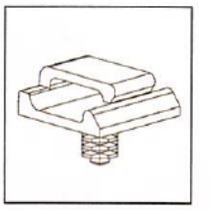
Page 154

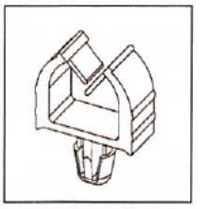
Pages 155, 156

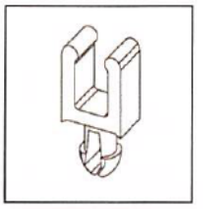
Page 156

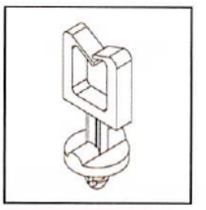
Page 156

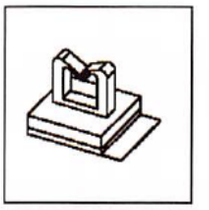
Page 157

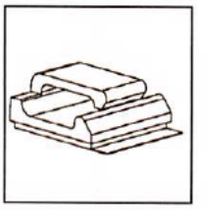
Page 157

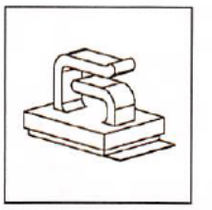
Page 157


Page 158

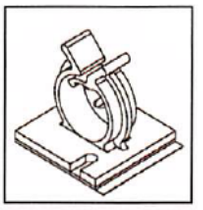
Page 158

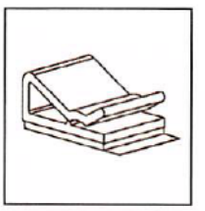
Page 159

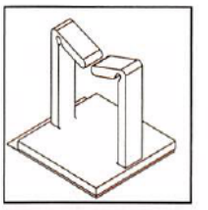
Page 159

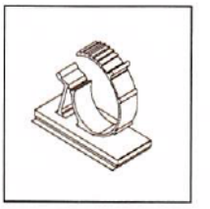
Page 160

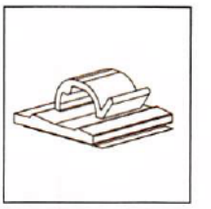
Page 161

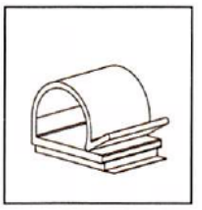
Page 162

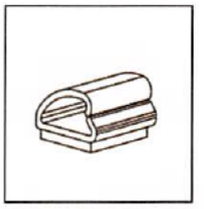
Page 163

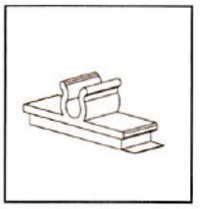
Page 164

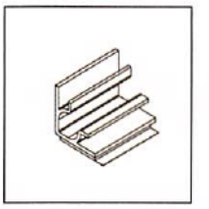
Page 164

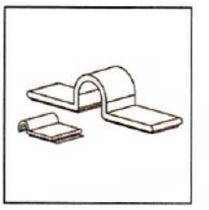
Page 165

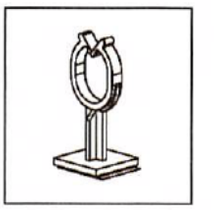
Page 165

539-4060 Sam
Get quote
Angic Global Solutions 1-888-872-0690
https://www.AngicGlobal.com Sales@AngicGlobal.com

Cable Management

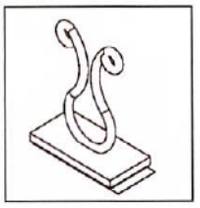
Page 166


Page 167

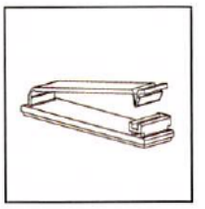
Pages 168, 171

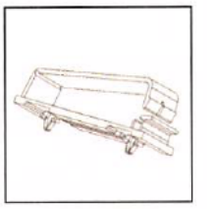
Page 168

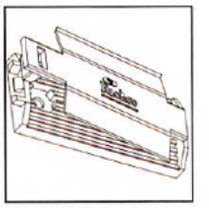
Page 169

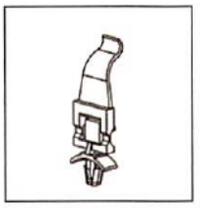
Page 169

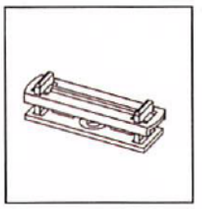
Page 170

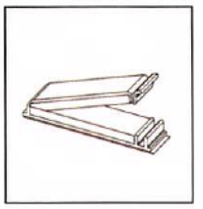
Pages 168, 171

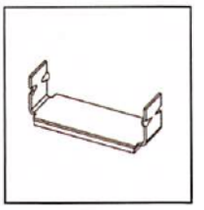
Page 172

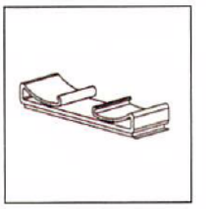
Page 172

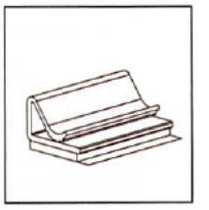
Page 173

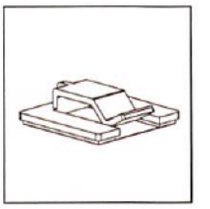
Page 173

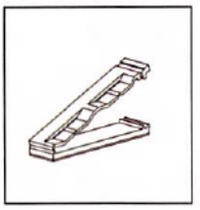
Page 174

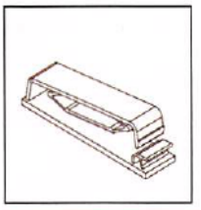
Page 174

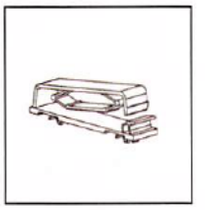
Page 174

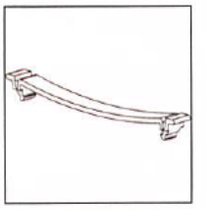
Page 175

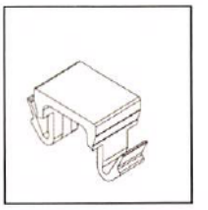
Page 175

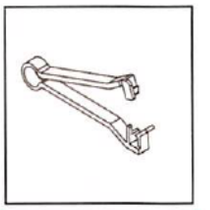
Page 175

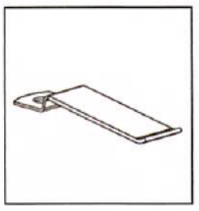
Page 176

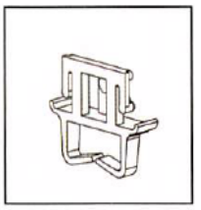
Page 177

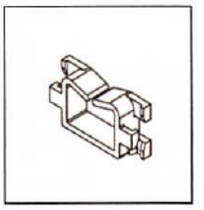
Pages 177-178

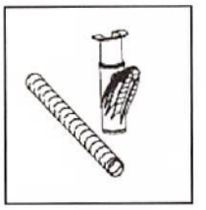
Page 179

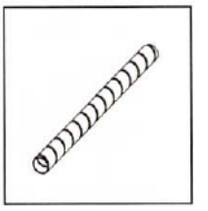
Page 180


Page 180

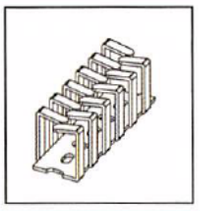
Page 181

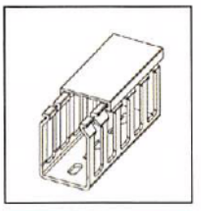
Page 181

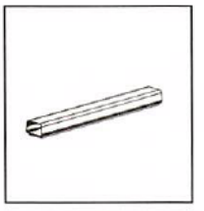
Page 182

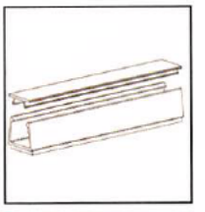
Page 182

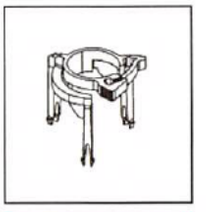
Page 183

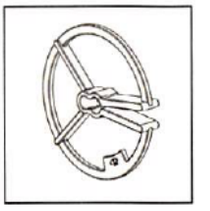
Page 183

-800-621-1892
Get quote
Angic Global Solutions 1-888-872-0690
https://www.AngicGlobal.com Sales@AngicGlobal.com

Fiber Management


Page 186

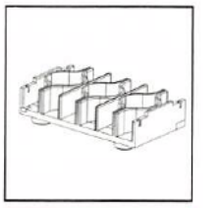
Page 187


Page 187

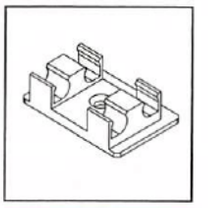
Pages 188-191

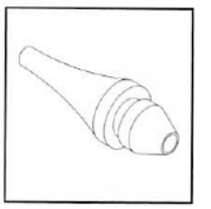
Page 193

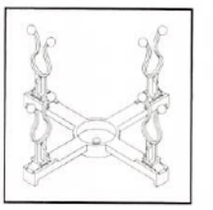
Pages 194-195

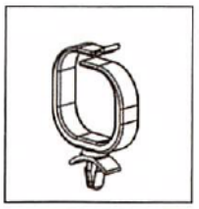
Page 195

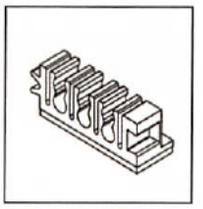
Page 196

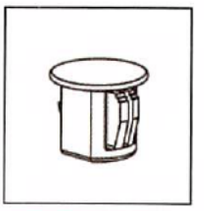
Page 201

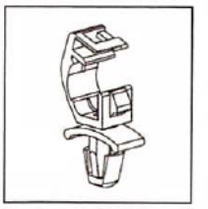
Page 204

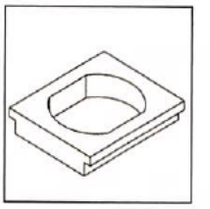
Page 202

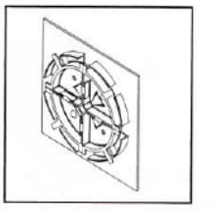
Pages 208-212

Grommets & Bushings

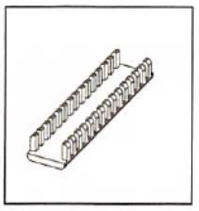
Page 216

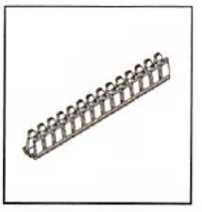
Page 217

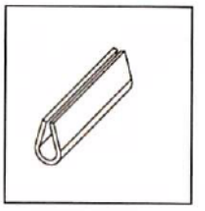
Page 218

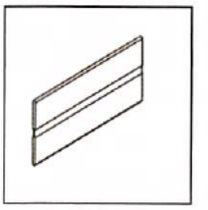
Page 218

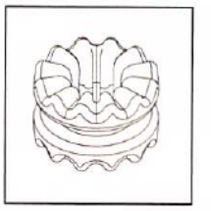
Page 219

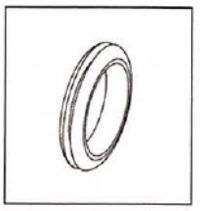
Pages 219-220


Page 224

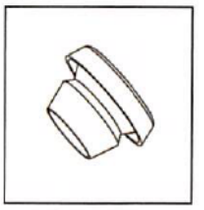
Pages 222-224

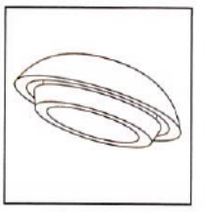
Page 224

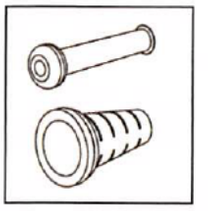
Page 222

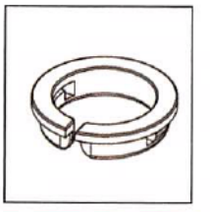
Page 221

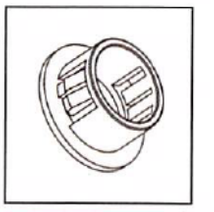
Page 223


Page 223

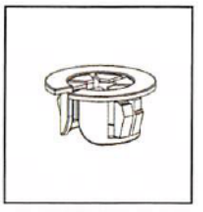
Page 223

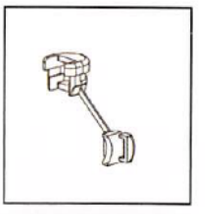
Page 225

39-4060 Samp
Get quote
Angic Global Solutions 1-888-872-0690
https://www.AngicGlobal.com Sales@AngicGlobal.com

General Information

GENERAL INFORMATION

- Richco Mfr. UL No. E61981 (N)
- Federal Cage (Mil) No. 06915 with Control No. Designation B1041
- Yellow Card #E71558 (N)

Remember... if you don't see what you need, call us!

Send us a design or sketch your design and we'll take it from there.

NYLON COLOR

All parts which are manufactured in Nylon 6/6 (RMS-01) or Flame Retardant Nylon 6/6 (RMS-19) are natural in color unless otherwise specified. Nylon 6/6 (RMS-01) can be supplied in most any color for an additional charge. Please contact Richco Customer Service for pricing. To dye the products, delivery takes approximately 2 to 4 weeks providing that the natural Nylon part is in stock. Dyed parts cannot be color matched. Color matched parts will require a minimum order quantity (MOQ) and additional lead time.

Nylon Storage Guidelines / Shelf Life

All Richco Nylon parts are packaged in sealed plastic bags and contain an appropriate level of moisture. When stored in the original unopened bags at 73°F (23°C) and 50% RH, parts shelf life is one year from date of shipment.

SPECIFICATIONS

Specifications in this catalog are for reference only. Richco reserves the right to make changes in the specifications of its proprietary products at any time without notice. Contact Richco for our latest technical drawings.

RELEASE TAB

"Typical Release Tab Location", when noted anywhere in this catalog, refers to an adhesive liner release tab that could exist on any side of a Richco part unless otherwise noted.

TOLERANCES

Unless Otherwise Noted

	Extruded	Molded	Metal
.x	—	± — (0.40)	—
.xx	± .020 (0.51)	± .01 (0.25)	± .015 (0.38)
.xxx	± .015 (0.38)	—	± .005 (0.13)
Fractions	± 1/32 (0.79)	± 1/64 (0.40)	± 1/64 (0.40)

All dimensions shown in this catalog are in inches (metric) unless otherwise noted.

Notes:

- **Up-to-the minute product updates can be seen on our corporate web page at www.richco-inc.com**
- **Raw Material Specifications (RMS) can be found at the end of the catalog – pages 227-234**
- **Want to try a sample? Please call 1-800-621-1892**

-800-621-1892 Angic Global Solutions 1-888-872-0690
https://www.AngicGlobal.com Sales@AngicGlobal.com
ANGIC Get quote

General Features

Richco offers a range of products for printed circuit boards (PCBs), which aid the support, spacing, locking and guiding of the board within electronic applications. The majority of supports are designed to be installed manually by hand and do not require automated assembly equipment. Richco's circuit board hardware products are available in a wide array of materials. Richco provides the largest selection of PCB hardware products in the electronics industry.

Typical Applications

- Automotive – GPS, CD and radio equipment
- Brown Goods – Audio and video equipment, consumer electronics
- Security Systems – CCTV, X-ray, alarms and scanning equipment
- Office equipment – Computers, computer peripherals and photocopiers
- White Goods – Microwaves, washing machines, ovens
- Telecommunications equipment – Transponder/receiver cards, signal amplifier modules.

Terminology

Snap-Lock

A snap-in mount that is pushed through the hole in the panel or chassis, which closes and snaps open on the opposite side to give a mechanical and secure lock. To remove, simply squeeze the locking device of the spacer/support.

Snap-Fit

A snap-in mount that is pushed through a hole in a panel or chassis and deflects on the opposite side to produce a mechanical pressure hold. To remove simply pull or push, no squeezing of the device is required.

Custom Options

Special Order

Parts that are identified as "special order" will require a minimum order quantity (MOQ) as well as possible tooling charges.

Locking Devices and Spacer Heights

If you do not find a spacer/support with the locking device or spacer length that meets your requirements, please contact your local Richco office. We have the ability to interchange locking devices and create custom spacer lengths on most of our circuit board spacers and supports. In some instances new tooling and an MOQ may apply.

Materials

The most common materials used for Richco's circuit board hardware are:

Material	UL94 Flammability Rating	RoHS Compliance	RMS
Nylon 6/6	V2	Yes	01
Nylon 6/6	V0	Yes	19

For more details on material properties please consult the materials data section (RMS) of the catalog. Should you require a part to be manufactured in a different material which is not shown in the catalog, please contact your local Richco office to discuss your requirements.

Color

Circuit board supports manufactured in Nylon 6/6 (RMS-01) can by dyed almost any color. Delivery can take approximately 2-4 weeks provided that the natural Nylon part is in stock. Please note dyed parts cannot be color matched. However, we can color match if we are provided with a Pantone or RAL color code reference. Please contact your local Richco office for further details.

Stress Relieved Parts

For use of products in extremely hot and dry conditions, most circuit board supports manufactured in Nylon 6/6 (RMS-01) can be "stress relieved" to retard moisture evaporation from the part. To order, add -SR after the part number. Please consult your local Richco office for a quotation. Stress relieved parts are manufactured in the U.S. only.

Introduction

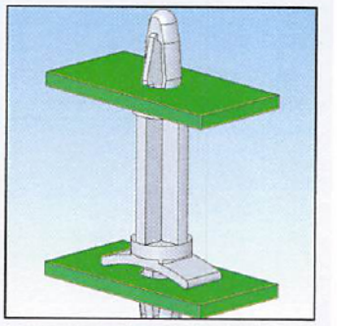

Locking Circuit Board Supports

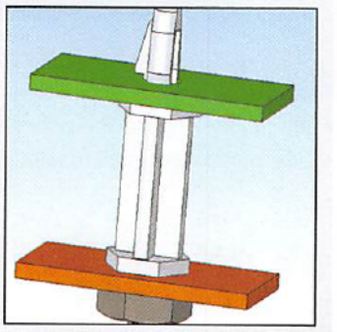

Studded Circuit Board Supports

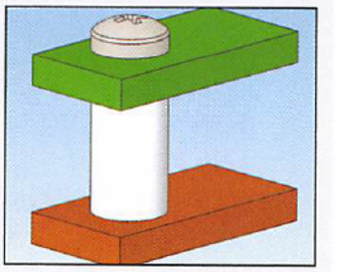

Nylon Spacers

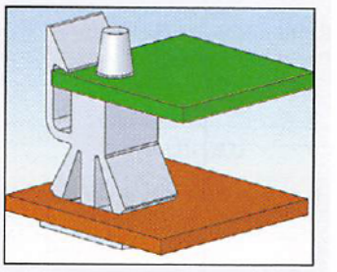

Reverse Locking Edge Holding Circuit Board Supports

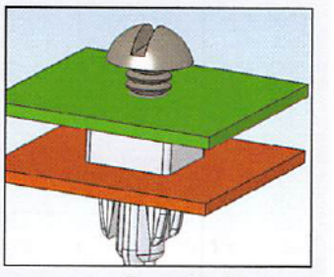

Expansion Grommets

39-4060 Samp

Get quote

Angic Global Solutions 1-888-872-0690
https://www.AngicGlobal.com Sales@AngicGlobal.com

A

LCBS
Locking Circuit Board Support

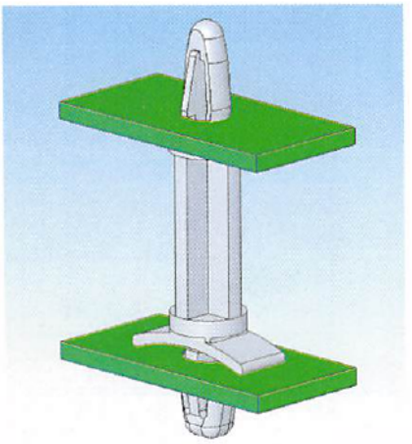

LCBS

Top Hole: Snap-lock: .156 ± .003 (4 ± 0.08)
Panel Thickness: .062 (1.57)

Fig. 1

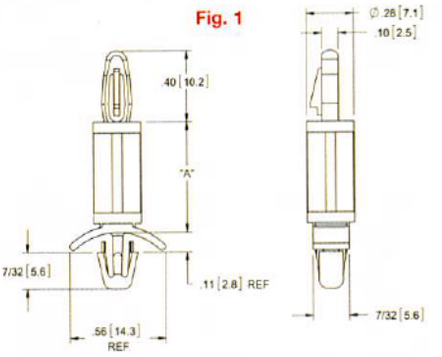

Bottom Hole: Snap-lock: .187 ± .003 (4.75 ± 0.08)
Panel Thickness: .031 - .078 (0.79 - 1.98)

LCBS-2

Top Hole: Snap-lock: .156 ± .003 (4 ± 0.08)
Panel Thickness: .062 (1.57)

Fig. 2

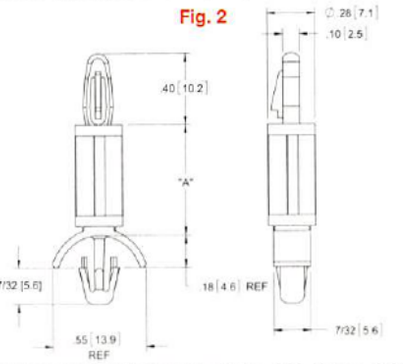

Bottom Hole: Snap-lock: .187 ± .003 (4.75 ± 0.08)
Panel Thickness: .078 - .140 (1.98 - 3.56)

Features

- Unique locking device provides a mechanically secure connection
- One-piece design eliminates the need for screws, nuts and washers

LCBS-3

Top Hole: Snap-lock: .156 ± .003 (4 ± 0.08)
Panel Thickness: .093 (2.36)

Fig. 3

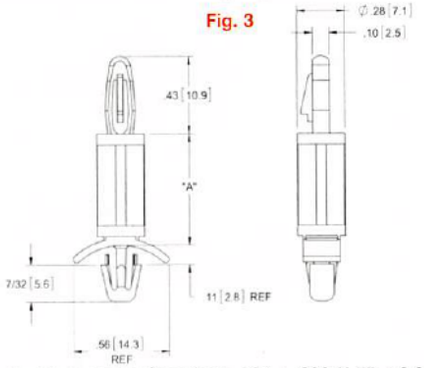

Bottom Hole: Snap-lock: .187 ± .003 (4.75 ± 0.08)
Panel Thickness: .031 - .078 (0.79 - 1.98)

LCBS-5

Top Hole: Snap-lock: .156 ± .003 (4 ± 0.08)
Panel Thickness: .062 (1.57)

Fig. 4

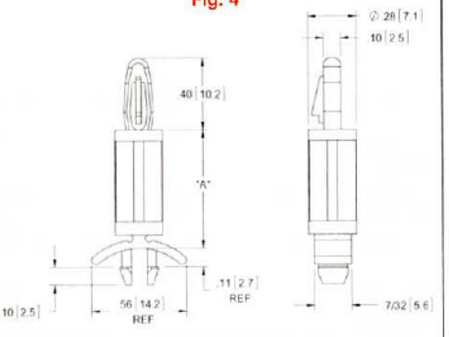

Bottom Hole: Snap-lock: .187 ± .003 (4.75 ± 0.08)
Panel Thickness: .031 - .078 (0.79 - 1.98)

LCBS-6

Top Hole: Snap-lock: .156 ± .003 (4 ± 0.08)
Panel Thickness: .093 (2.36)

Fig. 5

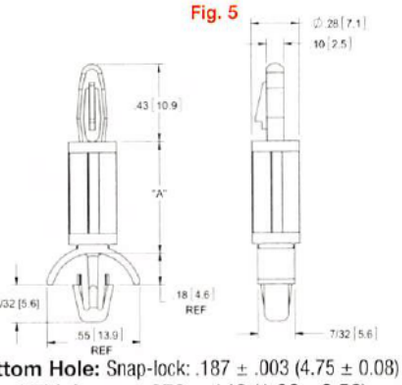

Bottom Hole: Snap-lock: .187 ± .003 (4.75 ± 0.08)
Panel Thickness: .078 - .140 (1.98 - 3.56)

LCBS (Fig. 1)		LCBS-2 (Fig. 2)		LCBS-3 (Fig. 3)	LCBS-5 (Fig. 4)	LCBS-6 (Fig. 5)	Standard Pack: 1,000 per bag
Mat'l: Nylon 6/6, RMS-01 Color: Natural	Mat'l: Nylon 6/6, RMS-19 Color: Natural	Mat'l: Nylon 6/6, RMS-01 Color: Natural	Mat'l: Nylon 6/6, RMS-19 Color: Natural	Mat'l: Nylon 6/6, RMS-01* Color: Natural	Mat'l: Nylon 6/6, RMS-01* Color: Natural	Mat'l: Nylon 6/6, RMS-01* Color: Natural	"A" Standoff Height ± .015 (0.4)
LCBS-3-01	LCBS-3-19	LCBS-2-3-01	LCBS-2-3-19	LCBS-3-3-01	LCBS-5-3-01	LCBS-6-3-01	3/16 (4.8)
LCBS-4-01	LCBS-4-19	LCBS-2-4-01	LCBS-2-4-19	LCBS-3-4-01	LCBS-5-4-01	LCBS-6-4-01	1/4 (6.4)
LCBS-5-01	LCBS-5-19	LCBS-2-5-01	LCBS-2-5-19	LCBS-3-5-01	LCBS-5-5-01	LCBS-6-5-01	5/16 (7.9)
LCBS-6-01	LCBS-6-19	LCBS-2-6-01	LCBS-2-6-19	LCBS-3-6-01	LCBS-5-6-01	LCBS-6-6-01	3/8 (9.5)
LCBS-7-01	LCBS-7-19	LCBS-2-7-01	LCBS-2-7-19	LCBS-3-7-01	LCBS-5-7-01	LCBS-6-7-01	7/16 (11.1)
LCBS-8-01	LCBS-8-19	LCBS-2-8-01	LCBS-2-8-19	LCBS-3-8-01	LCBS-5-8-01	LCBS-6-8-01	1/2 (12.7)
LCBS-10-01	LCBS-10-19	LCBS-2-10-01	LCBS-2-10-19	LCBS-3-10-01	LCBS-5-10-01	LCBS-6-10-01	5/8 (15.9)
LCBS-12-01	LCBS-12-19	LCBS-2-12-01	LCBS-2-12-19	LCBS-3-12-01	LCBS-5-12-01	LCBS-6-12-01	3/4 (19.1)
LCBS-14-01	LCBS-14-19	LCBS-2-14-01	LCBS-2-14-19	LCBS-3-14-01	LCBS-5-14-01	LCBS-6-14-01	7/8 (22.2)
LCBS-16-01	LCBS-16-19	LCBS-2-16-01	LCBS-2-16-19	LCBS-3-16-01	LCBS-5-16-01	LCBS-6-16-01	1 (25.4)
LCBS-18-01	LCBS-18-19	LCBS-2-18-01	LCBS-2-18-19	LCBS-3-18-01	LCBS-5-18-01	LCBS-6-18-01	1-1/8 (28.6)
LCBS-20-01	LCBS-20-19	LCBS-2-20-01	LCBS-2-20-19	LCBS-3-20-01	LCBS-5-20-01	LCBS-6-20-01	1-1/4 (31.7)
LCBS-22-01	LCBS-22-19	LCBS-2-22-01	LCBS-2-22-19	LCBS-3-22-01	LCBS-5-22-01	LCBS-6-22-01	1-3/8 (34.9)
*Available in UL94 V0 material by special order only. To order, replace -01 with -19.							
Available by special order; 5,000 piece minimum.							

Metric Lengths	
LCBS (Fig. 1)	Standard Pack: 1,000 per bag
Mat'l: Nylon 6/6, RMS-01* Color: Blue	"A" Standoff Height ± 0.4
LCBS-6M-01	6
LCBS-8M-01	8
LCBS-10M-01	10
LCBS-12M-01	12
LCBS-14M-01	14
LCBS-16M-01	16
*Available in UL94 V0 material. To order, replace -01 with -19.	
Available by special order; 5,000 piece minimum.	

-800-621-1892
ANGIC
Get quote
Angic Global Solutions 1-888-872-0690
https://www.AngicGlobal.com Sales@AngicGlobal.com

A

LCBS-HT
High Temperature Circuit Board Support

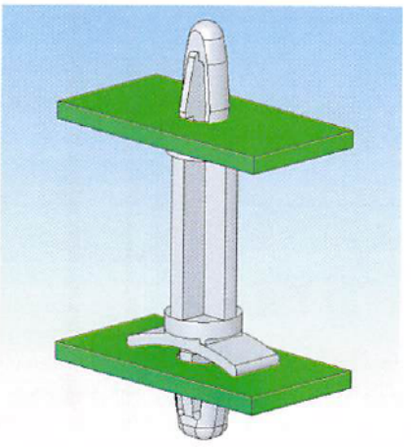

Material Operating Temperature
-40-392°F (-40-200°C)

Top Hole: Snap-lock: .156 ± .003 (4 ± 0.08)
Panel Thickness: .062 (1.57)

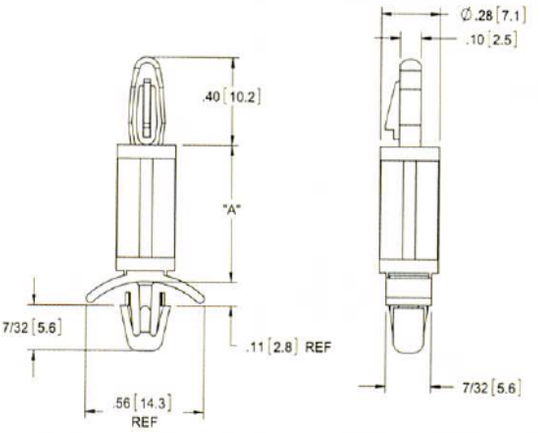

Bottom Hole: Snap-lock: .187 ± .003 (4.75 ± 0.08)
Panel Thickness: .031 - .078 (0.79 - 1.98)

LCBS-HT	Standard Pack: 1,000 per bag
Mat'l: PEI, RMS-162 Color: Black	"A" Standoff Height ± .015 (0.4)
LCBS-3-HT	3/16 (4.8)
LCBS-4-HT	1/4 (6.4)
LCBS-5-HT	5/16 (7.9)
LCBS-6-HT	3/8 (9.5)
LCBS-7-HT	7/16 (11.1)
LCBS-8-HT	1/2 (12.7)
LCBS-10-HT	5/8 (15.9)
LCBS-12-HT	3/4 (19.1)
LCBS-14-HT	7/8 (22.2)
LCBS-16-HT	1 (25.4)
LCBS-18-HT	1-1/8 (28.6)
LCBS-20-HT	1-1/4 (31.7)
LCBS-22-HT	1-3/8 (34.9)

LCBS-4

Top Hole: Snap-fit: .156 ± .003 (4 ± 0.08)
Panel Thickness: .062 (1.57)

Fig. 1

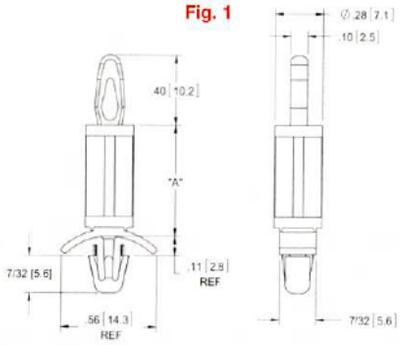

Bottom Hole: Snap-lock: .187 ± .003 (4.75 ± 0.08)
Panel Thickness: .031 - .078 (0.79 - 1.98)

LCBS-7

Top Hole: Snap-lock: .156 ± .003 (4 ± 0.08)
Panel Thickness: .062 (1.57)

Fig. 2

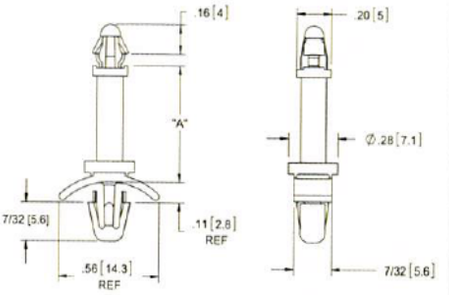

Bottom Hole: Snap-lock: .187 ± .003 (4.75 ± 0.08)
Panel Thickness: .031 - .078 (0.79 - 1.98)

LCBS-8

Top Hole: Snap-lock: .156 ± .003 (4 ± 0.08)
Panel Thickness: .062 (1.57)

Fig. 3

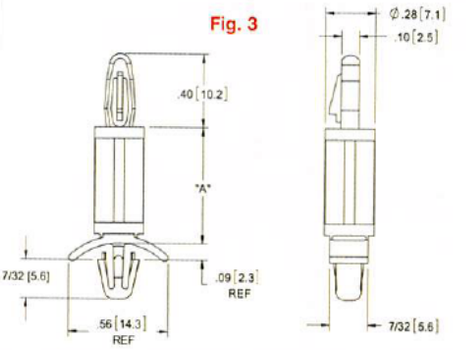

Bottom Hole: Snap-lock: .187 ± .003 (4.75 ± 0.08)
Panel Thickness: .008 - .055 (0.2 - 1.4)

LCBS-4 (Fig. 1)	LCBS-7 (Fig. 2)	LCBS-8 (Fig. 3)	Standard Pack: 1,000 per bag
Mat'l: Nylon 6/6, RMS-01* Color: Natural	Mat'l: Nylon 6/6, RMS-01* Color: Natural	Mat'l: Nylon 6/6, RMS-01* Color: Natural	"A" Standoff Height ± .015 (0.4)
LCBS-4-3-01	LCBS-7-3-01	LCBS-8-3-01	3/16 (4.8)
LCBS-4-4-01	LCBS-7-4-01	LCBS-8-4-01	1/4 (6.4)
LCBS-4-5-01	LCBS-7-5-01	LCBS-8-5-01	5/16 (7.9)
LCBS-4-6-01	LCBS-7-6-01	LCBS-8-6-01	3/8 (9.5)
LCBS-4-7-01	LCBS-7-7-01	LCBS-8-7-01	7/16 (11.1)
LCBS-4-8-01	LCBS-7-8-01	LCBS-8-8-01	1/2 (12.7)
LCBS-4-10-01	LCBS-7-10-01	LCBS-8-10-01	5/8 (15.9)
LCBS-4-12-01	LCBS-7-12-01	LCBS-8-12-01	3/4 (19.1)
LCBS-4-14-01	LCBS-7-14-01	LCBS-8-14-01	7/8 (22.2)
LCBS-4-16-01	LCBS-7-16-01	LCBS-8-16-01	1 (25.4)
LCBS-4-18-01	LCBS-7-18-01	LCBS-8-18-01	1-1/8 (28.6)
LCBS-4-20-01	LCBS-7-20-01	LCBS-8-20-01	1-1/4 (31.7)
LCBS-4-22-01	LCBS-7-22-01	LCBS-8-22-01	1-3/8 (34.9)
*Available in UL94 V0 material by special order. To order, replace -01 with -19.			
Available by special order only; 5,000 piece minimum.			

39-4060 Samp
Get quote
Angic Global Solutions 1-888-872-0690
https://www.AngicGlobal.com Sales@AngicGlobal.com

A

LCBST

Top Hole: Snap-lock: .125 ± .002 (3.18 ± 0.05)
Panel Thickness: .062 (1.57)

Fig. 1

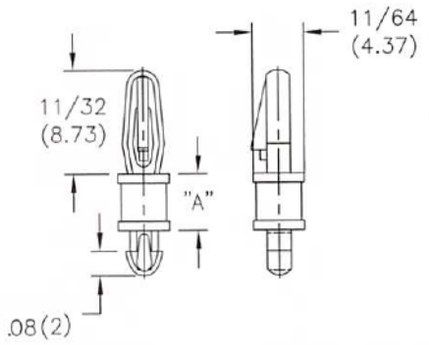

Bottom Hole: Snap-lock: .100 ± .002 (2.54 ± 0.05)
Panel Thickness: .064 (1.63) Max.

CLCBST

Top Hole: Snap-lock: .125 ± .002 (3.18 ± 0.05)
Panel Thickness: .062 (1.57)

Fig. 2

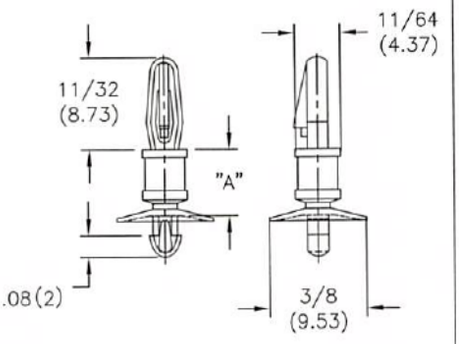

Bottom Hole: Snap-lock: .100 ± .002 (2.54 ± 0.05)
Panel Thickness: .062 (1.57)

LCBSM

Top Hole: Snap-lock: .125 ± .002 (3.18 ± 0.05)
Panel Thickness: .062 (1.57)

Fig. 3

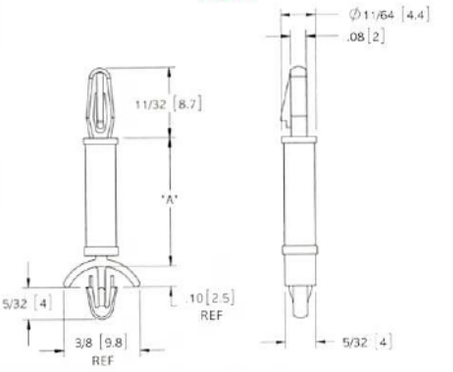

Bottom Hole: Snap-lock: .125 ± .002 (3.18 ± 0.05)
Panel Thickness: .031 - .078 (0.79 - 1.98)

CBS
Circuit Board Support

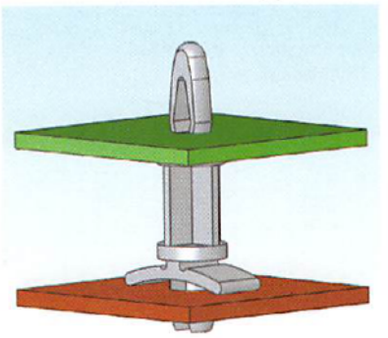

CBS

Top Hole: Snap-fit: .156 ± .003 (4 ± 0.08)
Panel Thickness: .062 (1.57)

Fig. 4

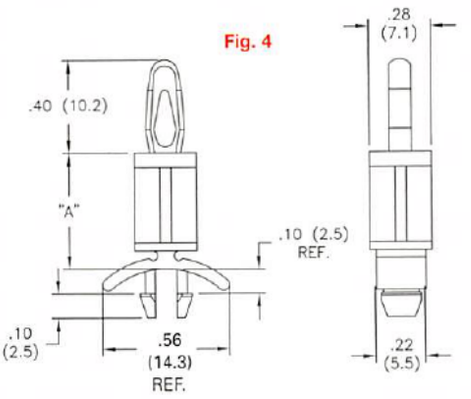

Bottom Hole: Snap-lock: .187 ± .003 (4.75 ± 0.08)
Panel Thickness: .031 - .078 (0.79 - 1.98)

LNCBS

Top Hole: Snap-fit: .156 ± .003 (4 ± 0.08)
Panel Thickness: .062 (1.57)

Fig. 5

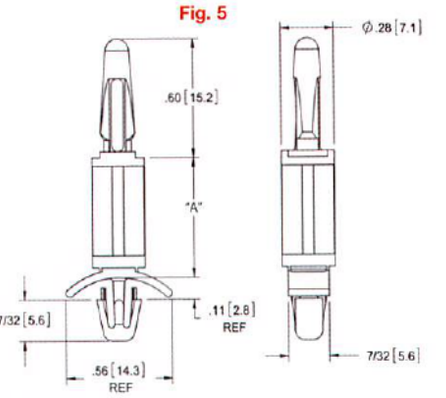

Bottom Hole: Snap-lock: .187 ± .003 (4.75 ± 0.08)
Panel Thickness: .031 - .078 (0.79 - 1.98)

Features
- Releasable to allow for repairs

LCBST (Fig. 1)	CLCBST (Fig. 2)	LCBSM (Fig. 3)	CBS (Fig. 4)		LNCBS (Fig. 5)		Standard Pack: 1,000 per bag
Mat'l: Nylon 6/6, RMS-01* Color: Natural	Mat'l: Nylon 6/6, RMS-01* Color: Natural	Mat'l: Nylon 6/6, RMS-01* Color: Natural	Mat'l: Nylon 6/6, RMS-01 Color: Natural	Mat'l: Nylon 6/6, RMS-19 Color: Natural	Mat'l: Nylon 6/6, RMS-01 Color: Natural	Mat'l: Nylon 6/6, RMS-19 Color: Natural	"A" Standoff Height ± .015 (0.4)
LCBST-2-01	CLCBST-2-01	LCBSM-2-01	Not Available	Not Available	Not Available	Not Available	1/8 (3.2)
LCBST-3-01	CLCBST-3-01	LCBSM-3-01	CBS-3-01	CBS-3-19	LNCBS-3-01	LNCBS-3-19	3/16 (4.8)
LCBST-4-01	CLCBST-4-01	LCBSM-4-01	CBS-4-01	CBS-4-19	LNCBS-4-01	LNCBS-4-19	1/4 (6.4)
LCBST-5-01	CLCBST-5-01	LCBSM-5-01	Not Available	Not Available	Not Available	Not Available	5/16 (7.9)
LCBST-6-01	CLCBST-6-01	LCBSM-6-01	CBS-6-01	CBS-6-19	LNCBS-6-01	LNCBS-6-19	3/8 (9.5)
LCBST-7-01	CLCBST-7-01	LCBSM-7-01	Not Available	Not Available	Not Available	Not Available	7/16 (11.1)
LCBST-8-01	CLCBST-8-01	LCBSM-8-01	CBS-8-01	CBS-8-19	LNCBS-8-01	LNCBS-8-19	1/2 (12.7)
LCBST-9-01	CLCBST-9-01	LCBSM-9-01	Not Available	Not Available	Not Available	Not Available	9/16 (14.3)
LCBST-10-01	CLCBST-10-01	LCBSM-10-01	CBS-10-01	CBS-10-19	LNCBS-10-01	LNCBS-10-19	5/8 (15.9)
-	-	-	CBS-12-01	CBS-12-19	LNCBS-12-01	LNCBS-12-19	3/4 (19.1)
-	-	-	CBS-14-01	CBS-14-19	LNCBS-14-01	LNCBS-14-19	7/8 (22.2)
*Available in UL94 V0 material by special order. To order, replace -01 with -19.							
Available by special order only; 5,000 piece minimum.							

-800-621-1892
ANGIC
Get quote
Angic Global Solutions 1-888-872-0690
https://www.AngicGlobal.com Sales@AngicGlobal.com

BHL

Top Hole: Snap-lock: .156 ± .003 (4 ± 0.08)
Panel Thickness: .062 (1.57)

Fig. 1

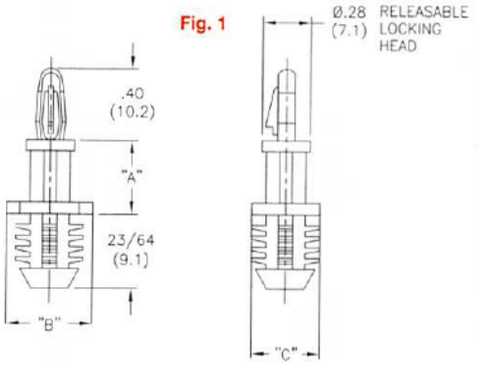

Bottom Hole: Press-fit: .312 ± .003 (7.92 ± 0.08)
Panel Thickness: 1/4 (6.4) Min.

BHL/BHC
Blind Hole Series

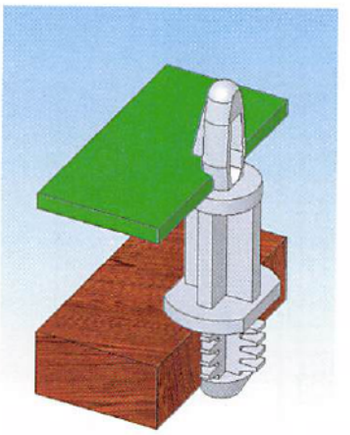

BHC

Top Hole: Snap-fit: .156 ± .003 (4 ± 0.08)
Panel Thickness: .062 (1.57)

Fig. 2

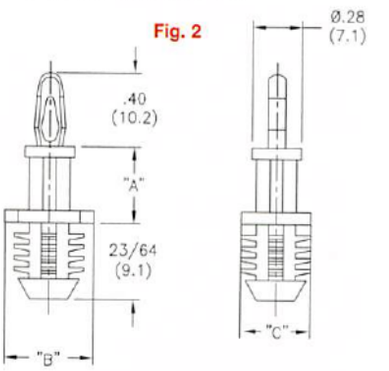

Bottom Hole: Press-fit: .312 ± .003 (7.92 ± 0.08)
Panel Thickness: 1/4 (6.4) Min.

Features

- Flexible ribs lock into round, oval, threaded, punched or drilled blind holes.
- Blunt tip allows maximum grip in blind holes with minimum protrusion in pass-through applications

BHL (Fig. 1)	BHC (Fig. 2)	Standard Pack: 1,000 per bag		
Mat'l: Nylon 6/6, RMS-01* Color: Natural	Mat'l: Nylon 6/6, RMS-01* Color: Natural	"A" Standoff Height ± .015 (0.4)	"B" ± .015 (0.4)	"C" ± .015 (0.4)
BHL-3-01	BHC-3-01	3/16 (4.8)	7/16 (11.1)	5/16 (7.9)
BHL-4-01	BHC-4-01	1/4 (6.4)		
BHL-6-01	BHC-6-01	3/8 (9.5)		
BHL-7-01	Not Available	7/16 (11.1)		
BHL-8-01	BHC-8-01	1/2 (12.7)		
BHL-10-01	BHC-10-01	5/8 (15.9)		
BHL-12-01	BHC-12-01	3/4 (19.1)		
BHL-14-01	BHC-14-01	7/8 (22.2)		
*Available in UL94 V0 material by special order. To order, replace -01 with -19.				
Press-fit for .250(6.35) hole available by special order.				

SRLCBS
Snap Rivet Locking Circuit Board Support

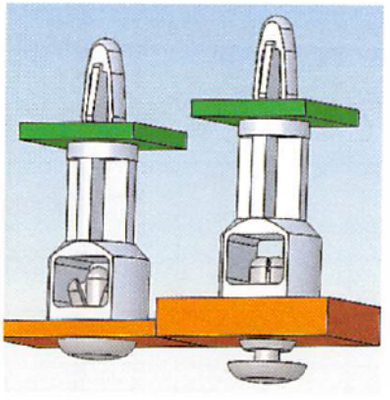

Top Hole: Snap-lock: .156 ± .003 (4 ± 0.08)
Panel Thickness: .062 (1.57)

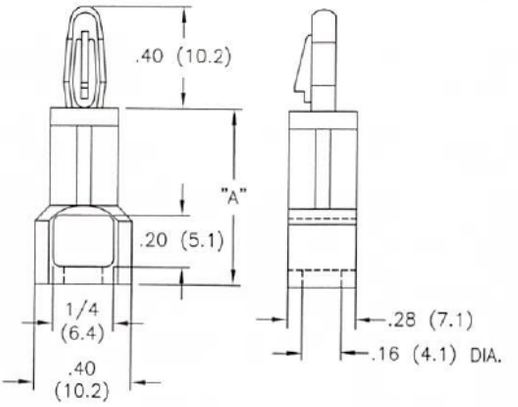

Bottom Hole: Snap Rivet: .161 - .165 (4.1 - 4.2)
Panel Thickness: See Rivet Table

Mat'l: Nylon 6/6, RMS-01* Color: Natural	Standard Pack: 1,000 per bag
	"A" Standoff Height ± .015 (0.4)
SRLCBS-6-01	3/8 (9.5)
SRLCBS-7-01	7/16 (11.1)
SRLCBS-8-01	1/2 (12.7)
SRLCBS-10-01	5/8 (15.9)
SRLCBS-12-01	3/4 (19.1)
SRLCBS-14-01	7/8 (22.2)
SRLCBS-16-01	1 (25.4)
*Available in UL94 V0 material by special order. To order, replace -01 with -19.	

Use Richco Rivet Part No.	For Chassis Thickness
SR-4050	.026-.062 (0.7-1.6)
SR-4060	.062-.105 (1.5-2.7)
SR-4070	.105-.145 (2.7-3.7)
SR-4080	.145-.184 (3.7-4.7)
SR-4090	.184-.223 (4.7-5.7)
SR-4100	.223-.263 (5.7-6.7)
SR-4120	.282-.341 (7.2-8.7)
See Page Number 52	
Rivets also available in UL94 V0 material.	

Features

- Proper selection of rivet (sold separately) will accommodate a wide range of panel thicknesses
- Attractive button head on rivet provides minimal protrusion on chassis underside

ANGIC Get quote
Angic Global Solutions 1-888-872-0690
https://www.AngicGlobal.com Sales@AngicGlobal.com

A

DLCBS

Dual Locking Circuit Board Support

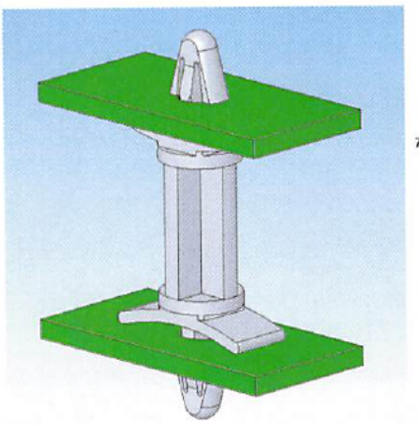

DLCBS

Top Hole: Snap-lock: .156 ± .003 (4 ± 0.08)
Panel Thickness: .031 - .078 (0.79 - 1.98)

Fig. 1

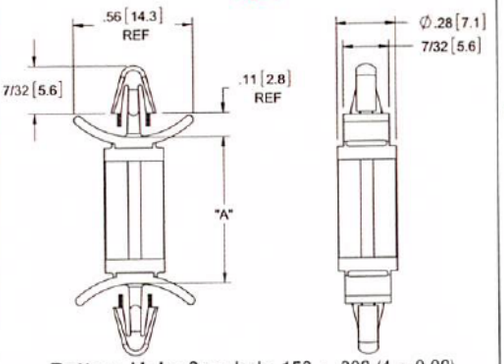

Bottom Hole: Snap-lock: .156 ± .003 (4 ± 0.08)
Panel Thickness: .031 - .078 (0.79 - 1.98)

DLCBS2

Top Hole: Snap-lock: .187 ± .003 (4.75 ± 0.08)
Panel Thickness: .031 - .078 (0.79 - 1.98)

Fig. 2

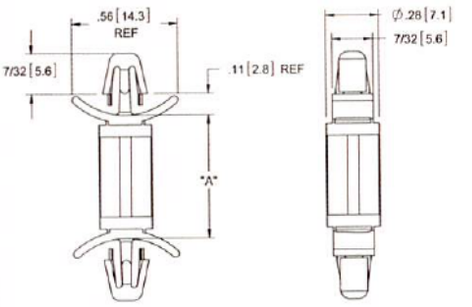

Bottom Hole: Snap-lock: .187 ± .003 (4.75 ± 0.08)
Panel Thickness: .031 - .078 (0.79 - 1.98)

Features

- One-piece design eliminates the need for screws, nuts and washers
- The tension wings on both ends of the support provide a tight fit

DLCBS3

Top Hole: Snap-lock: .156 ± .003 (4 ± 0.08)
Panel Thickness: .031 - .078 (0.79 - 1.98)

Fig. 3

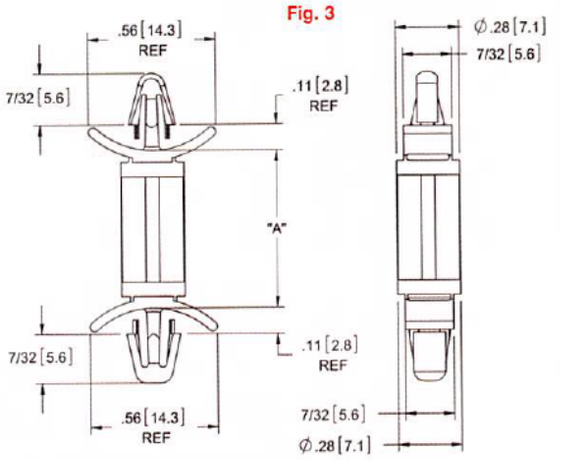

Bottom Hole: Snap-lock: .187 ± .003 (4.75 ± 0.08)
Panel Thickness: .031 - .078 (0.79 - 1.98)

DLCBSM

Top Hole: Snap-lock: .125 ± .002 (3.18 ± 0.05)
Panel Thickness: .031 - .078 (0.79 - 1.98)

Fig. 4

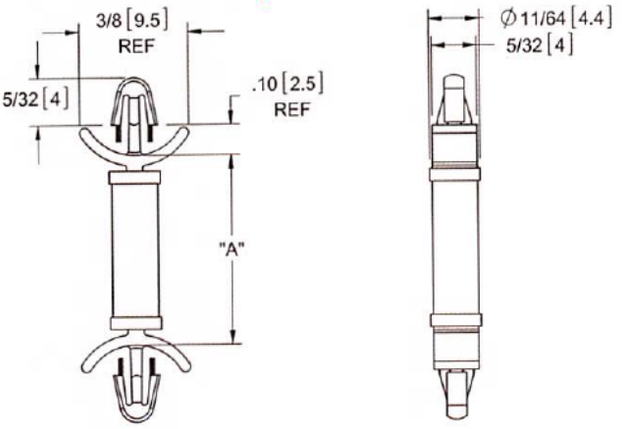

Bottom Hole: Snap-lock: .125 ± .002 (3.18 ± 0.05)
Panel Thickness: .031 - .078 (0.79 - 1.98)

DLCBS (Fig. 1)		DLCBS2 (Fig. 2)		DLCBS3 (Fig. 3)		DLCBSM (Fig. 4)	Standard Pack: 1,000 per bag
Mat'l: Nylon 6/6, RMS-01 Color: Natural	Mat'l: Nylon 6/6, RMS-19 Color: Natural	Mat'l: Nylon 6/6, RMS-01 Color: Natural	Mat'l: Nylon 6/6, RMS-19 Color: Natural	Mat'l: Nylon 6/6, RMS-01 Color: Natural	Mat'l: UL94 V0 Nylon 6/6, RMS-19 Color: Natural	Mat'l: Nylon 6/6, RMS-01 Color: Natural	"A" Standoff Height ± .015 (0.4)
DLCBS-3-01	DLCBS-3-19	DLCBS2-3-01	DLCBS2-3-19	DLCBS3-3-01	DLCBS3-3-19	DLCBSM-3-01	3/16 (4.8)
DLCBS-4-01	DLCBS-4-19	DLCBS2-4-01	DLCBS2-4-19	DLCBS3-4-01	DLCBS3-4-19	DLCBSM-4-01	1/4 (6.4)
Special Order	Special Order	Special Order	Special Order	-	-	DLCBSM-5-01	5/16 (7.9)
DLCBS-6-01	DLCBS-6-19	DLCBS2-6-01	DLCBS2-6-19	DLCBS3-6-01	DLCBS3-6-19	DLCBSM-6-01	3/8 (9.5)
Special Order	Special Order	Special Order	Special Order	-	-	DLCBSM-7-01	7/16 (11.1)
DLCBS-8-01	DLCBS-8-19	DLCBS2-8-01	DLCBS2-8-19	DLCBS3-8-01	DLCBS3-8-19	DLCBSM-8-01	1/2 (12.7)
Special Order	Special Order	Special Order	Special Order	-	-	DLCBSM-9-01	9/16 (14.3)
DLCBS-10-01	DLCBS-10-19	DLCBS2-10-01	DLCBS2-10-19	DLCBS3-10-01	DLCBS3-10-19	DLCBSM-10-01	5/8 (15.9)
DLCBS-12-01	DLCBS-12-19	DLCBS2-12-01	DLCBS2-12-19	DLCBS3-12-01	DLCBS3-12-19	Special Order	3/4 (19.1)
DLCBS-14-01	DLCBS-14-19	DLCBS2-14-01	DLCBS2-14-19	DLCBS3-14-01	DLCBS3-14-19	Special Order	7/8 (22.2)

Available in UL94 V0 material by special order. To order, replace -01 with -19.

Available by special order; 5,000 piece minimum.

-800-621-1892
Get quote
Angic Global Solutions 1-888-872-0690
https://www.AngicGlobal.com Sales@AngicGlobal.com

MDLCBS
Metal Dual Locking Circuit Board Support

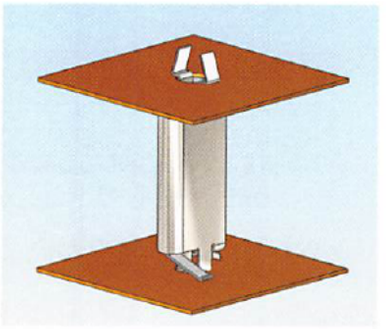

Patent D456,690

NEW

Top Hole: Snap-lock: .156 ± .003 (4 ± 0.08)
Panel Thickness: .062 (1.57)

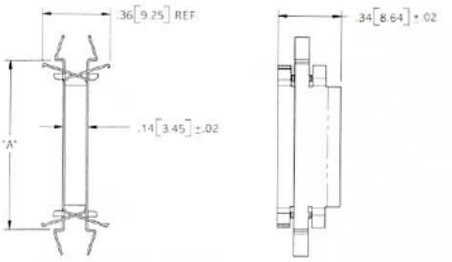

Bottom Hole: Snap-lock: .156 ± .003 (4 ± 0.08)
Panel Thickness: .062 (1.57)

Material: Stainless Steel, RMS-320	Standard Pack: 1,000 per bag
	"A" ±.015 (0.04)
MDLCBS-4	3/8 (9.5)
MDLCBS-6	1/2 (12.7)
MDLCBS-8	5/8 (15.9)
MDLCBS-12	7/8 (22.2)
MDLCBS-16	1-1/8 (28.6)

Features
- Highly conductive and impact resistant
- Metal lends superior strength and durability
- Innovative removable design

HSCBS/VD
Vibration and Shock Dampening Spacers

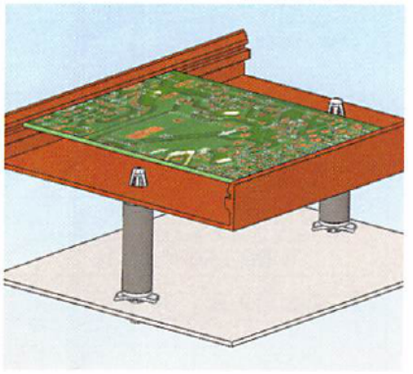

Patents Pending

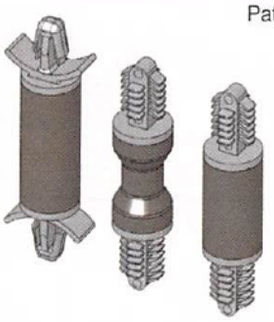

Standard Pack: 1,000 per bag			Fix Mat'l: Flame Ret. Nylon 6/6, RMS-169 Color: Natural		
Part No.	"A" ± .03 (0.8) Uncompressed	"B" Ref.	Standoff Material Color: Black	Target Load	Fig.
VD-2	.73 (18.5)	.62 (16.3)	TPE, RMS-167	1.0 lbf (4.4N)	1
VD-3	.97 (24.7)	.87 (22)			
VD-4	1.21 (30.7)	1.10 (28)			
VD-5	.49 (12.4)	.38 (9.7)		1.6 lbf (7.1N)	2
VD-6	.73 (18.5)	.62 (16.3)			
VD-7	.97 (24.7)	.87 (22)			
VD-8	1.21 (30.7)	1.10 (28)			
HSCBS-1	.59 (14.9)	.38 (9.7)	TPE, RMS-168	2.2 lbf (9.8N)	3
HSCBS-2	.83 (21)	.62 (16.3)			
HSCBS-3	1.07 (27.1)	.87 (22)			
HSCBS-4	1.31 (33.2)	1.10 (28)			

Features
- The flexible wings on the HSCBS series provide extra shock and vibration protection
- Select the appropriate "B" length for your required level of protection
- VD Series blind hole ends provide rigid mounting

Top Hole: .250 ± .003 (6.35 ± 0.08)
Panel Thickness: .07 - .31 (1.8 -7.9)

Fig. 1

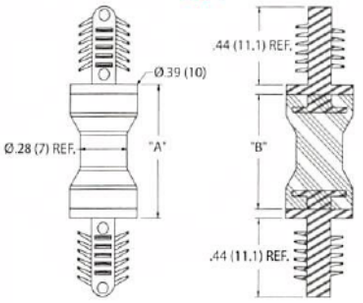

Fig. 2

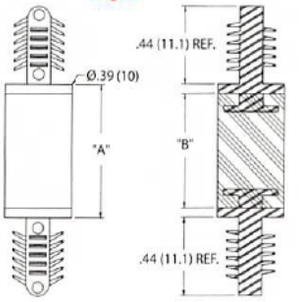

Bottom Hole: .250 ± .003 (6.35 ± 0.08)
Panel Thickness: .07-.31 (1.8 - 7.9)

Top Hole: Snap-lock: .187 ± .003 (4.75 ± 0.08)
Panel Thickness: .031 - .078 (0.79 - 1.98)

Fig. 3

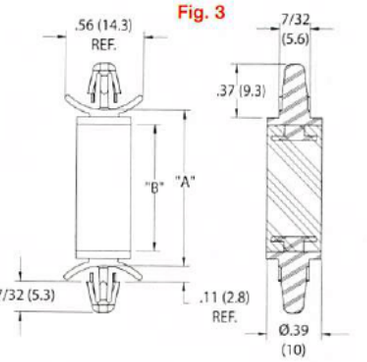

Bottom Hole: Snap-lock: .187 ± .003 (4.75 ± 0.08)
Panel Thickness: .031 - .078 (0.79 - 1.98)

ANGIC
Get quote
Angic Global Solutions 1-888-872-0690
https://www.AngicGlobal.com Sales@AngicGlobal.com

A

DLCBSRA

Releasable Dual Locking Circuit Board Support Arrowhead

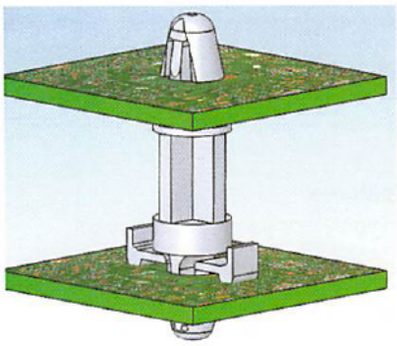

Features

- Chassis mount end has a releasable arrowhead to allow removal from top side of chassis
- Supports the European WEEE Initiative

Top Hole: Snap-lock: .187 ± .003 (4.75 ± 0.08)
Panel Thickness: .031 - .078 (0.79 - 1.98)

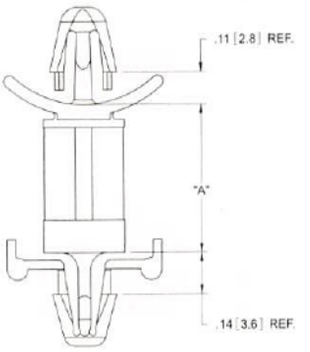

Bottom Hole: Snap-lock: .187 ± .003 (4.75 ± 0.08)
Panel Thickness: .031 - .078 (0.79 - 1.98)

DLCBSRA	Standard Pack: 1,000 per bag
Mat'l: Nylon 6/6, RMS-01* Color: Natural	"A" Standoff Height ± .015 (0.4)
DLCBSRA3-6-01	3/8 (9.5)
DLCBSRA3-8-01	1/2 (12.7)
DLCBSRA3-10-01	5/8 (15.9)
DLCBSRA3-12-01	3/4 (19.1)
DLCBSRA3-14-01	7/8 (22.2)
*Available in UL94 V0 material by special order. To order, replace -01 with -19.	

SRLAHS

Snap Rivet Locking Arrowhead Support

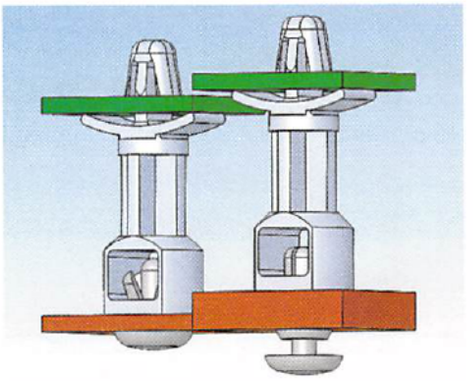

Features

- Proper selection of rivet (sold separately) will accommodate a wide range of panel thicknesses

Top Hole: Snap-lock: .187 ± .003 (4.75 ± 0.08)
Panel Thickness: .031 - .078 (0.79 - 1.98)

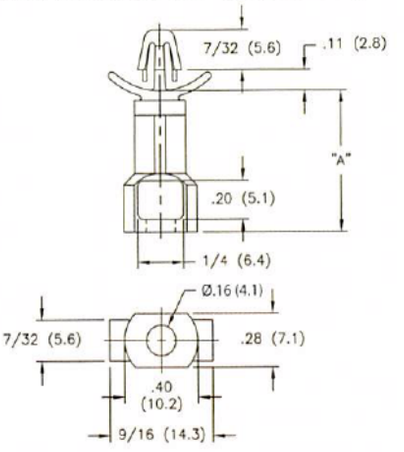

Bottom Hole: Snap Rivet: .161 - .165 (4.1 - 4.2)
Panel Thickness: See Rivet Table

Mat'l: Nylon 6/6, RMS-01* Color: Natural	Standard Pack: 1,000 per bag
	"A" Standoff Height ± .015 (0.4)
SRLAHS-7-01	7/16 (11.1)
SRLAHS-8-01	1/2 (12.7)
SRLAHS-10-01	5/8 (15.9)
SRLAHS-12-01	3/4 (19.1)
SRLAHS-14-01	7/8 (22.2)
SRLAHS-16-01	1 (25.4)
*Available in UL94 V0 material by special order. To order, replace -01 with -19.	

Use Richco Rivet Part No.	For Chassis Thickness
SR-4050	.026-.062 (0.7-1.6)
SR-4060	.062-.105 (1.5-2.7)
SR-4070	.105-.145 (2.7-3.7)
SR-4080	.145-.184 (3.7-4.7)
SR-4090	.184-.223 (4.7-5.7)
SR-4100	.223-.263 (5.7-6.7)
SR-4120	.282-.341 (7.2-8.7)
See Page Number 52	
Rivets also available in UL94 V0 material.	

BHDL

Blind Hole Dual Lock

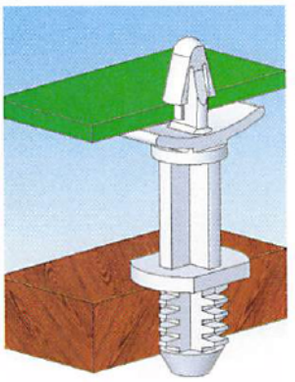

Top Hole:
Snap-lock: .156 ± .003 (4 ± 0.08)
Panel Thickness:
.031 - .078 (0.79 - 1.98)

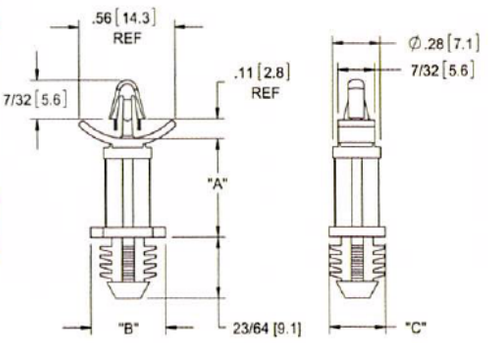

Bottom Hole:
Press-fit: .312 ± .003 (7.92 ± 0.08)
Panel Thickness: 1/4 (6.4) Min.

Mat'l: Nylon 6/6, RMS-01* Color: Natural	Standard Pack: 1,000 per bag		
	"A" Standoff Height ± .015 (0.4)	"B" ± .015 (0.4)	"C" ± .015 (0.4)
BHDL-4-01	1/4 (6.4)	7/16 (11.1)	5/16 (7.9)
BHDL-6-01	3/8 (9.5)		
BHDL-8-01	1/2 (12.7)		
BHDL-10-01	5/8 (15.9)		
BHDL-12-01	3/4 (19.1)		
BHDL-14-01	7/8 (22.2)		
*Available in UL94 V0 material by special order. To order, replace -01 with -19.			
Press-fit for .250 (6.35) hole available by special order.			

Features

- Flexible ribs lock into round, oval, threaded, punched or drilled blind holes.

-800-621-1892
Get quote
Angic Global Solutions 1-888-872-0690
https://www.AngicGlobal.com Sales@AngicGlobal.com

SP/MSPE
Support Post

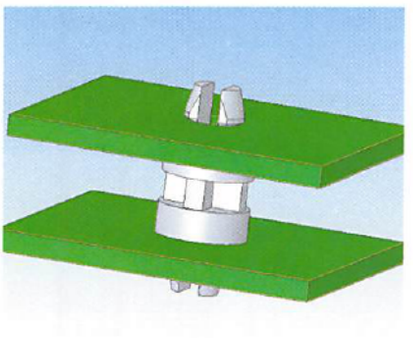

Features

- One piece design eliminates the need for screws, nuts and washers

SP1

Top Hole: Snap-lock: .156 ± .003 (4 ± 0.08)
Panel Thickness: .062 (1.57)

Fig. 1

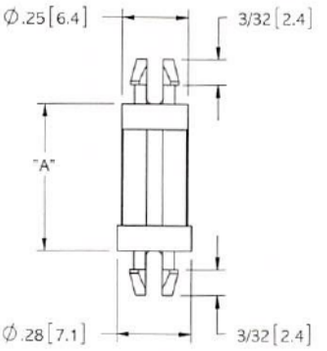

Bottom Hole: Snap-lock: .156 ± .003 (4 ± 0.08)
Panel Thickness: .062 (1.57)

SP2

Top Hole: Snap-lock: .187 ± .003 (4.75 ± 0.08)
Panel Thickness: .062 (1.57)

Fig. 2

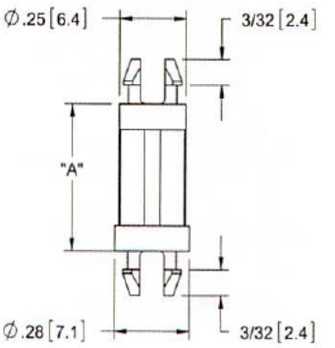

Bottom Hole: Snap-lock: .187 ± .003 (4.75 ± 0.08)
Panel Thickness: .062 (1.57)

SP3

Top Hole: Snap-lock: .156 ± .003 (4 ± 0.08)
Panel Thickness: .062 (1.57)

Fig. 3

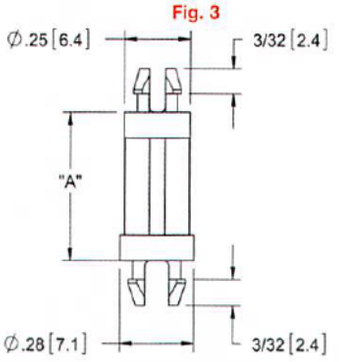

Bottom Hole: Snap-lock: .187 ± .003 (4.75 ± 0.08)
Panel Thickness: .062 (1.57)

MSPE

NEW

Top Hole: Snap-fit: .152 ± .002 (3.9 ± 0.05)
Panel Thickness: .062 (1.57)

Fig. 4

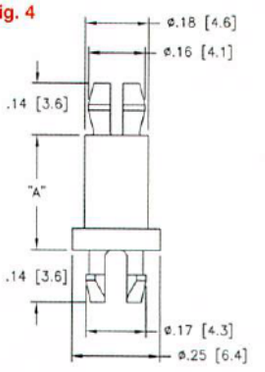

Bottom Hole: Snap-lock: .152 ± .002 (3.9 ± 0.05)
Panel Thickness: .062 (1.57)

SP1 (Fig. 1)	SP2 (Fig. 2)	SP3 (Fig. 3)	MSPE (Fig. 4)		Standard Pack: 1,000 per bag
Mat'l: Nylon 6/6, RMS-01* Color: Natural	Mat'l: Nylon 6/6, RMS-01* Color: Natural	Mat'l: Nylon 6/6, RMS-01* Color: Natural	Mat'l: Nylon 6/6, RMS-01 Color: Natural	Mat'l: Nylon 6/6, RMS-19 Color: Natural	"A" Standoff Height ± .015 (0.4)
Not Available	Not Available	Not Available	MSPE-2-01	MSPE-2-19	1/8 (3.2)
SP1-3-01	SP2-3-01	SP3-3-01	MSPE-3-01	MSPE-3-19	3/16 (4.8)
SP1-4-01	SP2-4-01	SP3-4-01	MSPE-4-01	MSPE-4-19	1/4 (6.4)
Special Order	Special Order	Special Order	MSPE-5-01	MSPE-5-19	5/16 (7.9)
SP1-6-01	SP2-6-01	SP3-6-01	MSPE-6-01	MSPE-6-19	3/8 (9.5)
Special Order	Special Order	Special Order	MSPE-7-01	MSPE-7-19	7/16 (11.1)
SP1-8-01	SP2-8-01	SP3-8-01	MSPE-8-01	MSPE-8-19	1/2 (12.7)
SP1-10-01	SP2-10-01	SP3-10-01	MSPE-10-01	MSPE-10-19	5/8 (15.9)
Special Order	Special Order	Special Order	MSPE-11-01	MSPE-11-19	11/16 (17.5)
SP1-12-01	SP2-12-01	SP3-12-01	MSPE-12-01	MSPE-12-19	3/4 (19.1)
SP1-14-01	SP2-14-01	SP3-14-01	MSPE-14-01	MSPE-14-19	7/8 (22.2)
SP1-16-01	SP2-16-01	SP3-16-01	Special Order	Special Order	1 (25.4)

*Available in UL94 V0 material by special order. To order, replace -01 with -19.

539-4060 Sam
ANGIC
Get quote
Angic Global Solutions 1-888-872-0690
https://www.AngicGlobal.com Sales@AngicGlobal.com

A

MSP
Mini Support Post

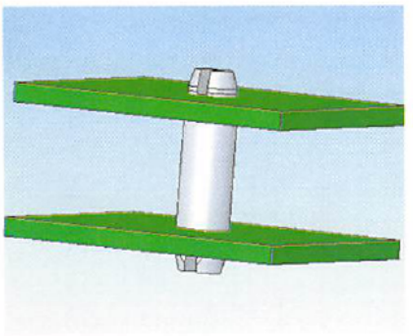

Features

- PCB Mount is snap-fit, chassis mount is snap-lock
- Board mount end is releasable

MSP

Top Hole: Snap-fit: .152 ± .002 (3.86 ± 0.05)
Panel Thickness: .062 (1.57)

Fig. 1

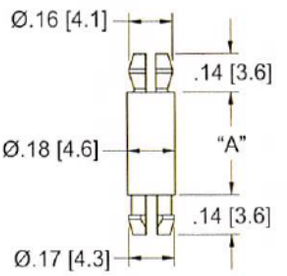

Bottom Hole: Snap-lock: .152 ± .002 (3.86 ± 0.05)
Panel Thickness: .062 (1.57)

MSPM

Top Hole: Snap-fit: .125 ± .002 (3.18 ± 0.05)
Panel Thickness: .062 (1.57)

Fig. 2

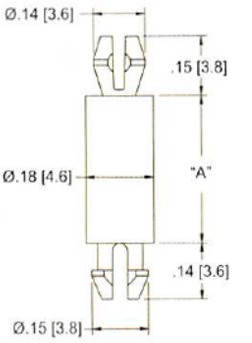

Bottom Hole: Snap-lock: .125 ± .002 (3.18 ± 0.05)
Panel Thickness: .062 (1.57)

DLMSP

Top Hole: Snap-lock: .152 ± .002 (3.86 ± 0.05)
Panel Thickness: .062 (1.57)

Fig. 3

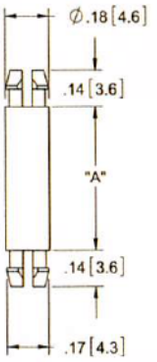

Bottom Hole: Snap-lock: .152 ± .002 (3.86 ± 0.05)
Panel Thickness: .062 (1.57)

DLMSPM

Top Hole: Snap-lock: .125 ± .002 (3.18 ± 0.05)
Panel Thickness: .062 (1.57)

Fig. 4

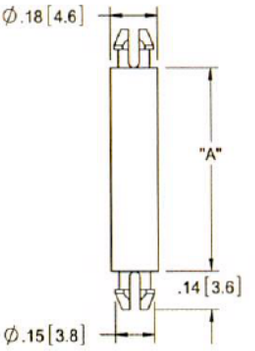

Bottom Hole: Snap-lock: .125 ± .002 (3.18 ± 0.05)
Panel Thickness: .062 (1.57)

DLCBST

Top Hole: Snap-lock: .100 ± .002 (2.54 ± 0.05)
Panel Thickness: .064 (1.63) Max.

Fig. 5

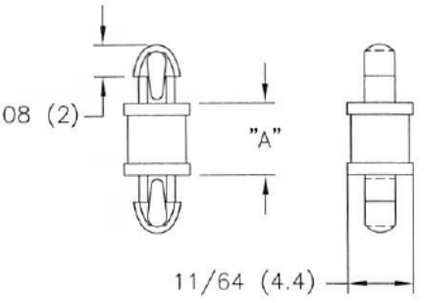

Bottom Hole: Snap-lock: .100 ± .002 (2.54 ± 0.05)
Panel Thickness: .064 (1.63) Max.

MSP (Fig. 1)		MSPM (Fig. 2)		DLMSP (Fig. 3)	DLMSPM (Fig. 4)	DLCBST (Fig. 5)	Standard Pack: 1,000 per bag
Mat'l: Nylon 6/6, RMS-01 Color: Natural	Mat'l: Nylon 6/6, RMS-19 Color: Natural	Mat'l: Nylon 6/6, RMS-01 Color: Natural	Mat'l: Nylon 6/6, RMS-19 Color: Natural	Mat'l: Nylon 6/6, RMS-01* Color: Natural	Mat'l: Nylon 6/6, RMS-01* Color: Natural	Mat'l: Nylon 6/6, RMS-01* Color: Natural	"A" Standoff Height ± .015 (0.4)
Not Available	Not Available	Not Available	Not Available	Not Available	Not Available	DLCBST-1-01	1/16 (1.6)
MSP-2-01	MSP-2-19	MSPM-2-01	MSPM-2-19	DLMSP-2-01	DLMSPM-2-01	DLCBST-2-01	1/8 (3.2)
MSP-3-01	MSP-3-19	MSPM-3-01	MSPM-3-19	DLMSP-3-01	DLMSPM-3-01	DLCBST-3-01	3/16 (4.8)
MSP-4-01	MSP-4-19	MSPM-4-01	MSPM-4-19	DLMSP-4-01	DLMSPM-4-01	DLCBST-4-01	1/4 (6.4)
MSP-5-01	MSP-5-19	MSPM-5-01	MSPM-5-19	DLMSP-5-01	DLMSPM-5-01	DLCBST-5-01	5/16 (7.9)
MSP-6-01	MSP-6-19	MSPM-6-01	MSPM-6-19	DLMSP-6-01	DLMSPM-6-01	DLCBST-6-01	3/8 (9.5)
MSP-7-01	MSP-7-19	MSPM-7-01	MSPM-7-19	DLMSP-7-01	DLMSPM-7-01	DLCBST-7-01	7/16 (11.1)
MSP-8-01	MSP-8-19	MSPM-8-01	MSPM-8-19	DLMSP-8-01	DLMSPM-8-01	DLCBST-8-01	1/2 (12.7)
MSP-9-01	MSP-9-19	MSPM-9-01	MSPM-9-19	DLMSP-9-01	DLMSPM-9-01	DLCBST-9-01	9/16 (14.3)
MSP-10-01	MSP-10-19	MSPM-10-01	MSPM-10-19	DLMSP-10-01	DLMSPM-10-01	DLCBST-10-01	5/8 (15.9)
MSP-11-01	MSP-11-19	Not Available	Not Available	Not Available	Not Available	Not Available	11/16 (17.5)
MSP-12-01	MSP-12-19	MSPM-12-01	MSPM-12-19	DLMSP-12-01	DLMSPM-12-01	Not Available	3/4 (19.1)
MSP-13-01	MSP-13-19	MSPM-13-01	MSPM-13-19	Not Available	DLMSPM-13-01	Not Available	13/16 (20.6)
MSP-14-01	MSP-14-19	MSPM-14-01	MSPM-14-19	DLMSP-14-01	DLMSPM-14-01	Not Available	7/8 (22.2)
MSP-16-01	MSP-16-19	MSPM-16-01	MSPM-16-19	DLMSP-16-01	DLMSPM-16-01	Not Available	1 (25.4)
MSP-18-01	MSP-18-19	MSPM-18-01	MSPM-18-19	DLMSP-18-01	DLMSPM-18-01	Not Available	1-1/8 (28.6)
MSP-20-01	MSP-20-19	MSPM-20-01	MSPM-20-19	DLMSP-20-01	DLMSPM-20-01	Not Available	1-1/4 (31.7)
MSP-22-01	MSP-22-19	MSPM-22-01	MSPM-22-19	DLMSP-22-01	DLMSPM-22-01	Not Available	1-3/8 (34.9)
MSP-24-01	MSP-24-19	MSPM-24-01	MSPM-24-19	DLMSP-24-01	DLMSPM-24-01	Not Available	1-1/2 (38.1)

*Available in UL94 V0 material by special order. To order, replace -01 with -19.

800-621-1892
ANGIC
Get quote
Angic Global Solutions 1-888-872-0690
https://www.AngicGlobal.com Sales@AngicGlobal.com

LMSP
Locking Miniature Support Post

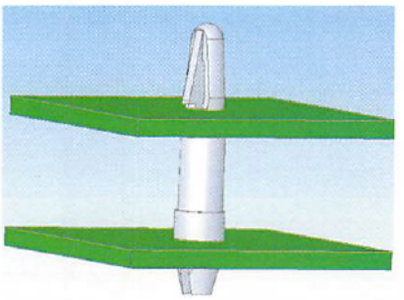

Top Hole: Snap-lock: .125 ± .002 (3.18 ± 0.05)
Panel Thickness: .062 (1.57)

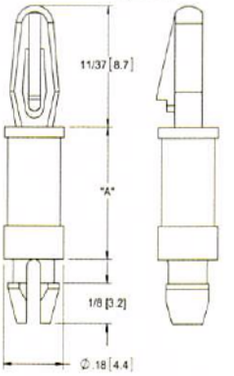

Bottom Hole: Snap-lock: .125 ± .002 (3.18 ± 0.05)
Panel Thickness: .062 (1.57)

Mat'l: Nylon 6/6, RMS-01 Color: Natural	Mat'l: Nylon 6/6, RMS-19 Color: Natural	Standard Pack: 1,000 per bag "A" Standoff Height ± .015 (0.4)
LMSP-2-01	LMSP-2-19	1/8 (3.2)
LMSP-3-01	LMSP-3-19	3/16 (4.8)
LMSP-4-01	LMSP-4-19	1/4 (6.4)
LMSP-5-01	LMSP-5-19	5/16 (7.9)
LMSP-6-01	LMSP-6-19	3/8 (9.5)
LMSP-7-01	LMSP-7-19	7/16 (11.1)
LMSP-8-01	LMSP-8-19	1/2 (12.7)
LMSP-9-01	LMSP-9-19	9/16 (14.3)
LMSP-10-01	LMSP-10-19	5/8 (15.9)
LMSP-12-01	LMSP-12-19	3/4 (19.1)
LMSP-14-01	LMSP-14-19	7/8 (22.2)

DLSP
Dual Locking Support Post Metric

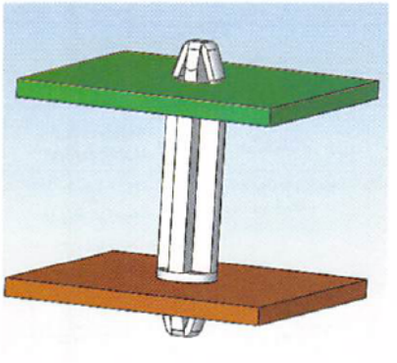

Features
- Installs quickly by hand

Top Hole: Snap-lock: 4 ± 0.08mm
Panel Thickness: 1.6mm

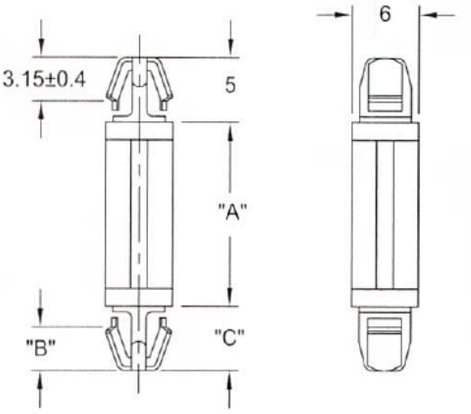

Bottom Hole: Snap-lock: DLSP-1: 4 ± 0.08mm.
DLSP-3: 4.8 ± 0.08mm
Panel Thickness: 1.6mm

DLSP-1	DLSP-3	Standard Pack: 1,000 per bag
Mat'l: Nylon 6/6, RMS-01* Color: Natural	Mat'l: Nylon 6/6, RMS-01* Color: Natural	"A" Standoff Height ± 0.4
"B" = 3.15±0.4 "C" = 5	"B" = 3.7±0.4 "C" = 5.5	
DLSP-1-3M-01	DLSP-3-3M-01	3
DLSP-1-4M-01	DLSP-3-4M-01	4
DLSP-1-6M-01	DLSP-3-6M-01	6
DLSP-1-8M-01	DLSP-3-8M-01	8
DLSP-1-10M-01	DLSP-3-10M-01	10
DLSP-1-12M-01	DLSP-3-12M-01	12
DLSP-1-14M-01	DLSP-3-14M-01	14
DLSP-1-16M-01	DLSP-3-16M-01	16
DLSP-1-18M-01	DLSP-3-18M-01	18
All dimensions in millimeters		
*Available in UL94 V0 material by special order. To order, replace -01 with -19.		
Available to snap into a 4.8mm hole on both ends by special order. To order, use part number DLSP-2-XX-XX.		
Available by special order; 5,000 piece minimum.		

KSLSP
Key Slot Locking Support Post

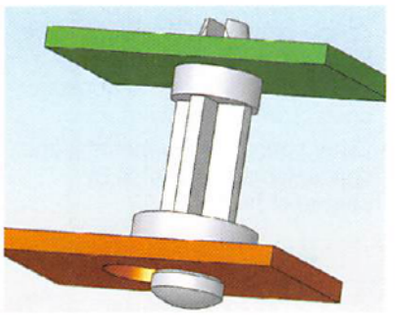

Features
- Chassis mount end slides in and is easily removed for repairs or changes
- Protrusion of only 3/32 (2.4) on underside of chassis

Top Hole: Snap-lock: KSLSP1: .156 ± .003 (4 ± 0.08)
KSLSP2: .187 ± .003 (4.75 ± 0.08)
Panel Thickness: .062 (1.57)

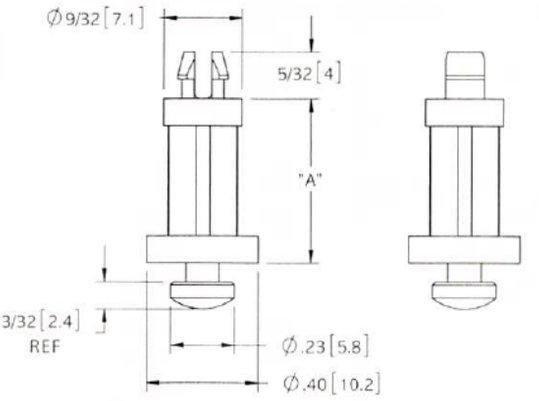

Bottom Hole: See Mounting Key Slot Detail
Panel Thickness: .062 (1.57)

KSLSP1	KSLSP2	Standard Pack: 1,000 per bag
Mat'l: Nylon 6/6, RMS-01* Color: Natural	Mat'l: Nylon 6/6, RMS-01* Color: Natural	"A" Standoff Height ± .015 (0.4)
KSLSP1-3-01	KSLSP2-3-01	3/16 (4.8)
KSLSP1-4-01	KSLSP2-4-01	1/4 (6.4)
KSLSP1-6-01	KSLSP2-6-01	3/8 (9.5)
KSLSP1-8-01	KSLSP2-8-01	1/2 (12.7)
KSLSP1-10-01	KSLSP2-10-01	5/8 (15.9)
*Available in UL94 V0 material by special order. To order, replace -01 with -19.		

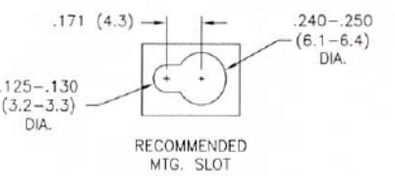

539-4060 Sam
Get quote
Angic Global Solutions 1-888-872-0690
https://www.AngicGlobal.com Sales@AngicGlobal.com

A

MDLSP 1 & 2
Mini Dual Locking Support Post

Top Hole: Snap-lock: MDLSP1: .098 ± .002 (2.5 ± 0.05)
MDLSP2: .138 ± .002 (3.5 ± 0.05)
Panel Thickness: .062 (1.57)

Fig. 1

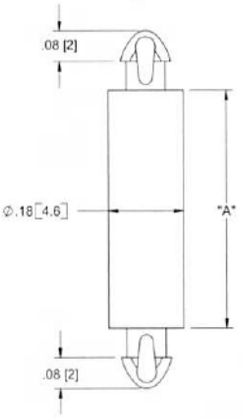

Fig. 2

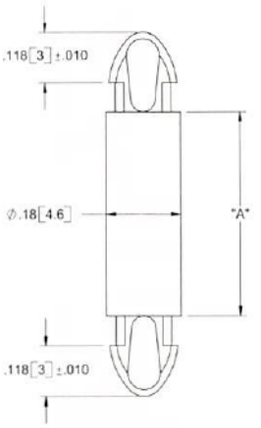

Bottom Hole: Snap-lock: MDLSP1: .098 ± .002 (2.5 ± 0.05)
MDLSP2: .138 ± .002 (3.5 ± 0.05)
Panel Thickness: .062 (1.57)

MDLSP1 (Fig. 1)	MDLSP2 (Fig. 2)	Standard Pack: 1,000 per bag
Mat'l: Nylon 6/6, RMS-01* Color: Natural	Mat'l: Nylon 6/6, RMS-01* Color: Natural	"A" Standoff Height ± .015 (0.4)
MDLSP1-02M-01	MDLSP2-02M-01	.078 (2)
MDLSP1-03M-01	MDLSP2-03M-01	.118 (3)
MDLSP1-04M-01	MDLSP2-04M-01	.156 (4)
MDLSP1-05M-01	MDLSP2-05M-01	.197 (5)
MDLSP1-06M-01	MDLSP2-06M-01	.236 (6)
MDLSP1-07M-01	MDLSP2-07M-01	.276 (7)
MDLSP1-08M-01	MDLSP2-08M-01	.314 (8)
MDLSP1-09M-01	MDLSP2-09M-01	.354 (9)
MDLSP1-10M-01	MDLSP2-10M-01	.394 (10)
MDLSP1-12M-01	MDLSP2-12M-01	.472 (12)
MDLSP1-14M-01	MDLSP2-14M-01	.551 (14)
MDLSP1-16M-01	MDLSP2-16M-01	.630 (16)
MDLSP1-18M-01	MDLSP2-18M-01	.709 (18)
MDLSP1-20M-01	MDLSP2-20M-01	.787 (20)
MDLSP1-22M-01	MDLSP2-22M-01	.866 (22)
*Available in UL94 V0 material by special order. To order, replace -01 with -19.		
MDLSPKX-XXM-01 with top to fit in a .141 (3.6) thick panel available by special order only. Also available in UL94 V0 material.		

MDLSP3
Mini Dual Lock Support Post

NEW

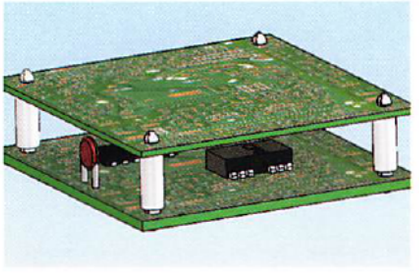

Features
- Teardrop style mounting ends eases insertion and increases holding power with little protrusion under the chassis

Top Hole: Snap-lock: .098 ± .002 (2.5 ± 0.05)
Panel Thickness: .063 (1.6)

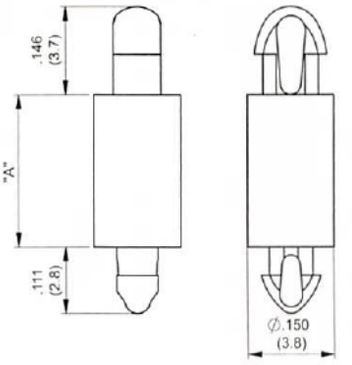

Bottom Hole: Snap-lock: .08 ± .002 (2 ± 0.05)
Panel Thickness: .04 (1)

MDLSP3	Standard Pack: 1,000 per bag
Mat'l: Nylon 6/6, RMS-01* Color: Natural	"A" Standoff Height
MDLSP3-1-01	.063 (1.6)
MDLSP3-2-01	.126 (3.2)
MDLSP3-3-01	.189 (4.8)
MDLSP3-4-01	.252 (6.4)
MDLSP3-5-01	.311 (7.9)
MDLSP3-6-01	.374 (9.5)
*Available in UL94 V0 material by special order. To order, replace -01 with -19.	

TCS
Touch Control Spacer

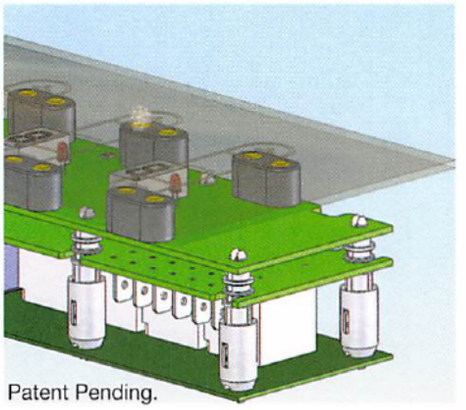

Patent Pending.

Top Hole: Snap-lock: .165 ± .002 (4.2 ± 0.05)
Panel Thickness: .063 ± .002 (1.6 ± 0.05)

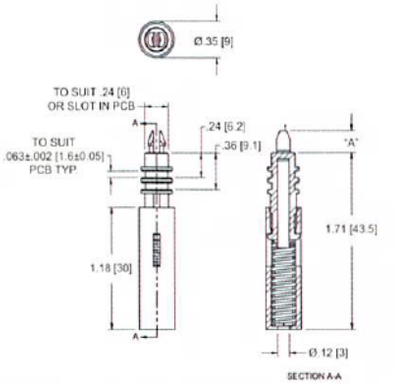

Bottom Hole: To locate over a vertical tab

Features
- Spring provides continuous force to light sensors mounted onto a PCB so that they are in constant contact with the cover
- Other spring forces, mounts, and spacer lengths available by special order

Standard Pack: 500 per bag			
Color: Natural	"A"	Spacer Material	Spring Material
TCS-1	.21 (5.4)	Nylon 6/6, RMS-01	Mild Steel S300 Pb, RMS-230
TCS-2		Nylon 6/6, RMS-19	
TCS-3	.17 (4.2)	Nylon 6/6, RMS-01	
TCS-4		Nylon 6/6, RMS-19	
Travel: .12 (3)			

-800-621-1892
ANGIC GLOBAL SOLUTIONS Get quote
Angic Global Solutions 1-888-872-0690
https://www.AngicGlobal.com Sales@AngicGlobal.com

LCBSB/CBSB
Circuit Board Support on Base

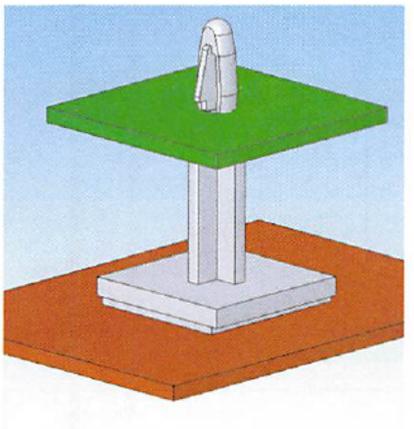

Features

- Eliminates the need for a mounting hole on the chassis

LCBSB

Top Hole: Snap-lock: .156 ± .003 (4 ± 0.08)
Panel Thickness: .062 (1.57)

Fig. 1

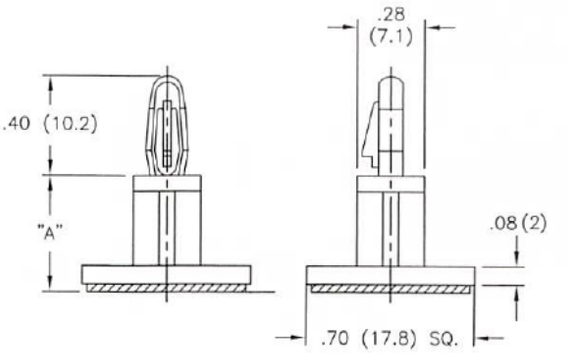

CBSB

Top Hole: Snap-fit: .156 ± .003 (4 ± 0.08)
Panel Thickness: .062 (1.57)

Fig. 2

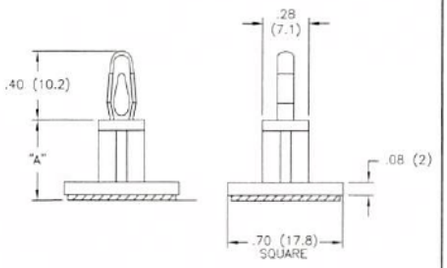

LCBSBM

Top Hole: Snap-lock: .125 ± .002 (3.18 ± 0.05)
Panel Thickness: .062 (1.57)

Fig. 3

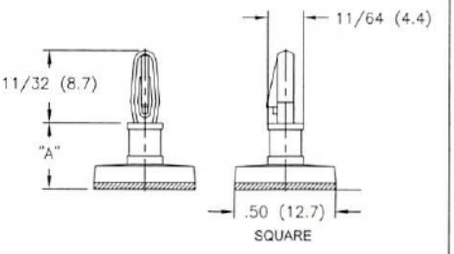

CBSBT

Top Hole: Snap-lock: .100 ± .002 (2.54 ± 0.05)
Panel Thickness: .064 (1.63) Max.

Fig. 4

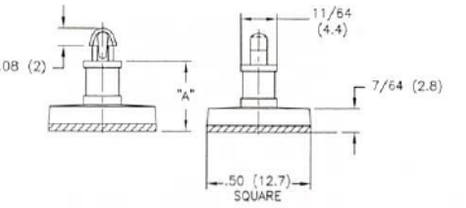

LCBSB (Fig. 1)	CBSB (Fig. 2)	LCBSBM (Fig. 3)	CBSBT (Fig. 4)	Standard Pack: 1,000 per bag
Mat'l: Nylon 6/6, RMS-01* Color: Natural	Mat'l: Nylon 6/6, RMS-01* Color: Natural	Mat'l: Nylon 6/6, RMS-01* Color: Natural	Mat'l: Nylon 6/6, RMS-01* Color: Natural	"A" Standoff Height ± .015 (0.4)
LCBSB-3-01A-RT	CBSB-3-01A-RT	LCBSBM-3-01A-RT	CBSBT-3-01A-RT	3/16 (4.8)
LCBSB-4-01A-RT	CBSB-4-01A-RT	LCBSBM-4-01A-RT	CBSBT-4-01A-RT	1/4 (6.4)
Not Available	Not Available	LCBSBM-5-01A-RT	CBSBT-5-01A-RT	5/16 (7.9)
LCBSB-6-01A-RT	CBSB-6-01A-RT	LCBSBM-6-01A-RT	CBSBT-6-01A-RT	3/8 (9.5)
Special Order	Special Order	LCBSBM-7-01A-RT	CBSBT-7-01A-RT	7/16 (11.1)
LCBSB-8-01A-RT	CBSB-8-01A-RT	LCBSBM-8-01A-RT	CBSBT-8-01A-RT	1/2 (12.7)
Not Available	Not Available	LCBSBM-9-01A-RT	CBSBT-9-01A-RT	9/16 (14.3)
LCBSB-10-01A-RT	CBSB-10-01A-RT	LCBSBM-10-01A-RT	CBSBT-10-01A-RT	5/8 (15.9)
LCBSB-12-01A-RT	CBSB-12-01A-RT	Not Available	Not Available	3/4 (19.1)
LCBSB-14-01A-RT	CBSB-14-01A-RT	Not Available	Not Available	7/8 (22.2)
LCBSB-16-01A-RT	CBSB-16-01A-RT	Not Available	Not Available	1 (25.4)
LCBSB-18-01A-RT	CBSB-18-01A-RT	Not Available	Not Available	1-1/8 (28.6)
*Available in UL94 V0 material by special order. To order, replace -01 with -19.				
Adhesive Backing: RMS-15, 1/32 (0.8) thick double sided adhesive tape with release tab.				
Also available without adhesive by special order; 5,000 piece minimum.				

Metric Lengths	
LCBSB (Fig. 1)	Standard Pack: 1,000 per bag
Mat'l: Nylon 6/6, RMS-01* Color: Blue	"A" Standoff Height ± 0.4
LCBSB-6M-01A-RT	6
LCBSB-8M-01A-RT	8
LCBSB-10M-01A-RT	10
LCBSB-12M-01A-RT	12
LCBSB-14M-01A-RT	14
LCBSB-16M-01A-RT	16
*Available in UL94 V0 material. To order, replace -01 with -19.	
Adhesive Backing: RMS-15, 1/32 (0.8) thick double sided adhesive tape with release tab. Also available without adhesive.	
Available by special order; 5,000 piece minimum.	

539-4060 Sam
Get quote
Angic Global Solutions 1-888-872-0690
https://www.AngicGlobal.com Sales@AngicGlobal.com

A

PST/CPST
Push Spacer Teardrop

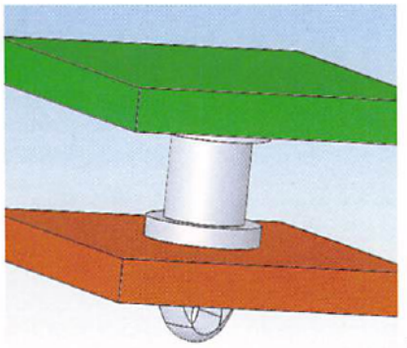

Fig. 1

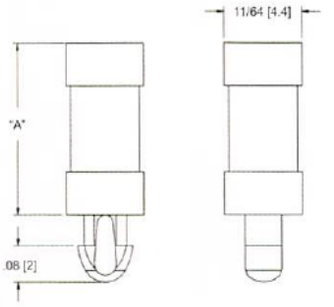

Bottom Hole: Snap-lock: .100 ± .002 (2.54 ± 0.05)
Panel Thickness: .064 (1.63) Max.

Fig. 2

NEW

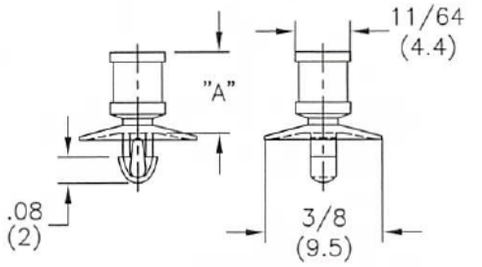

Bottom Hole: Snap-lock: .100 ± .002 (2.54 ± 0.05)
Panel Thickness: .062 (1.57) Max.

Features

- Allows for easy access to the underside of the PCB
- Provides additional support for heavily loaded PCBs
- Teardrop style mounting end eases insertion and increases holding power with little protrusion under the chassis

PST (Fig. 1)	CPST (Fig. 2)	Standard Pack: 1,000 per bag
Mat'l: Nylon 6/6, RMS-01* Color: Natural	Mat'l: Nylon 6/6, RMS-01* Color: Natural	"A" Standoff Height ± .015 (0.4)
PST-1-01	Not Available	1/16 (1.6)
PST-2-01	CPST-2-01	1/8 (3.2)
PST-3-01	CPST-3-01	3/16 (4.8)
PST-4-01	CPST-4-01	1/4 (6.4)
PST-5-01	CPST-5-01	5/16 (7.9)
PST-6-01	CPST-6-01	3/8 (9.5)
PST-7-01	CPST-7-01	7/16 (11.1)
PST-8-01	CPST-8-01	1/2 (12.7)
PST-9-01	CPST-9-01	9/16 (14.3)
PST-10-01	CPST-10-01	5/8 (15.9)
*Available in UL94 V0 material by special order. To order, replace -01 with -19.		

PS
Push Spacer

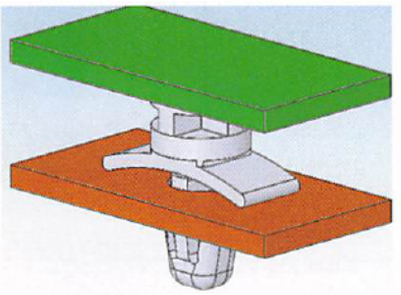

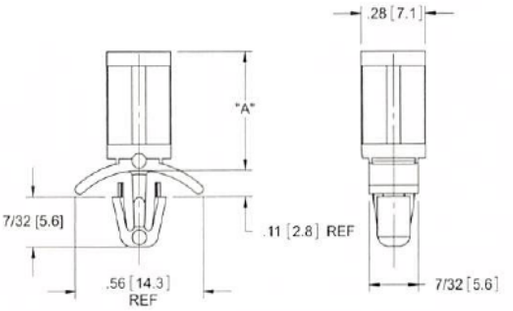

Bottom Hole: Snap-lock: .187 ± .003 (4.75 ± 0.08)
Panel Thickness: .031 - .078 (0.79 - 1.98)

PS		Standard Pack: 1,000 per bag
Mat'l: Nylon 6/6, RMS-01 Color: Natural	Mat'l: Nylon 6/6, RMS-19 Color: Natural	"A" Standoff Height ± .015 (0.4)
PS-3-01	PS-3-19	3/16 (4.8)
PS-4-01	PS-4-19	1/4 (6.4)
PS-6-01	PS-6-19	3/8 (9.5)
PS-7-01	PS-7-19	7/16 (11.1)
PS-8-01	PS-8-19	1/2 (12.7)
PS-10-01	PS-10-19	5/8 (15.9)
PS-12-01	PS-12-19	3/4 (19.1)
PS-14-01	PS-14-19	7/8 (22.2)
Also available for a .078 - .140 (1.98 - 3.56) thick chassis by special order. To order, use P/N: PS-2-XX-XX.		

Features

- The tension wings on the chassis end provide a tight fit

PSM
Mini Push Spacer

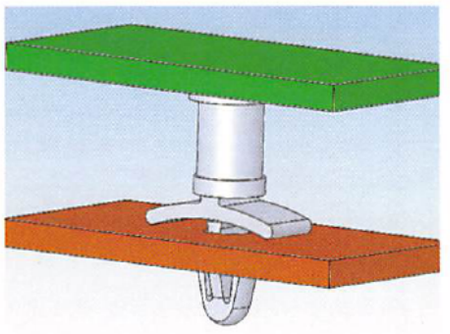

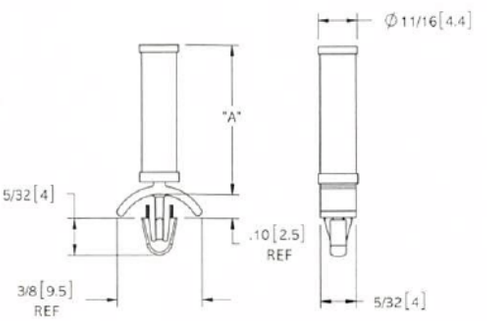

Bottom Hole: Snap-lock: .125 ± .002 (3.18 ± 0.05)
Panel Thickness: .031 - .078 (0.79 - 1.98)

PSM	Standard Pack: 1,000 per bag
Mat'l: Nylon 6/6, RMS-01* Color: Natural	"A" Standoff Height ± .015 (0.4)
PSM-2-01	1/8 (3.2)
PSM-3-01	3/16 (4.8)
PSM-4-01	1/4 (6.4)
PSM-5-01	5/16 (7.9)
PSM-6-01	3/8 (9.5)
PSM-7-01	7/16 (11.1)
PSM-8-01	1/2 (12.7)
PSM-9-01	9/16 (14.3)
PSM-10-01	5/8 (15.9)
*Available in UL94 V0 material by special order. To order, replace -01 with -19.	

800-621-1892
ANGIC
Get quote
Angic Global Solutions 1-888-872-0690
https://www.AngicGlobal.com Sales@AngicGlobal.com

Edition 28

NORTH AMERICAN VERSION

Richco®

Fastening Solutions

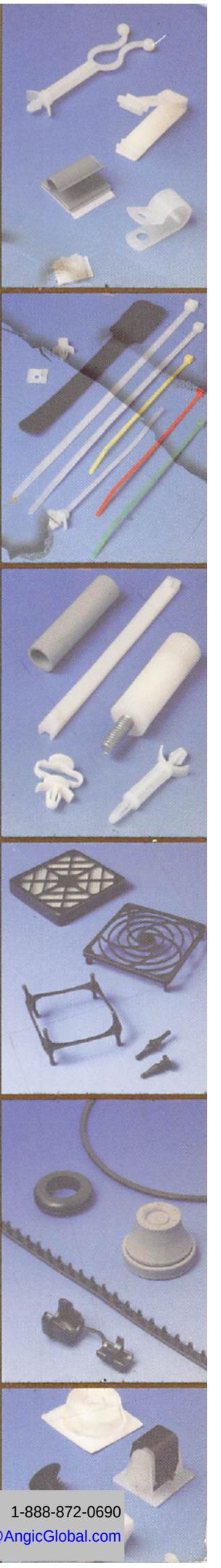

Global Presence. Local Support.

ANGIC GLOBAL SOLUTIONS
Get quote
Angic Global Solutions 1-888-872-0690
https://www.AngicGlobal.com Sales@AngicGlobal.com



Get quote

Angic Global Solutions 1-888-872-0690
https://www.AngicGlobal.com Sales@AngicGlobal.com

CONTENTS

Circuit Board Hardware 1-36

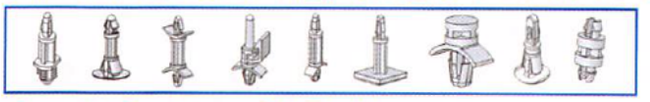

Snap-in, screw-mount & adhesive supports; spacers & stand-offs

Card Guides & Pullers 37-50



Vertical, horizontal & tensioning PC board rack card guides; pullers & ejectors

Rivets, Screws, Washers & Nuts 51-66



Snap-in, push, blind hole & unscrewing rivets; plastic screws, nuts & washers

Motion Control, Bumpers & Feet 67-82



Motion & vibration dampers; bumpers & feet

Fan Accessories 83-90

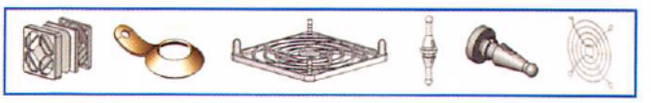

Screens, guards, filters, and other accessories for fans

LED Hardware 91-96

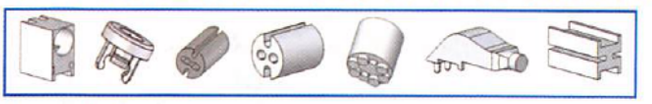

LED mounting and protection hardware; light pipes

Insulators 97-106

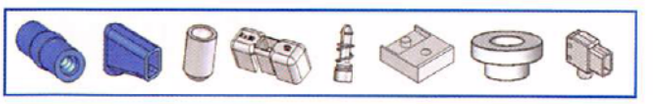

Fuse mounting hardware, transistor insulators, splashproof insulators

Cable Ties & Accessories 107-130

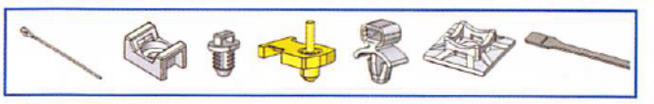

Standard, push mount, screw mount, releasable, hook & loop cable ties; tie holders

Cable Management 131-184

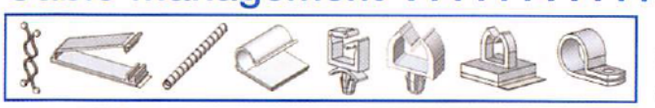

Clips, clamps, wire routing accessories; wraps & ducts

Fiber Management 185-214



Fiber routing and protection accessories

Grommets & Bushings 215-225



Metal & plastic grommeting strips & plug-in grommets; bushings

Thumbnail Index ..... II-IX
General Information X
Conversion Charts 226
RMS 227-234
Capabilities 236-237
Other Richco Literature 238-239
New Products Index 241
Alphabetical Index 242-245
Caster Capabilities 246

A B C D E F G H I J K

539-4060 Sam

Get quote

Angic Global Solutions 1-888-872-0690
https://www.AngicGlobal.com Sales@AngicGlobal.com

Circuit Board Hardware

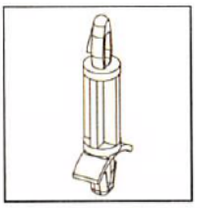
Pages 2-4

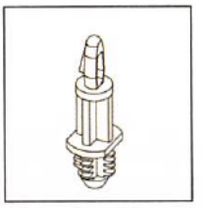
Pages 5, 8

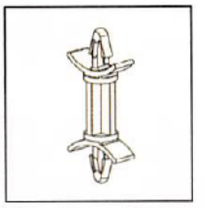
Page 6

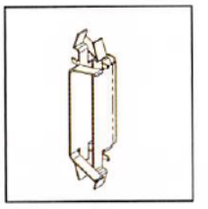
Page 7

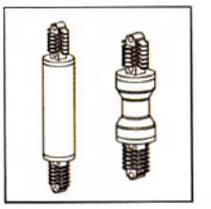
Pages 7, 71

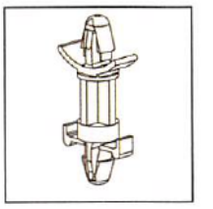
Page 8

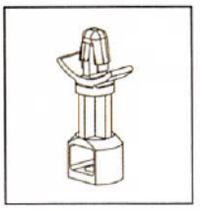
Pages 5, 8

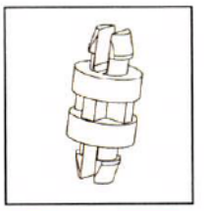
Pages 9, 11

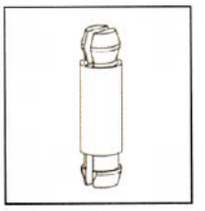
Page 10

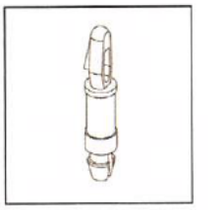
Page 11

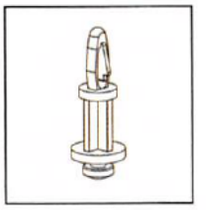
Pages 11, 21

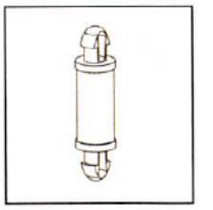
Page 12


Pages 12, 72

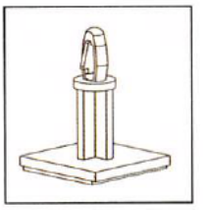
Page 13

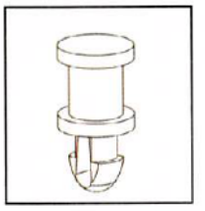
Page 14


Page 15

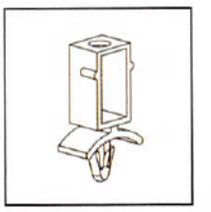
Page 15

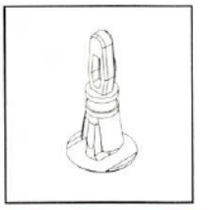
Pages 16, 17

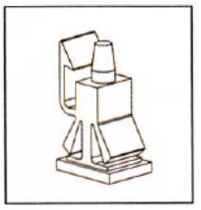
Page 18

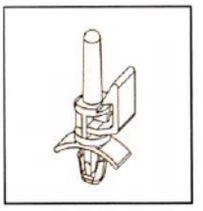
Pages 18-20

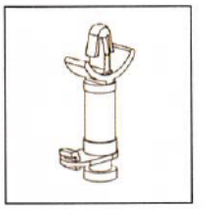
Page 21

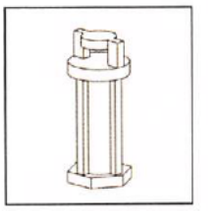
Page 22

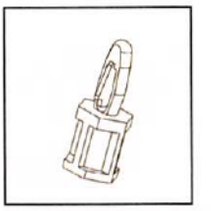
Pages 23, 24

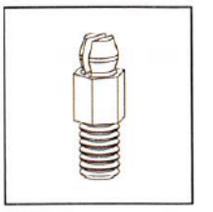
Page 24

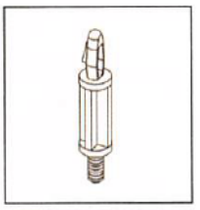
Pages 25, 26

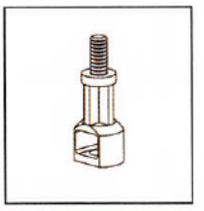
Page 25

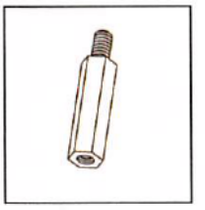
Page 27

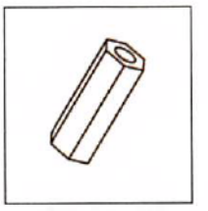
Pages 28, 29

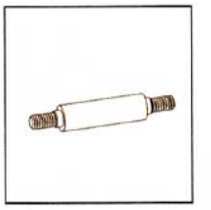
Pages 30, 31

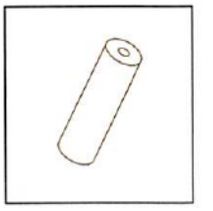
Pages 28, 32, 104


Page 33

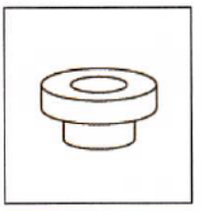
Pages 34, 104

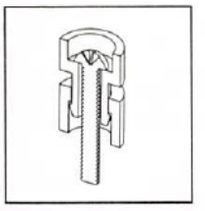
Page 35


Pages 35, 36

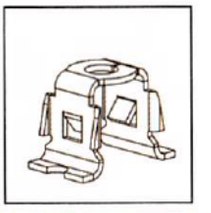
Page 36

-800-621-1892
Get quote
Angic Global Solutions 1-888-872-0690
https://www.AngicGlobal.com Sales@AngicGlobal.com

Card Guides & Pullers

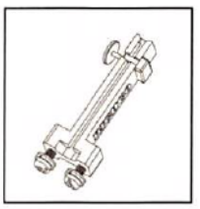

Pages 38, 39

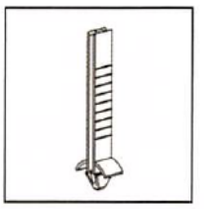

Pages 40-42

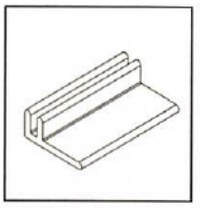

Page 43



Page 43

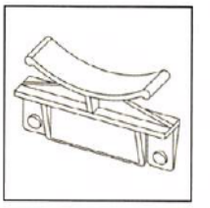

Page 47

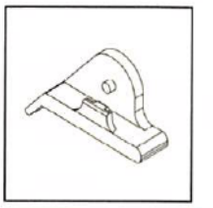

Pages 47-49

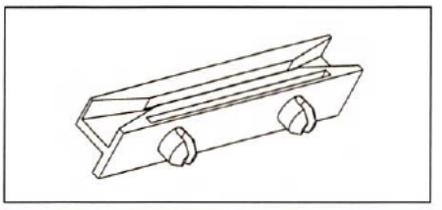

Page 43

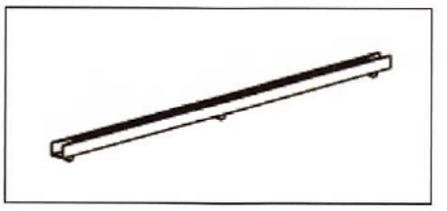

Pages 44-46

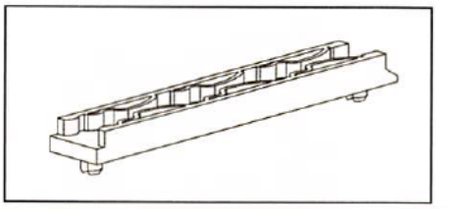

Page 45

Rivets, Screws, Washers & Nuts



Pages 52-54

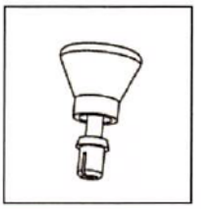

Page 54

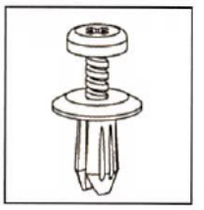

Page 55



Page 55

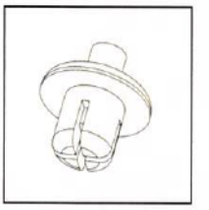

Pages 55, 56

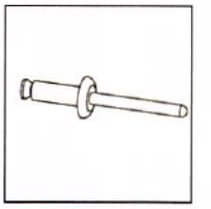

Page 56

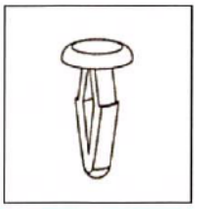

Page 57

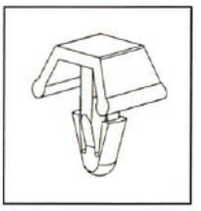

Page 57

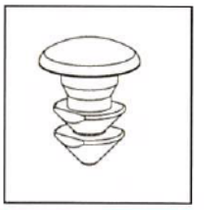

Page 58

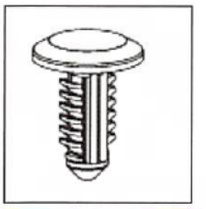

Pages 58. 59

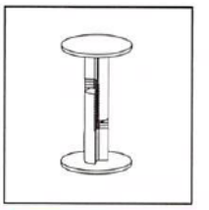

Page 60

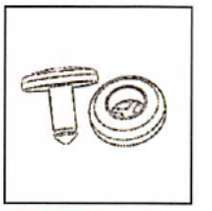

Page 60

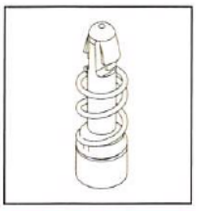

Pages 61, 99

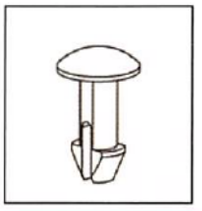

Page 61



Pages 62-64

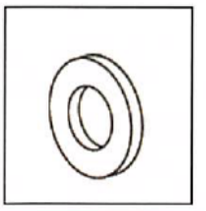

Page 64

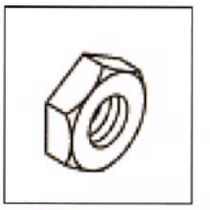

Page 65



Page 65

539-4060 Sam

Get quote

Angic Global Solutions 1-888-872-0690
https://www.AngicGlobal.com Sales@AngicGlobal.com

Motion Control, Bumpers & Feet

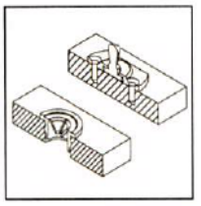
Page 68

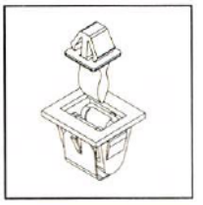
Page 69

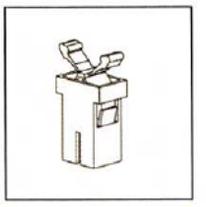
Page 69

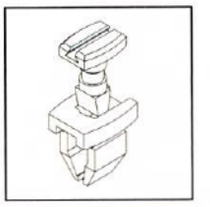
Page 70

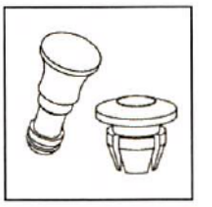
Page 70

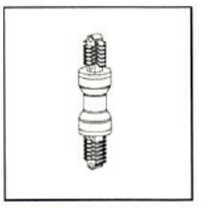
Page 71

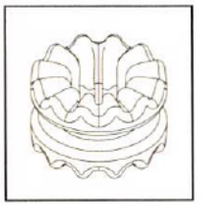
Page 72


Page 72

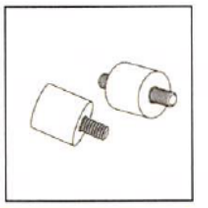
Page 73

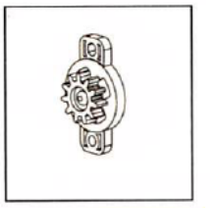
Pages 74-75

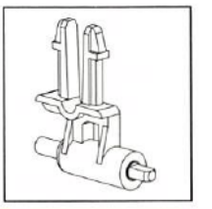
Page 75

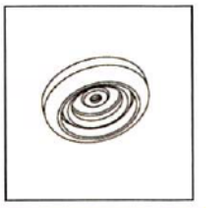
Pages 76, 77

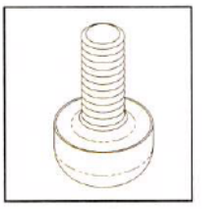
Page 77

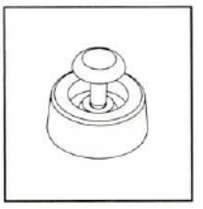
Pages 77, 78

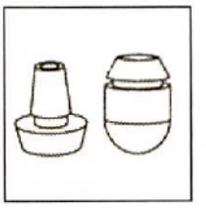
Page 79

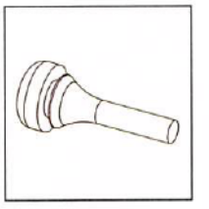
Page 79

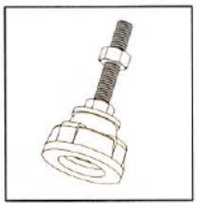
Page 80

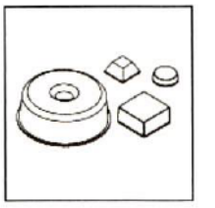
Pages 80, 81

Fan Accessories

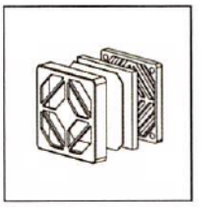
Page 85

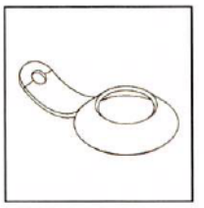
Page 85

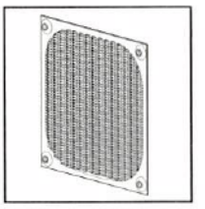
Page 86


Page 87

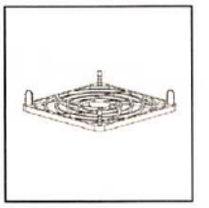
Page 88

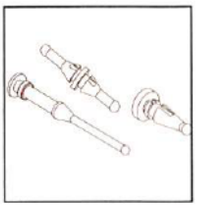
Pages 89-90

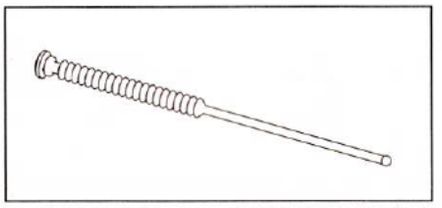
Page 88

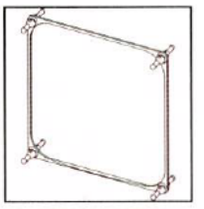
Page 89

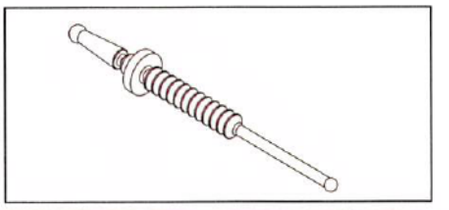
Page 90

-800-621-1892

Get quote

Angic Global Solutions 1-888-872-0690
https://www.AngicGlobal.com Sales@AngicGlobal.com

LED Hardware



Pages 92-94

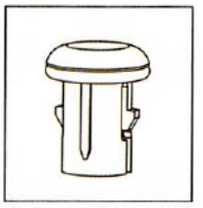

Page 94

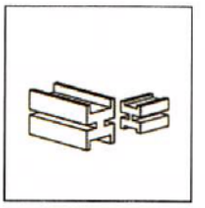

Page 93

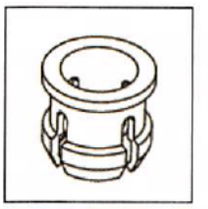

Page 95

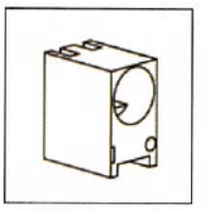

Page 96

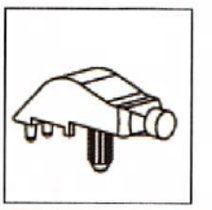

Page 96

Insulators

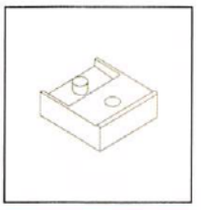

Page 98

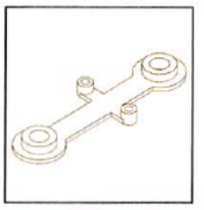

Page 99



Pages 61, 99

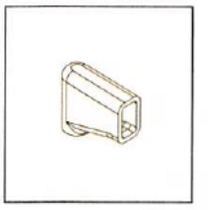

Pages 100-102

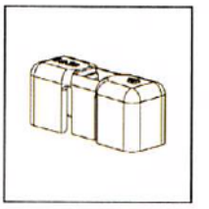

Pages 102, 103

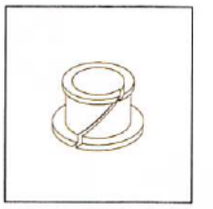

Page 105

Cable Ties & Accessories

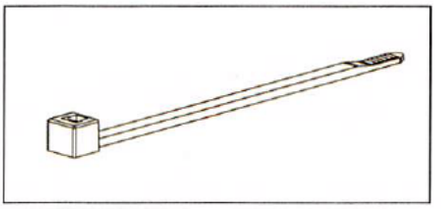

Pages 108, 109, 111



Page 110

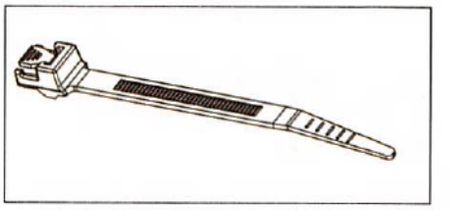

Page 112

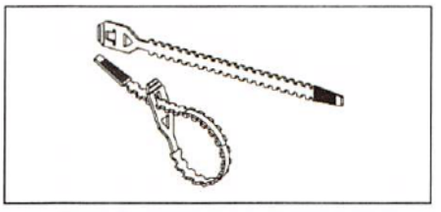

Pages 113, 114

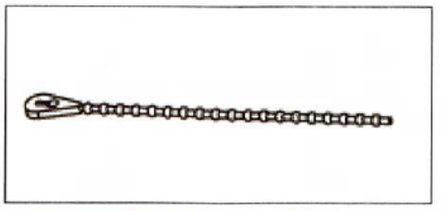

Pages 113, 114

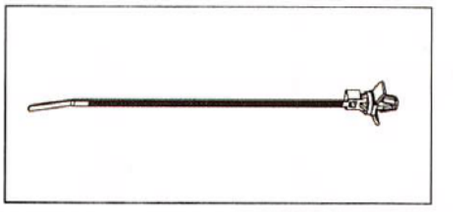

Pages 115-117

539-4060 Sam
Get quote
Angic Global Solutions 1-888-872-0690
https://www.AngicGlobal.com Sales@AngicGlobal.com

Cable Ties & Accessories

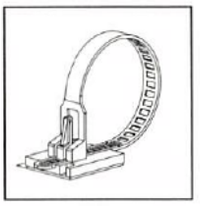

Pages 118, 120

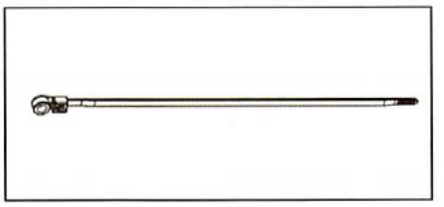

Page 119

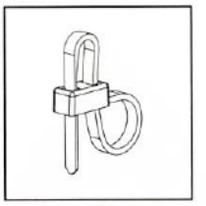

Page 120

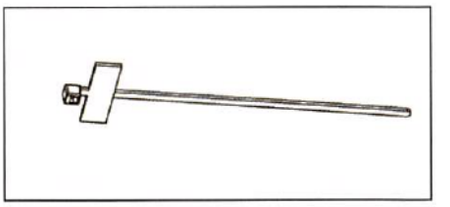

Page 121

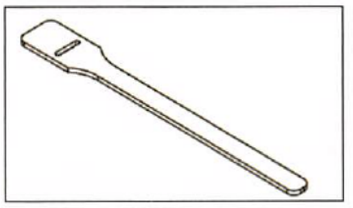

Pages 121-123

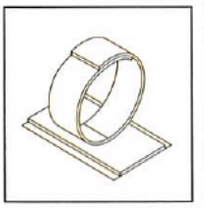

Page 123

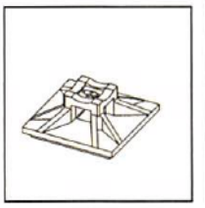

Page 124

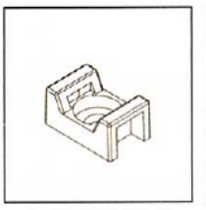

Pages 123, 125

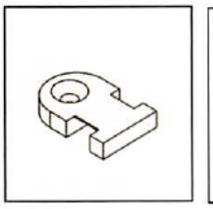

Page 126

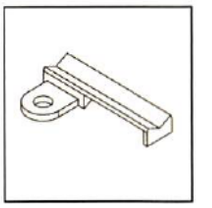

Page 126

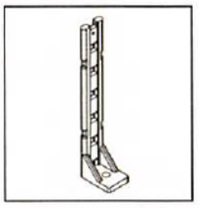

Page 127

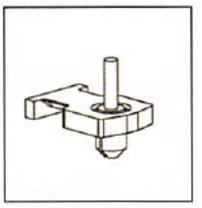

Page 127

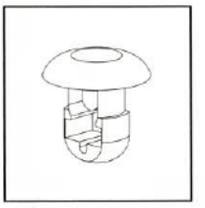

Page 128

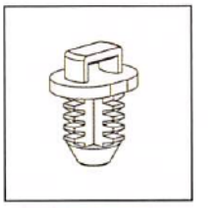

Page 128

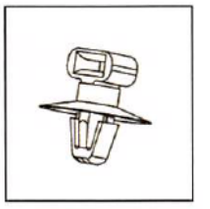

Pages 128, 129

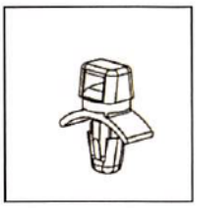

Page 129

Cable Management

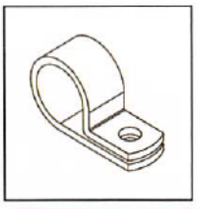

Pages 132-134

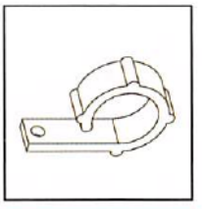

Page 133

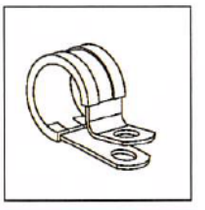

Page 134

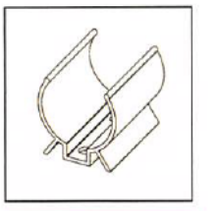

Page 135

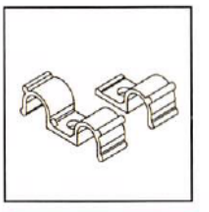

Page 136



Page 136

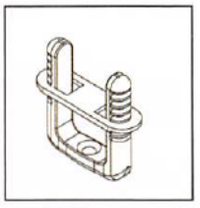

Page 137



Page 138

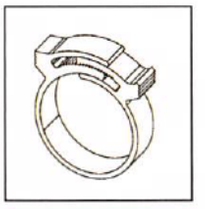

Page 139

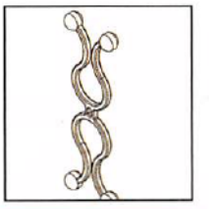

Page 139



Page 140

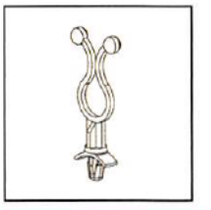

Pages 141-142 145-146

800-621-1892
Get quote
Angic Global Solutions 1-888-872-0690
https://www.AngicGlobal.com Sales@AngicGlobal.com

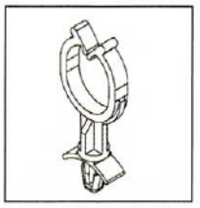
Page 143

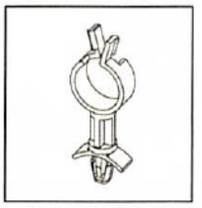
Pages 143-144

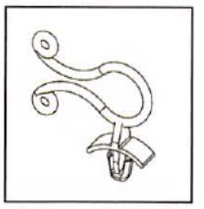
Page 144

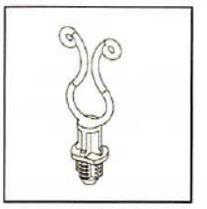
Page 145

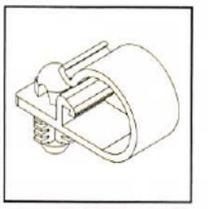
Page 146

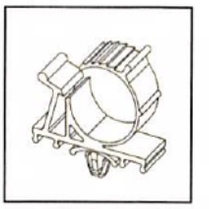
Page 147

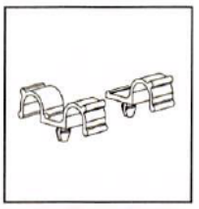
Page 147

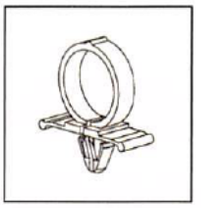
Page 148

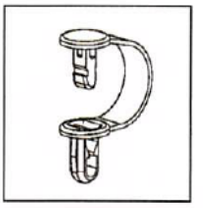
Page 148

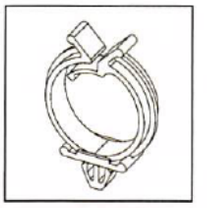
Page 149

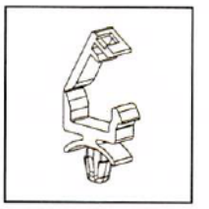
Pages 149, 154

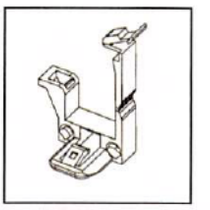
Page 150

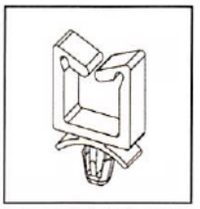
Pages 150, 151, 153

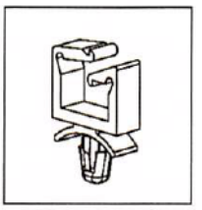
Pages 151, 153

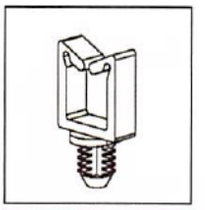
Page 152

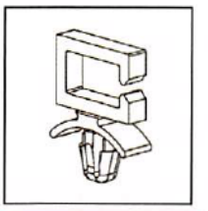
Page 152

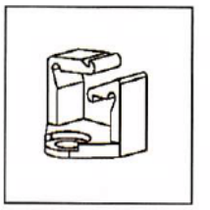
Page 153

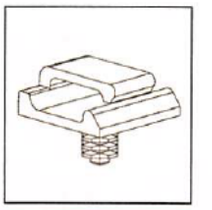
Page 154

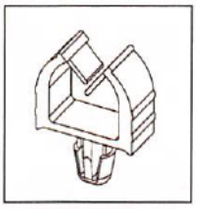
Pages 155, 156

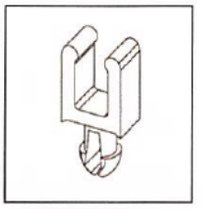
Page 156

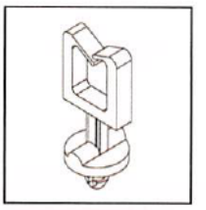
Page 156

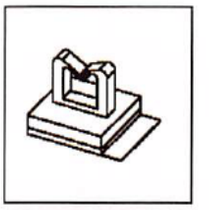
Page 157

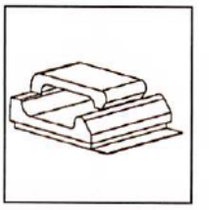
Page 157

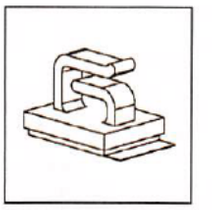
Page 157


Page 158

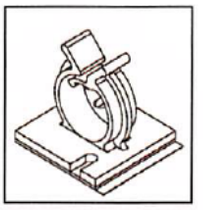
Page 158

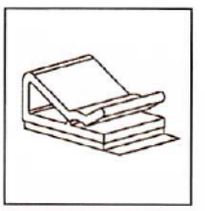
Page 159

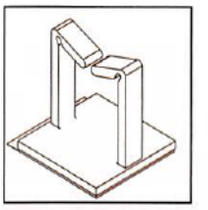
Page 159

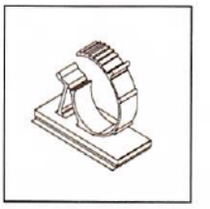
Page 160

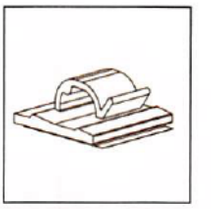
Page 161

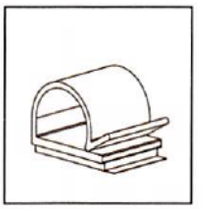
Page 162

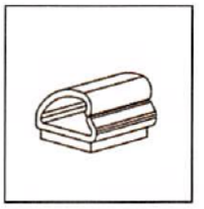
Page 163

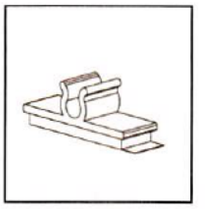
Page 164

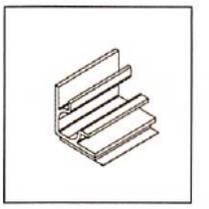
Page 164

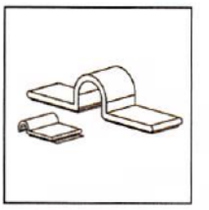
Page 165

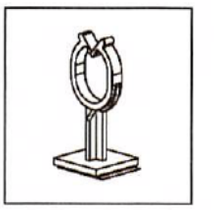
Page 165

539-4060 Sam
Get quote
Angic Global Solutions 1-888-872-0690
https://www.AngicGlobal.com Sales@AngicGlobal.com

Cable Management

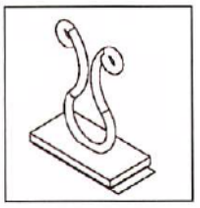
Page 166


Page 167

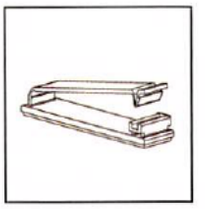
Pages 168, 171

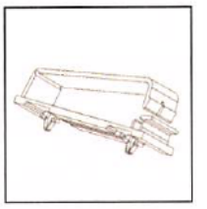
Page 168

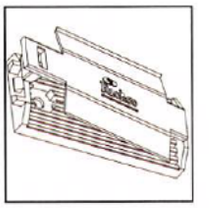
Page 169

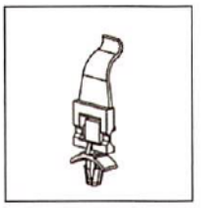
Page 169

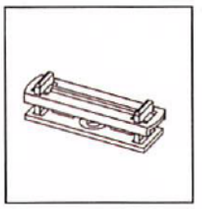
Page 170

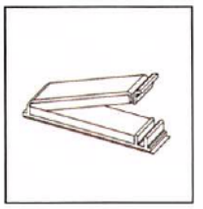
Pages 168, 171

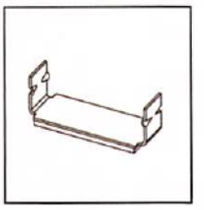
Page 172

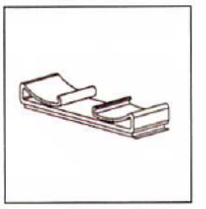
Page 172

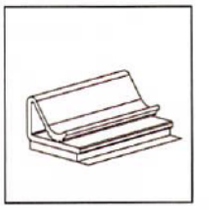
Page 173

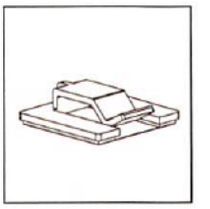
Page 173

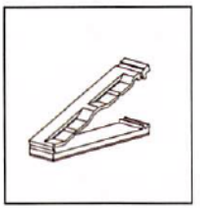
Page 174

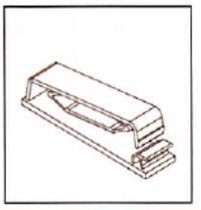
Page 174

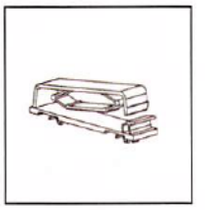
Page 174

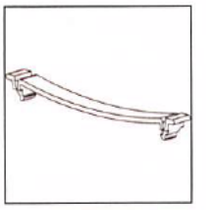
Page 175

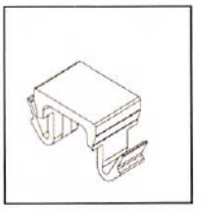
Page 175

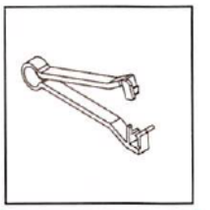
Page 175

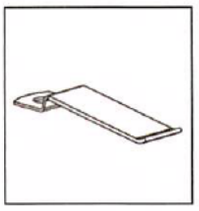
Page 176

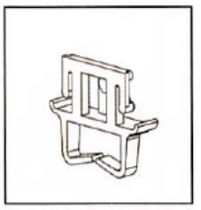
Page 177

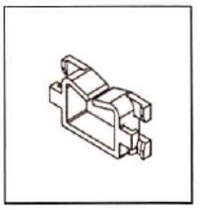
Pages 177-178

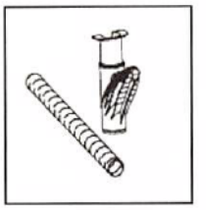
Page 179

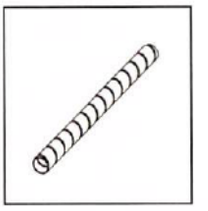
Page 180


Page 180

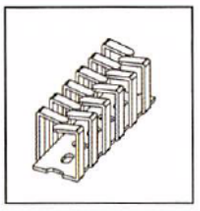
Page 181

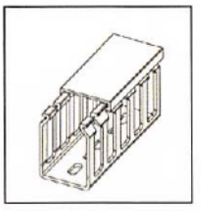
Page 181

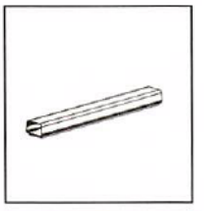
Page 182

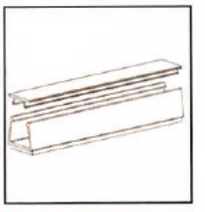
Page 182

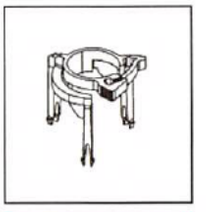
Page 183

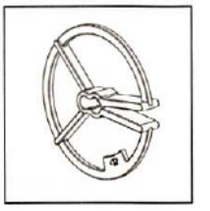
Page 183

-800-621-1892
Get quote
Angic Global Solutions 1-888-872-0690
https://www.AngicGlobal.com Sales@AngicGlobal.com

Fiber Management


Page 186

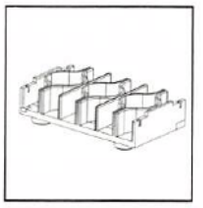
Page 187


Page 187

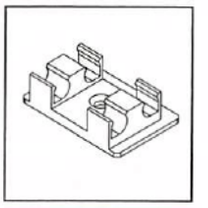
Pages 188-191

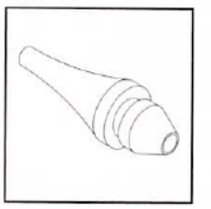
Page 193

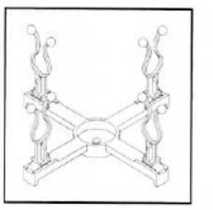
Pages 194-195

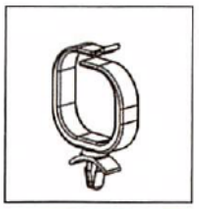
Page 195

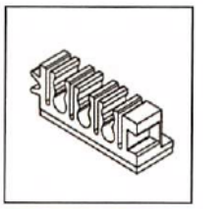
Page 196

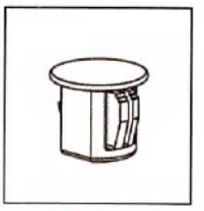
Page 201

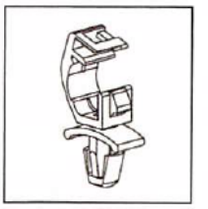
Page 204

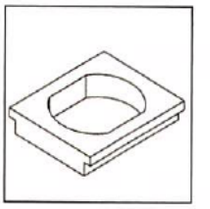
Page 202

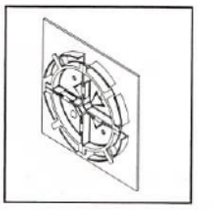
Pages 208-212

Grommets & Bushings

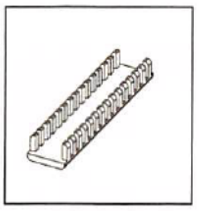
Page 216

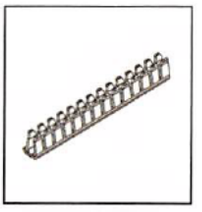
Page 217

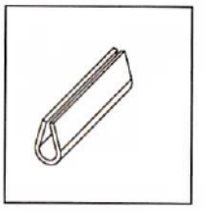
Page 218

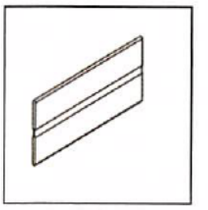
Page 218

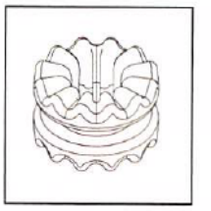
Page 219

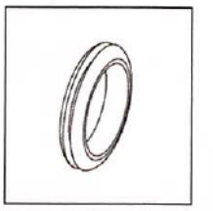
Pages 219-220


Page 224

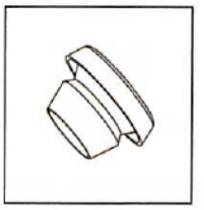
Pages 222-224

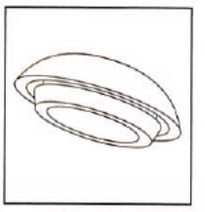
Page 224

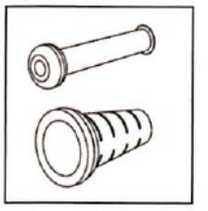
Page 222

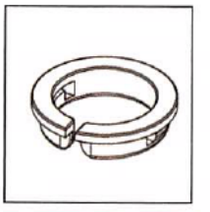
Page 221

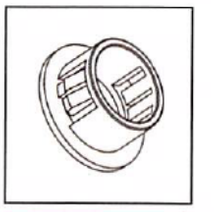
Page 223


Page 223

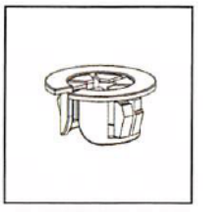
Page 223

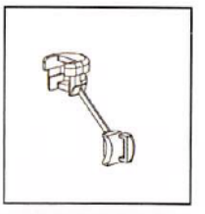
Page 225

39-4060 Samp
Get quote
Angic Global Solutions 1-888-872-0690
https://www.AngicGlobal.com Sales@AngicGlobal.com

General Information

GENERAL INFORMATION

- Richco Mfr. UL No. E61981 (N)
- Federal Cage (Mil) No. 06915 with Control No. Designation B1041
- Yellow Card #E71558 (N)

Remember... if you don't see what you need, call us!

Send us a design or sketch your design and we'll take it from there.

NYLON COLOR

All parts which are manufactured in Nylon 6/6 (RMS-01) or Flame Retardant Nylon 6/6 (RMS-19) are natural in color unless otherwise specified. Nylon 6/6 (RMS-01) can be supplied in most any color for an additional charge. Please contact Richco Customer Service for pricing. To dye the products, delivery takes approximately 2 to 4 weeks providing that the natural Nylon part is in stock. Dyed parts cannot be color matched. Color matched parts will require a minimum order quantity (MOQ) and additional lead time.

Nylon Storage Guidelines / Shelf Life

All Richco Nylon parts are packaged in sealed plastic bags and contain an appropriate level of moisture. When stored in the original unopened bags at 73°F (23°C) and 50% RH, parts shelf life is one year from date of shipment.

SPECIFICATIONS

Specifications in this catalog are for reference only. Richco reserves the right to make changes in the specifications of its proprietary products at any time without notice. Contact Richco for our latest technical drawings.

RELEASE TAB

"Typical Release Tab Location", when noted anywhere in this catalog, refers to an adhesive liner release tab that could exist on any side of a Richco part unless otherwise noted.

TOLERANCES

Unless Otherwise Noted

	Extruded	Molded	Metal
.x	—	± — (0.40)	—
.xx	± .020 (0.51)	± .01 (0.25)	± .015 (0.38)
.xxx	± .015 (0.38)	—	± .005 (0.13)
Fractions	± 1/32 (0.79)	± 1/64 (0.40)	± 1/64 (0.40)

All dimensions shown in this catalog are in inches (metric) unless otherwise noted.

Notes:

- **Up-to-the minute product updates can be seen on our corporate web page at www.richco-inc.com**
- **Raw Material Specifications (RMS) can be found at the end of the catalog – pages 227-234**
- **Want to try a sample? Please call 1-800-621-1892**

-800-621-1892 Angic Global Solutions 1-888-872-0690
https://www.AngicGlobal.com Sales@AngicGlobal.com
ANGIC Get quote

General Features

Richco offers a range of products for printed circuit boards (PCBs), which aid the support, spacing, locking and guiding of the board within electronic applications. The majority of supports are designed to be installed manually by hand and do not require automated assembly equipment. Richco's circuit board hardware products are available in a wide array of materials. Richco provides the largest selection of PCB hardware products in the electronics industry.

Typical Applications

- Automotive – GPS, CD and radio equipment
- Brown Goods – Audio and video equipment, consumer electronics
- Security Systems – CCTV, X-ray, alarms and scanning equipment
- Office equipment – Computers, computer peripherals and photocopiers
- White Goods – Microwaves, washing machines, ovens
- Telecommunications equipment – Transponder/receiver cards, signal amplifier modules.

Terminology

Snap-Lock

A snap-in mount that is pushed through the hole in the panel or chassis, which closes and snaps open on the opposite side to give a mechanical and secure lock. To remove, simply squeeze the locking device of the spacer/support.

Snap-Fit

A snap-in mount that is pushed through a hole in a panel or chassis and deflects on the opposite side to produce a mechanical pressure hold. To remove simply pull or push, no squeezing of the device is required.

Custom Options

Special Order

Parts that are identified as "special order" will require a minimum order quantity (MOQ) as well as possible tooling charges.

Locking Devices and Spacer Heights

If you do not find a spacer/support with the locking device or spacer length that meets your requirements, please contact your local Richco office. We have the ability to interchange locking devices and create custom spacer lengths on most of our circuit board spacers and supports. In some instances new tooling and an MOQ may apply.

Materials

The most common materials used for Richco's circuit board hardware are:

Material	UL94 Flammability Rating	RoHS Compliance	RMS
Nylon 6/6	V2	Yes	01
Nylon 6/6	V0	Yes	19

For more details on material properties please consult the materials data section (RMS) of the catalog. Should you require a part to be manufactured in a different material which is not shown in the catalog, please contact your local Richco office to discuss your requirements.

Color

Circuit board supports manufactured in Nylon 6/6 (RMS-01) can by dyed almost any color. Delivery can take approximately 2-4 weeks provided that the natural Nylon part is in stock. Please note dyed parts cannot be color matched. However, we can color match if we are provided with a Pantone or RAL color code reference. Please contact your local Richco office for further details.

Stress Relieved Parts

For use of products in extremely hot and dry conditions, most circuit board supports manufactured in Nylon 6/6 (RMS-01) can be "stress relieved" to retard moisture evaporation from the part. To order, add -SR after the part number. Please consult your local Richco office for a quotation. Stress relieved parts are manufactured in the U.S. only.

Introduction

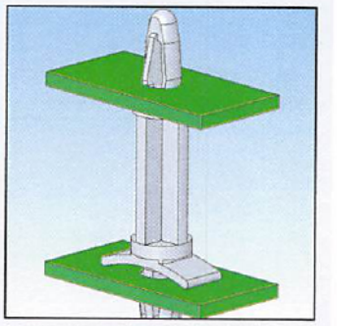

Locking Circuit Board Supports

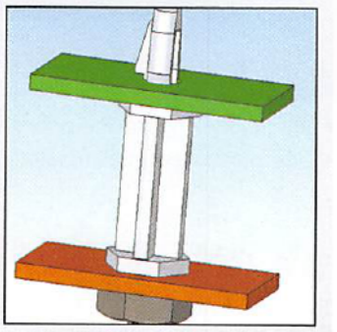

Studded Circuit Board Supports

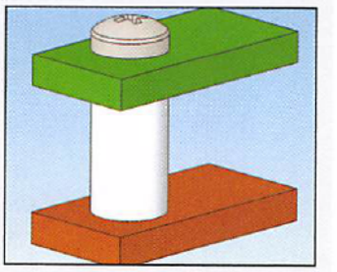

Nylon Spacers

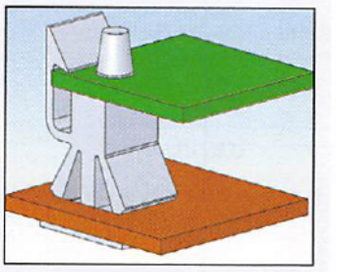

Reverse Locking Edge Holding Circuit Board Supports

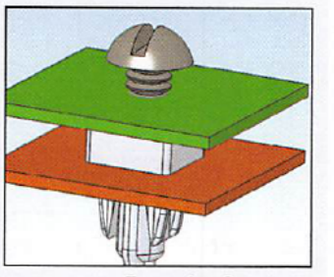

Expansion Grommets

39-4060 Samp

Get quote

Angic Global Solutions 1-888-872-0690
https://www.AngicGlobal.com Sales@AngicGlobal.com

A

LCBS
Locking Circuit Board Support

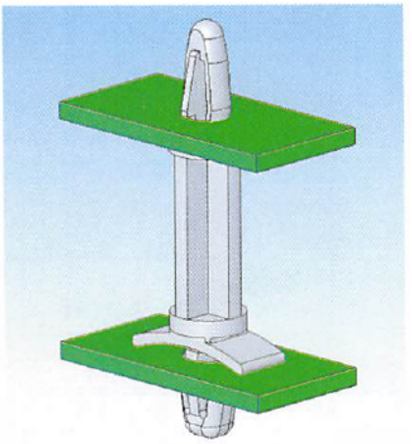

LCBS

Top Hole: Snap-lock: .156 ± .003 (4 ± 0.08)
Panel Thickness: .062 (1.57)

Fig. 1

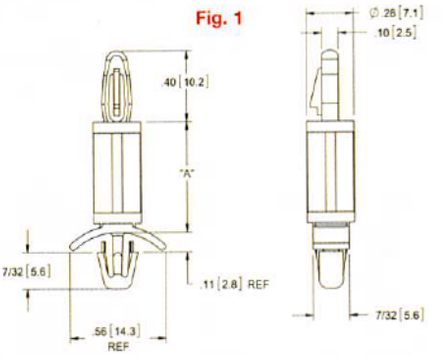

Bottom Hole: Snap-lock: .187 ± .003 (4.75 ± 0.08)
Panel Thickness: .031 - .078 (0.79 - 1.98)

LCBS-2

Top Hole: Snap-lock: .156 ± .003 (4 ± 0.08)
Panel Thickness: .062 (1.57)

Fig. 2

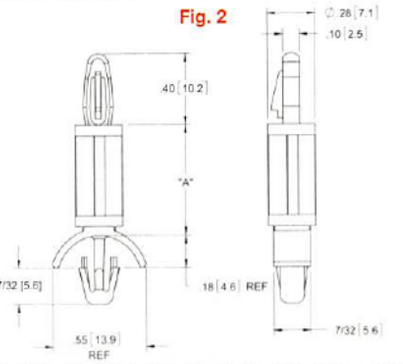

Bottom Hole: Snap-lock: .187 ± .003 (4.75 ± 0.08)
Panel Thickness: .078 - .140 (1.98 - 3.56)

Features

- Unique locking device provides a mechanically secure connection
- One-piece design eliminates the need for screws, nuts and washers

LCBS-3

Top Hole: Snap-lock: .156 ± .003 (4 ± 0.08)
Panel Thickness: .093 (2.36)

Fig. 3

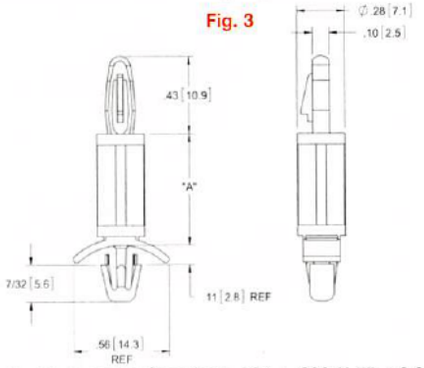

Bottom Hole: Snap-lock: .187 ± .003 (4.75 ± 0.08)
Panel Thickness: .031 - .078 (0.79 - 1.98)

LCBS-5

Top Hole: Snap-lock: .156 ± .003 (4 ± 0.08)
Panel Thickness: .062 (1.57)

Fig. 4

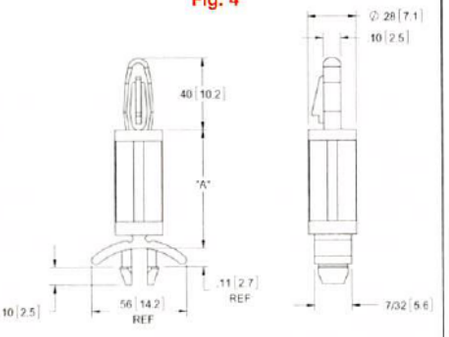

Bottom Hole: Snap-lock: .187 ± .003 (4.75 ± 0.08)
Panel Thickness: .031 - .078 (0.79 - 1.98)

LCBS-6

Top Hole: Snap-lock: .156 ± .003 (4 ± 0.08)
Panel Thickness: .093 (2.36)

Fig. 5

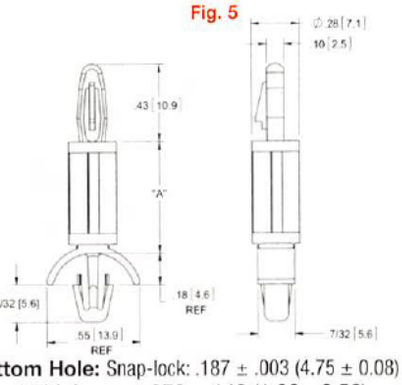

Bottom Hole: Snap-lock: .187 ± .003 (4.75 ± 0.08)
Panel Thickness: .078 - .140 (1.98 - 3.56)

LCBS (Fig. 1)		LCBS-2 (Fig. 2)		LCBS-3 (Fig. 3)	LCBS-5 (Fig. 4)	LCBS-6 (Fig. 5)	Standard Pack: 1,000 per bag
Mat'l: Nylon 6/6, RMS-01 Color: Natural	Mat'l: Nylon 6/6, RMS-19 Color: Natural	Mat'l: Nylon 6/6, RMS-01 Color: Natural	Mat'l: Nylon 6/6, RMS-19 Color: Natural	Mat'l: Nylon 6/6, RMS-01* Color: Natural	Mat'l: Nylon 6/6, RMS-01* Color: Natural	Mat'l: Nylon 6/6, RMS-01* Color: Natural	"A" Standoff Height ± .015 (0.4)
LCBS-3-01	LCBS-3-19	LCBS-2-3-01	LCBS-2-3-19	LCBS-3-3-01	LCBS-5-3-01	LCBS-6-3-01	3/16 (4.8)
LCBS-4-01	LCBS-4-19	LCBS-2-4-01	LCBS-2-4-19	LCBS-3-4-01	LCBS-5-4-01	LCBS-6-4-01	1/4 (6.4)
LCBS-5-01	LCBS-5-19	LCBS-2-5-01	LCBS-2-5-19	LCBS-3-5-01	LCBS-5-5-01	LCBS-6-5-01	5/16 (7.9)
LCBS-6-01	LCBS-6-19	LCBS-2-6-01	LCBS-2-6-19	LCBS-3-6-01	LCBS-5-6-01	LCBS-6-6-01	3/8 (9.5)
LCBS-7-01	LCBS-7-19	LCBS-2-7-01	LCBS-2-7-19	LCBS-3-7-01	LCBS-5-7-01	LCBS-6-7-01	7/16 (11.1)
LCBS-8-01	LCBS-8-19	LCBS-2-8-01	LCBS-2-8-19	LCBS-3-8-01	LCBS-5-8-01	LCBS-6-8-01	1/2 (12.7)
LCBS-10-01	LCBS-10-19	LCBS-2-10-01	LCBS-2-10-19	LCBS-3-10-01	LCBS-5-10-01	LCBS-6-10-01	5/8 (15.9)
LCBS-12-01	LCBS-12-19	LCBS-2-12-01	LCBS-2-12-19	LCBS-3-12-01	LCBS-5-12-01	LCBS-6-12-01	3/4 (19.1)
LCBS-14-01	LCBS-14-19	LCBS-2-14-01	LCBS-2-14-19	LCBS-3-14-01	LCBS-5-14-01	LCBS-6-14-01	7/8 (22.2)
LCBS-16-01	LCBS-16-19	LCBS-2-16-01	LCBS-2-16-19	LCBS-3-16-01	LCBS-5-16-01	LCBS-6-16-01	1 (25.4)
LCBS-18-01	LCBS-18-19	LCBS-2-18-01	LCBS-2-18-19	LCBS-3-18-01	LCBS-5-18-01	LCBS-6-18-01	1-1/8 (28.6)
LCBS-20-01	LCBS-20-19	LCBS-2-20-01	LCBS-2-20-19	LCBS-3-20-01	LCBS-5-20-01	LCBS-6-20-01	1-1/4 (31.7)
LCBS-22-01	LCBS-22-19	LCBS-2-22-01	LCBS-2-22-19	LCBS-3-22-01	LCBS-5-22-01	LCBS-6-22-01	1-3/8 (34.9)
*Available in UL94 V0 material by special order only. To order, replace -01 with -19.							
Available by special order; 5,000 piece minimum.							

Metric Lengths	
LCBS (Fig. 1)	Standard Pack: 1,000 per bag
Mat'l: Nylon 6/6, RMS-01* Color: Blue	"A" Standoff Height ± 0.4
LCBS-6M-01	6
LCBS-8M-01	8
LCBS-10M-01	10
LCBS-12M-01	12
LCBS-14M-01	14
LCBS-16M-01	16
*Available in UL94 V0 material. To order, replace -01 with -19.	
Available by special order; 5,000 piece minimum.	

-800-621-1892
ANGIC
Get quote
Angic Global Solutions 1-888-872-0690
https://www.AngicGlobal.com Sales@AngicGlobal.com

A

LCBS-HT
High Temperature Circuit Board Support

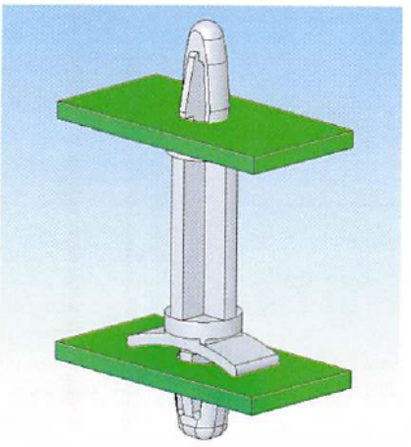

Material Operating Temperature
-40-392°F (-40-200°C)

Top Hole: Snap-lock: .156 ± .003 (4 ± 0.08)
Panel Thickness: .062 (1.57)

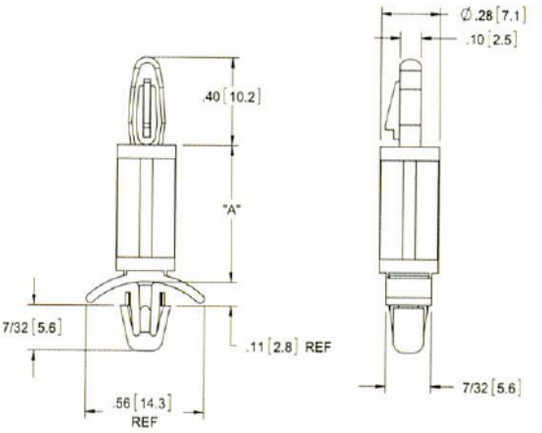

Bottom Hole: Snap-lock: .187 ± .003 (4.75 ± 0.08)
Panel Thickness: .031 - .078 (0.79 - 1.98)

LCBS-HT	Standard Pack: 1,000 per bag
Mat'l: PEI, RMS-162 Color: Black	"A" Standoff Height ± .015 (0.4)
LCBS-3-HT	3/16 (4.8)
LCBS-4-HT	1/4 (6.4)
LCBS-5-HT	5/16 (7.9)
LCBS-6-HT	3/8 (9.5)
LCBS-7-HT	7/16 (11.1)
LCBS-8-HT	1/2 (12.7)
LCBS-10-HT	5/8 (15.9)
LCBS-12-HT	3/4 (19.1)
LCBS-14-HT	7/8 (22.2)
LCBS-16-HT	1 (25.4)
LCBS-18-HT	1-1/8 (28.6)
LCBS-20-HT	1-1/4 (31.7)
LCBS-22-HT	1-3/8 (34.9)

LCBS-4

Top Hole: Snap-fit: .156 ± .003 (4 ± 0.08)
Panel Thickness: .062 (1.57)

Fig. 1

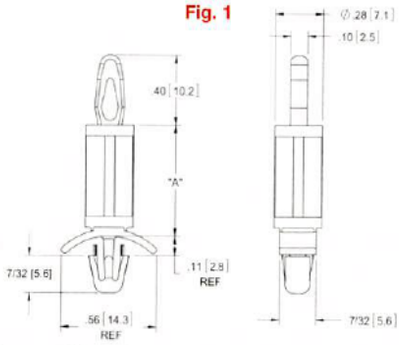

Bottom Hole: Snap-lock: .187 ± .003 (4.75 ± 0.08)
Panel Thickness: .031 - .078 (0.79 - 1.98)

LCBS-7

Top Hole: Snap-lock: .156 ± .003 (4 ± 0.08)
Panel Thickness: .062 (1.57)

Fig. 2

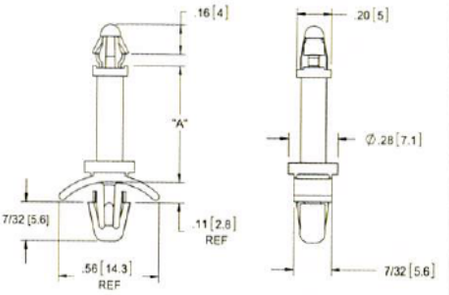

Bottom Hole: Snap-lock: .187 ± .003 (4.75 ± 0.08)
Panel Thickness: .031 - .078 (0.79 - 1.98)

LCBS-8

Top Hole: Snap-lock: .156 ± .003 (4 ± 0.08)
Panel Thickness: .062 (1.57)

Fig. 3

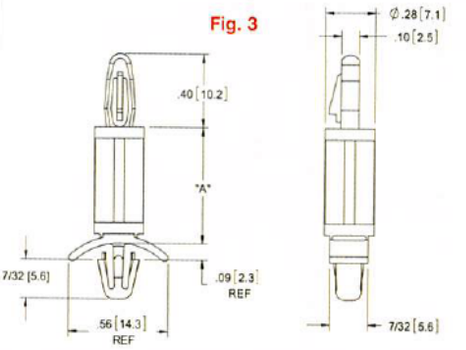

Bottom Hole: Snap-lock: .187 ± .003 (4.75 ± 0.08)
Panel Thickness: .008 - .055 (0.2 - 1.4)

LCBS-4 (Fig. 1)	LCBS-7 (Fig. 2)	LCBS-8 (Fig. 3)	Standard Pack: 1,000 per bag
Mat'l: Nylon 6/6, RMS-01* Color: Natural	Mat'l: Nylon 6/6, RMS-01* Color: Natural	Mat'l: Nylon 6/6, RMS-01* Color: Natural	"A" Standoff Height ± .015 (0.4)
LCBS-4-3-01	LCBS-7-3-01	LCBS-8-3-01	3/16 (4.8)
LCBS-4-4-01	LCBS-7-4-01	LCBS-8-4-01	1/4 (6.4)
LCBS-4-5-01	LCBS-7-5-01	LCBS-8-5-01	5/16 (7.9)
LCBS-4-6-01	LCBS-7-6-01	LCBS-8-6-01	3/8 (9.5)
LCBS-4-7-01	LCBS-7-7-01	LCBS-8-7-01	7/16 (11.1)
LCBS-4-8-01	LCBS-7-8-01	LCBS-8-8-01	1/2 (12.7)
LCBS-4-10-01	LCBS-7-10-01	LCBS-8-10-01	5/8 (15.9)
LCBS-4-12-01	LCBS-7-12-01	LCBS-8-12-01	3/4 (19.1)
LCBS-4-14-01	LCBS-7-14-01	LCBS-8-14-01	7/8 (22.2)
LCBS-4-16-01	LCBS-7-16-01	LCBS-8-16-01	1 (25.4)
LCBS-4-18-01	LCBS-7-18-01	LCBS-8-18-01	1-1/8 (28.6)
LCBS-4-20-01	LCBS-7-20-01	LCBS-8-20-01	1-1/4 (31.7)
LCBS-4-22-01	LCBS-7-22-01	LCBS-8-22-01	1-3/8 (34.9)
*Available in UL94 V0 material by special order. To order, replace -01 with -19.			
Available by special order only; 5,000 piece minimum.			

39-4060 Samp
Get quote
Angic Global Solutions 1-888-872-0690
https://www.AngicGlobal.com Sales@AngicGlobal.com

A

LCBST

Top Hole: Snap-lock: .125 ± .002 (3.18 ± 0.05)
Panel Thickness: .062 (1.57)

Fig. 1

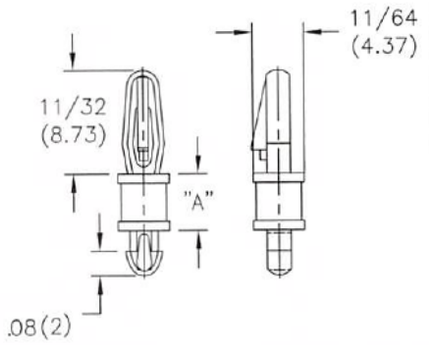

Bottom Hole: Snap-lock: .100 ± .002 (2.54 ± 0.05)
Panel Thickness: .064 (1.63) Max.

CLCBST

Top Hole: Snap-lock: .125 ± .002 (3.18 ± 0.05)
Panel Thickness: .062 (1.57)

Fig. 2

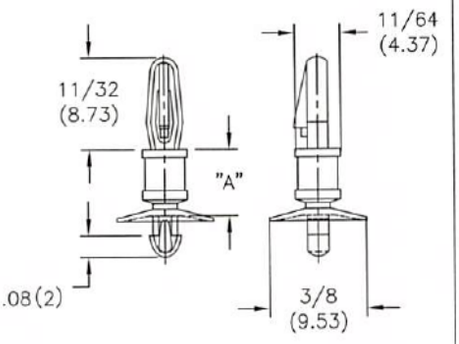

Bottom Hole: Snap-lock: .100 ± .002 (2.54 ± 0.05)
Panel Thickness: .062 (1.57)

LCBSM

Top Hole: Snap-lock: .125 ± .002 (3.18 ± 0.05)
Panel Thickness: .062 (1.57)

Fig. 3

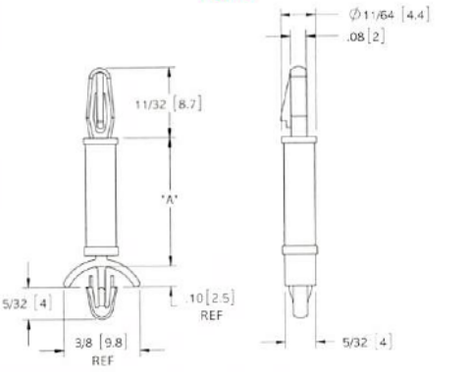

Bottom Hole: Snap-lock: .125 ± .002 (3.18 ± 0.05)
Panel Thickness: .031 - .078 (0.79 - 1.98)

CBS
Circuit Board Support

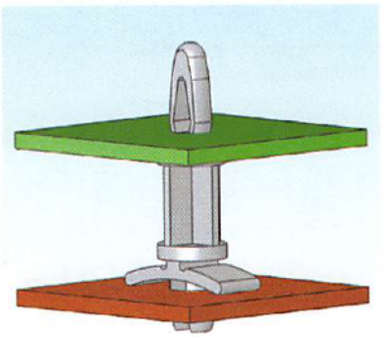

CBS

Top Hole: Snap-fit: .156 ± .003 (4 ± 0.08)
Panel Thickness: .062 (1.57)

Fig. 4

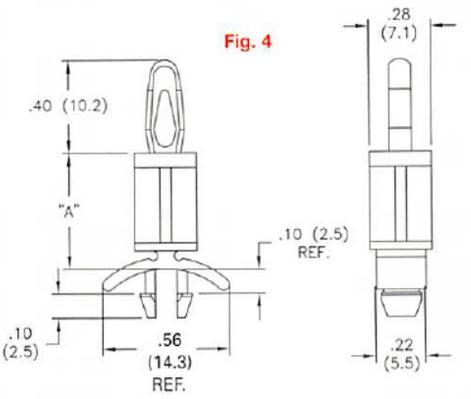

Bottom Hole: Snap-lock: .187 ± .003 (4.75 ± 0.08)
Panel Thickness: .031 - .078 (0.79 - 1.98)

LNCBS

Top Hole: Snap-fit: .156 ± .003 (4 ± 0.08)
Panel Thickness: .062 (1.57)

Fig. 5

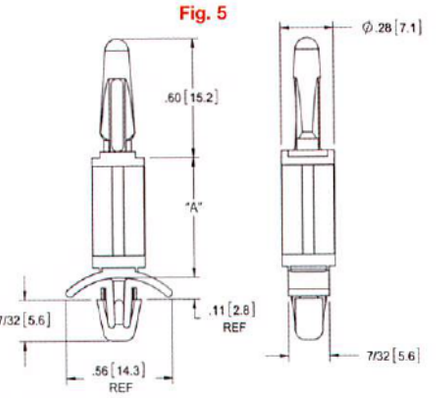

Bottom Hole: Snap-lock: .187 ± .003 (4.75 ± 0.08)
Panel Thickness: .031 - .078 (0.79 - 1.98)

Features
- Releasable to allow for repairs

LCBST (Fig. 1)	CLCBST (Fig. 2)	LCBSM (Fig. 3)	CBS (Fig. 4)		LNCBS (Fig. 5)		Standard Pack: 1,000 per bag
Mat'l: Nylon 6/6, RMS-01* Color: Natural	Mat'l: Nylon 6/6, RMS-01* Color: Natural	Mat'l: Nylon 6/6, RMS-01* Color: Natural	Mat'l: Nylon 6/6, RMS-01 Color: Natural	Mat'l: Nylon 6/6, RMS-19 Color: Natural	Mat'l: Nylon 6/6, RMS-01 Color: Natural	Mat'l: Nylon 6/6, RMS-19 Color: Natural	"A" Standoff Height ± .015 (0.4)
LCBST-2-01	CLCBST-2-01	LCBSM-2-01	Not Available	Not Available	Not Available	Not Available	1/8 (3.2)
LCBST-3-01	CLCBST-3-01	LCBSM-3-01	CBS-3-01	CBS-3-19	LNCBS-3-01	LNCBS-3-19	3/16 (4.8)
LCBST-4-01	CLCBST-4-01	LCBSM-4-01	CBS-4-01	CBS-4-19	LNCBS-4-01	LNCBS-4-19	1/4 (6.4)
LCBST-5-01	CLCBST-5-01	LCBSM-5-01	Not Available	Not Available	Not Available	Not Available	5/16 (7.9)
LCBST-6-01	CLCBST-6-01	LCBSM-6-01	CBS-6-01	CBS-6-19	LNCBS-6-01	LNCBS-6-19	3/8 (9.5)
LCBST-7-01	CLCBST-7-01	LCBSM-7-01	Not Available	Not Available	Not Available	Not Available	7/16 (11.1)
LCBST-8-01	CLCBST-8-01	LCBSM-8-01	CBS-8-01	CBS-8-19	LNCBS-8-01	LNCBS-8-19	1/2 (12.7)
LCBST-9-01	CLCBST-9-01	LCBSM-9-01	Not Available	Not Available	Not Available	Not Available	9/16 (14.3)
LCBST-10-01	CLCBST-10-01	LCBSM-10-01	CBS-10-01	CBS-10-19	LNCBS-10-01	LNCBS-10-19	5/8 (15.9)
-	-	-	CBS-12-01	CBS-12-19	LNCBS-12-01	LNCBS-12-19	3/4 (19.1)
-	-	-	CBS-14-01	CBS-14-19	LNCBS-14-01	LNCBS-14-19	7/8 (22.2)
*Available in UL94 V0 material by special order. To order, replace -01 with -19.							
Available by special order only; 5,000 piece minimum.							

-800-621-1892
ANGIC
Get quote
Angic Global Solutions 1-888-872-0690
https://www.AngicGlobal.com Sales@AngicGlobal.com

BHL

Top Hole: Snap-lock: .156 ± .003 (4 ± 0.08)
Panel Thickness: .062 (1.57)

Fig. 1

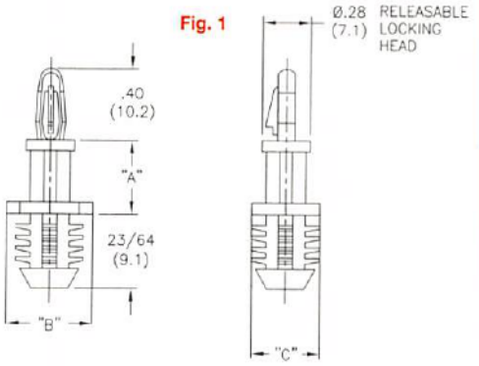

Bottom Hole: Press-fit: .312 ± .003 (7.92 ± 0.08)
Panel Thickness: 1/4 (6.4) Min.

BHL/BHC
Blind Hole Series

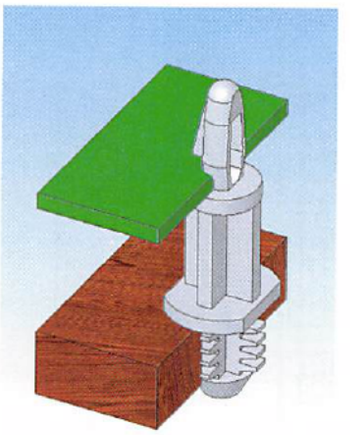

BHC

Top Hole: Snap-fit: .156 ± .003 (4 ± 0.08)
Panel Thickness: .062 (1.57)

Fig. 2

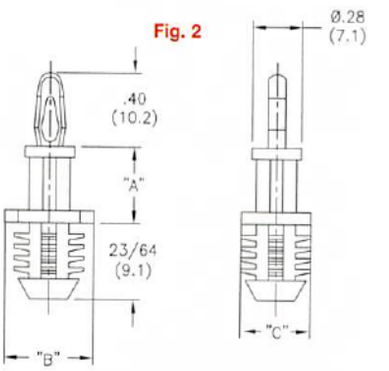

Bottom Hole: Press-fit: .312 ± .003 (7.92 ± 0.08)
Panel Thickness: 1/4 (6.4) Min.

Features

- Flexible ribs lock into round, oval, threaded, punched or drilled blind holes.
- Blunt tip allows maximum grip in blind holes with minimum protrusion in pass-through applications

BHL (Fig. 1)	BHC (Fig. 2)	Standard Pack: 1,000 per bag		
Mat'l: Nylon 6/6, RMS-01* Color: Natural	Mat'l: Nylon 6/6, RMS-01* Color: Natural	"A" Standoff Height ± .015 (0.4)	"B" ± .015 (0.4)	"C" ± .015 (0.4)
BHL-3-01	BHC-3-01	3/16 (4.8)	7/16 (11.1)	5/16 (7.9)
BHL-4-01	BHC-4-01	1/4 (6.4)		
BHL-6-01	BHC-6-01	3/8 (9.5)		
BHL-7-01	Not Available	7/16 (11.1)		
BHL-8-01	BHC-8-01	1/2 (12.7)		
BHL-10-01	BHC-10-01	5/8 (15.9)		
BHL-12-01	BHC-12-01	3/4 (19.1)		
BHL-14-01	BHC-14-01	7/8 (22.2)		
*Available in UL94 V0 material by special order. To order, replace -01 with -19.				
Press-fit for .250(6.35) hole available by special order.				

SRLCBS
Snap Rivet Locking Circuit Board Support

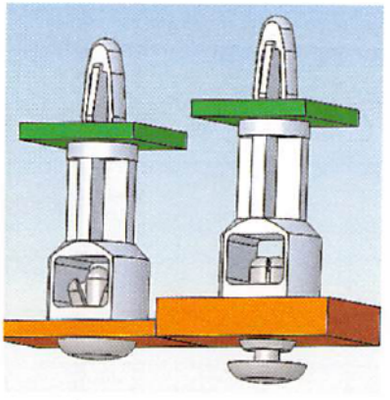

Top Hole: Snap-lock: .156 ± .003 (4 ± 0.08)
Panel Thickness: .062 (1.57)

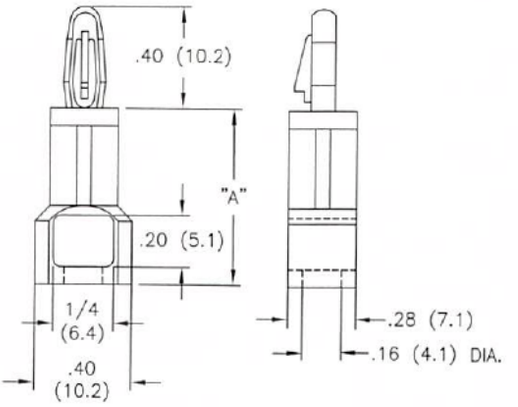

Bottom Hole: Snap Rivet: .161 - .165 (4.1 - 4.2)
Panel Thickness: See Rivet Table

Mat'l: Nylon 6/6, RMS-01* Color: Natural	Standard Pack: 1,000 per bag
	"A" Standoff Height ± .015 (0.4)
SRLCBS-6-01	3/8 (9.5)
SRLCBS-7-01	7/16 (11.1)
SRLCBS-8-01	1/2 (12.7)
SRLCBS-10-01	5/8 (15.9)
SRLCBS-12-01	3/4 (19.1)
SRLCBS-14-01	7/8 (22.2)
SRLCBS-16-01	1 (25.4)
*Available in UL94 V0 material by special order. To order, replace -01 with -19.	

Use Richco Rivet Part No.	For Chassis Thickness
SR-4050	.026-.062 (0.7-1.6)
SR-4060	.062-.105 (1.5-2.7)
SR-4070	.105-.145 (2.7-3.7)
SR-4080	.145-.184 (3.7-4.7)
SR-4090	.184-.223 (4.7-5.7)
SR-4100	.223-.263 (5.7-6.7)
SR-4120	.282-.341 (7.2-8.7)
See Page Number 52	
Rivets also available in UL94 V0 material.	

Features

- Proper selection of rivet (sold separately) will accommodate a wide range of panel thicknesses
- Attractive button head on rivet provides minimal protrusion on chassis underside

ANGIC Get quote
Angic Global Solutions 1-888-872-0690
https://www.AngicGlobal.com Sales@AngicGlobal.com

A

DLCBS

Dual Locking Circuit Board Support

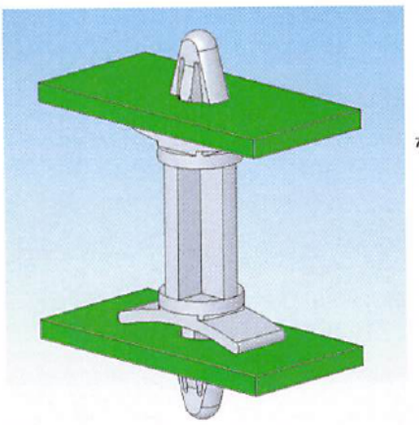

DLCBS

Top Hole: Snap-lock: .156 ± .003 (4 ± 0.08)
Panel Thickness: .031 - .078 (0.79 - 1.98)

Fig. 1

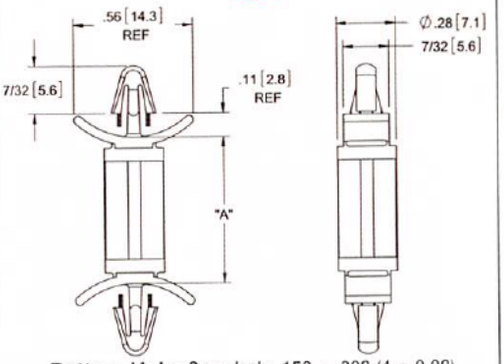

Bottom Hole: Snap-lock: .156 ± .003 (4 ± 0.08)
Panel Thickness: .031 - .078 (0.79 - 1.98)

DLCBS2

Top Hole: Snap-lock: .187 ± .003 (4.75 ± 0.08)
Panel Thickness: .031 - .078 (0.79 - 1.98)

Fig. 2

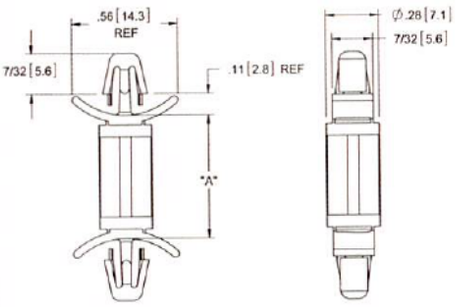

Bottom Hole: Snap-lock: .187 ± .003 (4.75 ± 0.08)
Panel Thickness: .031 - .078 (0.79 - 1.98)

Features

- One-piece design eliminates the need for screws, nuts and washers
- The tension wings on both ends of the support provide a tight fit

DLCBS3

Top Hole: Snap-lock: .156 ± .003 (4 ± 0.08)
Panel Thickness: .031 - .078 (0.79 - 1.98)

Fig. 3

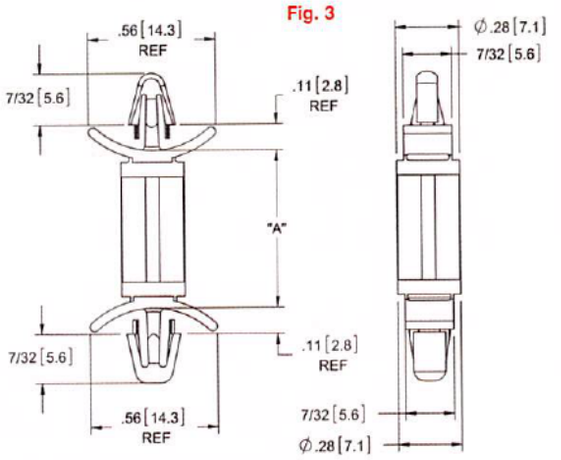

Bottom Hole: Snap-lock: .187 ± .003 (4.75 ± 0.08)
Panel Thickness: .031 - .078 (0.79 - 1.98)

DLCBSM

Top Hole: Snap-lock: .125 ± .002 (3.18 ± 0.05)
Panel Thickness: .031 - .078 (0.79 - 1.98)

Fig. 4

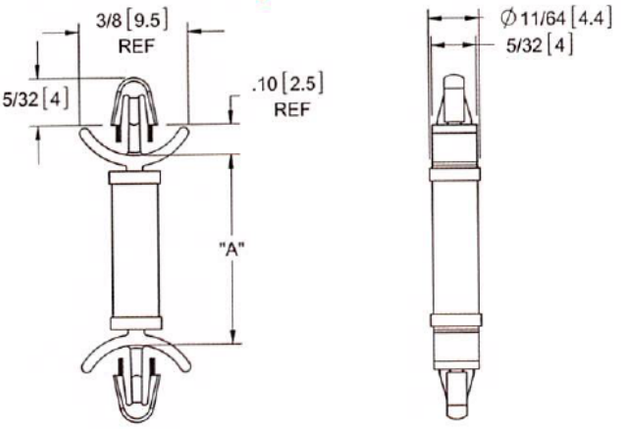

Bottom Hole: Snap-lock: .125 ± .002 (3.18 ± 0.05)
Panel Thickness: .031 - .078 (0.79 - 1.98)

DLCBS (Fig. 1)		DLCBS2 (Fig. 2)		DLCBS3 (Fig. 3)		DLCBSM (Fig. 4)	Standard Pack: 1,000 per bag
Mat'l: Nylon 6/6, RMS-01 Color: Natural	Mat'l: Nylon 6/6, RMS-19 Color: Natural	Mat'l: Nylon 6/6, RMS-01 Color: Natural	Mat'l: Nylon 6/6, RMS-19 Color: Natural	Mat'l: Nylon 6/6, RMS-01 Color: Natural	Mat'l: UL94 V0 Nylon 6/6, RMS-19 Color: Natural	Mat'l: Nylon 6/6, RMS-01 Color: Natural	"A" Standoff Height ± .015 (0.4)
DLCBS-3-01	DLCBS-3-19	DLCBS2-3-01	DLCBS2-3-19	DLCBS3-3-01	DLCBS3-3-19	DLCBSM-3-01	3/16 (4.8)
DLCBS-4-01	DLCBS-4-19	DLCBS2-4-01	DLCBS2-4-19	DLCBS3-4-01	DLCBS3-4-19	DLCBSM-4-01	1/4 (6.4)
Special Order	Special Order	Special Order	Special Order	-	-	DLCBSM-5-01	5/16 (7.9)
DLCBS-6-01	DLCBS-6-19	DLCBS2-6-01	DLCBS2-6-19	DLCBS3-6-01	DLCBS3-6-19	DLCBSM-6-01	3/8 (9.5)
Special Order	Special Order	Special Order	Special Order	-	-	DLCBSM-7-01	7/16 (11.1)
DLCBS-8-01	DLCBS-8-19	DLCBS2-8-01	DLCBS2-8-19	DLCBS3-8-01	DLCBS3-8-19	DLCBSM-8-01	1/2 (12.7)
Special Order	Special Order	Special Order	Special Order	-	-	DLCBSM-9-01	9/16 (14.3)
DLCBS-10-01	DLCBS-10-19	DLCBS2-10-01	DLCBS2-10-19	DLCBS3-10-01	DLCBS3-10-19	DLCBSM-10-01	5/8 (15.9)
DLCBS-12-01	DLCBS-12-19	DLCBS2-12-01	DLCBS2-12-19	DLCBS3-12-01	DLCBS3-12-19	Special Order	3/4 (19.1)
DLCBS-14-01	DLCBS-14-19	DLCBS2-14-01	DLCBS2-14-19	DLCBS3-14-01	DLCBS3-14-19	Special Order	7/8 (22.2)

Available in UL94 V0 material by special order. To order, replace -01 with -19.

Available by special order; 5,000 piece minimum.

-800-621-1892
Get quote
Angic Global Solutions 1-888-872-0690
https://www.AngicGlobal.com Sales@AngicGlobal.com

MDLCBS
Metal Dual Locking Circuit Board Support

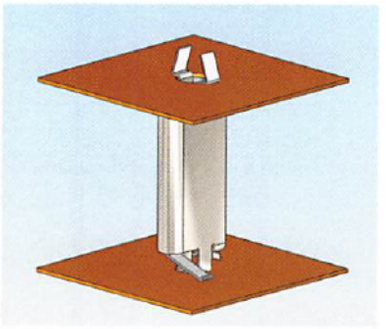

Patent D456,690

NEW

Top Hole: Snap-lock: .156 ± .003 (4 ± 0.08)
Panel Thickness: .062 (1.57)

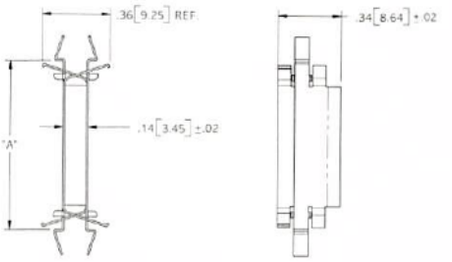

Bottom Hole: Snap-lock: .156 ± .003 (4 ± 0.08)
Panel Thickness: .062 (1.57)

Material: Stainless Steel, RMS-320	Standard Pack: 1,000 per bag
	"A" ±.015 (0.04)
MDLCBS-4	3/8 (9.5)
MDLCBS-6	1/2 (12.7)
MDLCBS-8	5/8 (15.9)
MDLCBS-12	7/8 (22.2)
MDLCBS-16	1-1/8 (28.6)

Features
- Highly conductive and impact resistant
- Metal lends superior strength and durability
- Innovative removable design

HSCBS/VD
Vibration and Shock Dampening Spacers

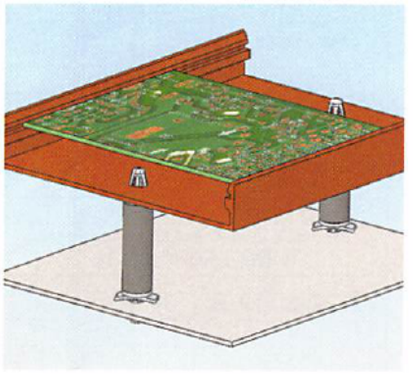

Patents Pending

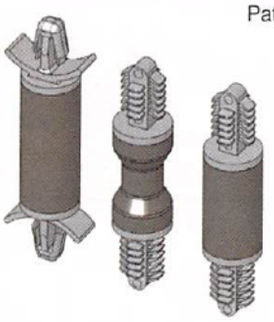

Standard Pack: 1,000 per bag			Fix Mat'l: Flame Ret. Nylon 6/6, RMS-169 Color: Natural		
Part No.	"A" ± .03 (0.8) Uncompressed	"B" Ref.	Standoff Material Color: Black	Target Load	Fig.
VD-2	.73 (18.5)	.62 (16.3)	TPE, RMS-167	1.0 lbf (4.4N)	1
VD-3	.97 (24.7)	.87 (22)			
VD-4	1.21 (30.7)	1.10 (28)			
VD-5	.49 (12.4)	.38 (9.7)		1.6 lbf (7.1N)	2
VD-6	.73 (18.5)	.62 (16.3)			
VD-7	.97 (24.7)	.87 (22)			
VD-8	1.21 (30.7)	1.10 (28)			
HSCBS-1	.59 (14.9)	.38 (9.7)	TPE, RMS-168	2.2 lbf (9.8N)	3
HSCBS-2	.83 (21)	.62 (16.3)			
HSCBS-3	1.07 (27.1)	.87 (22)			
HSCBS-4	1.31 (33.2)	1.10 (28)			

Features
- The flexible wings on the HSCBS series provide extra shock and vibration protection
- Select the appropriate "B" length for your required level of protection
- VD Series blind hole ends provide rigid mounting

Top Hole: .250 ± .003 (6.35 ± 0.08)
Panel Thickness: .07 - .31 (1.8 -7.9)

Fig. 1

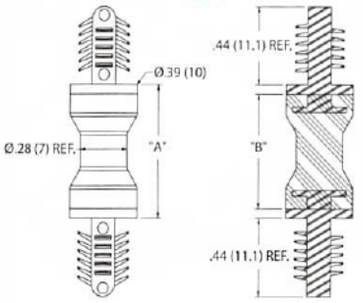

Fig. 2

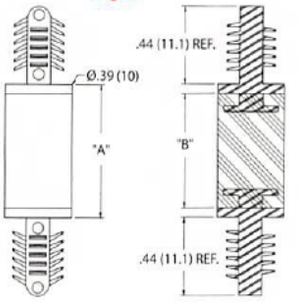

Bottom Hole: .250 ± .003 (6.35 ± 0.08)
Panel Thickness: .07-.31 (1.8 - 7.9)

Top Hole: Snap-lock: .187 ± .003 (4.75 ± 0.08)
Panel Thickness: .031 - .078 (0.79 - 1.98)

Fig. 3

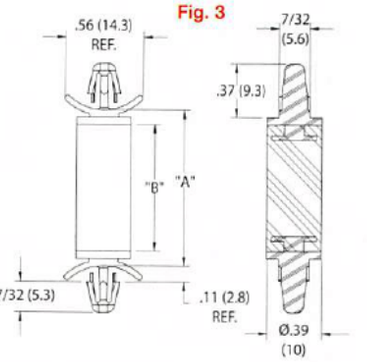

Bottom Hole: Snap-lock: .187 ± .003 (4.75 ± 0.08)
Panel Thickness: .031 - .078 (0.79 - 1.98)

ANGIC
Get quote
Angic Global Solutions 1-888-872-0690
https://www.AngicGlobal.com Sales@AngicGlobal.com

A

DLCBSRA

Releasable Dual Locking Circuit Board Support Arrowhead

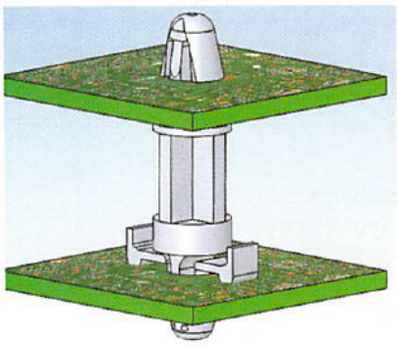

Features

- Chassis mount end has a releasable arrowhead to allow removal from top side of chassis
- Supports the European WEEE Initiative

Top Hole: Snap-lock: .187 ± .003 (4.75 ± 0.08)
Panel Thickness: .031 - .078 (0.79 - 1.98)

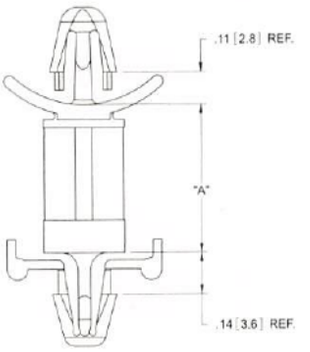

Bottom Hole: Snap-lock: .187 ± .003 (4.75 ± 0.08)
Panel Thickness: .031 - .078 (0.79 - 1.98)

DLCBSRA	Standard Pack: 1,000 per bag
Mat'l: Nylon 6/6, RMS-01* Color: Natural	"A" Standoff Height ± .015 (0.4)
DLCBSRA3-6-01	3/8 (9.5)
DLCBSRA3-8-01	1/2 (12.7)
DLCBSRA3-10-01	5/8 (15.9)
DLCBSRA3-12-01	3/4 (19.1)
DLCBSRA3-14-01	7/8 (22.2)
*Available in UL94 V0 material by special order. To order, replace -01 with -19.	

SRLAHS

Snap Rivet Locking Arrowhead Support

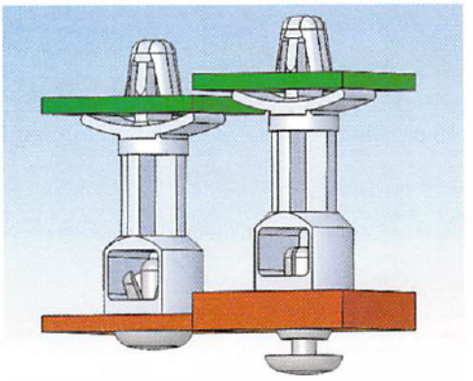

Features

- Proper selection of rivet (sold separately) will accommodate a wide range of panel thicknesses

Top Hole: Snap-lock: .187 ± .003 (4.75 ± 0.08)
Panel Thickness: .031 - .078 (0.79 - 1.98)

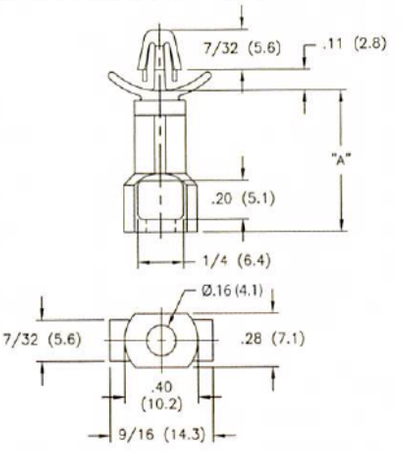

Bottom Hole: Snap Rivet: .161 - .165 (4.1 - 4.2)
Panel Thickness: See Rivet Table

Mat'l: Nylon 6/6, RMS-01* Color: Natural	Standard Pack: 1,000 per bag
	"A" Standoff Height ± .015 (0.4)
SRLAHS-7-01	7/16 (11.1)
SRLAHS-8-01	1/2 (12.7)
SRLAHS-10-01	5/8 (15.9)
SRLAHS-12-01	3/4 (19.1)
SRLAHS-14-01	7/8 (22.2)
SRLAHS-16-01	1 (25.4)
*Available in UL94 V0 material by special order. To order, replace -01 with -19.	

Use Richco Rivet Part No.	For Chassis Thickness
SR-4050	.026-.062 (0.7-1.6)
SR-4060	.062-.105 (1.5-2.7)
SR-4070	.105-.145 (2.7-3.7)
SR-4080	.145-.184 (3.7-4.7)
SR-4090	.184-.223 (4.7-5.7)
SR-4100	.223-.263 (5.7-6.7)
SR-4120	.282-.341 (7.2-8.7)
See Page Number 52	
Rivets also available in UL94 V0 material.	

BHDL

Blind Hole Dual Lock

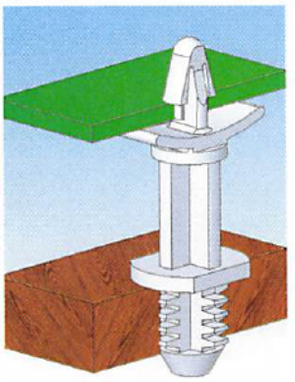

Top Hole:
Snap-lock: .156 ± .003 (4 ± 0.08)
Panel Thickness:
.031 - .078 (0.79 - 1.98)

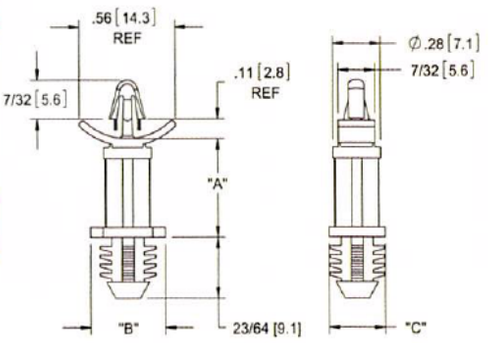

Bottom Hole:
Press-fit: .312 ± .003 (7.92 ± 0.08)
Panel Thickness: 1/4 (6.4) Min.

Mat'l: Nylon 6/6, RMS-01* Color: Natural	Standard Pack: 1,000 per bag		
	"A" Standoff Height ± .015 (0.4)	"B" ± .015 (0.4)	"C" ± .015 (0.4)
BHDL-4-01	1/4 (6.4)	7/16 (11.1)	5/16 (7.9)
BHDL-6-01	3/8 (9.5)		
BHDL-8-01	1/2 (12.7)		
BHDL-10-01	5/8 (15.9)		
BHDL-12-01	3/4 (19.1)		
BHDL-14-01	7/8 (22.2)		
*Available in UL94 V0 material by special order. To order, replace -01 with -19.			
Press-fit for .250 (6.35) hole available by special order.			

Features

- Flexible ribs lock into round, oval, threaded, punched or drilled blind holes.

-800-621-1892
Get quote
Angic Global Solutions 1-888-872-0690
https://www.AngicGlobal.com Sales@AngicGlobal.com

SP/MSPE
Support Post

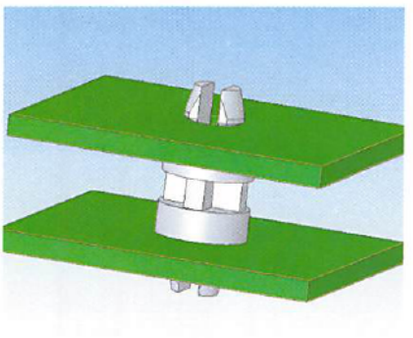

Features

- One piece design eliminates the need for screws, nuts and washers

SP1

Top Hole: Snap-lock: .156 ± .003 (4 ± 0.08)
Panel Thickness: .062 (1.57)

Fig. 1

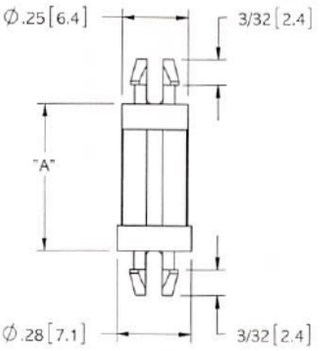

Bottom Hole: Snap-lock: .156 ± .003 (4 ± 0.08)
Panel Thickness: .062 (1.57)

SP2

Top Hole: Snap-lock: .187 ± .003 (4.75 ± 0.08)
Panel Thickness: .062 (1.57)

Fig. 2

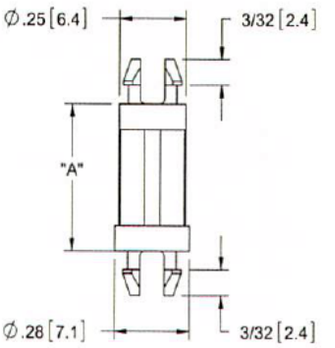

Bottom Hole: Snap-lock: .187 ± .003 (4.75 ± 0.08)
Panel Thickness: .062 (1.57)

SP3

Top Hole: Snap-lock: .156 ± .003 (4 ± 0.08)
Panel Thickness: .062 (1.57)

Fig. 3

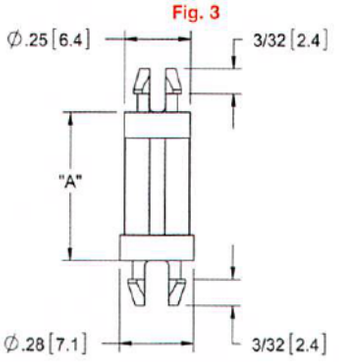

Bottom Hole: Snap-lock: .187 ± .003 (4.75 ± 0.08)
Panel Thickness: .062 (1.57)

MSPE

NEW

Top Hole: Snap-fit: .152 ± .002 (3.9 ± 0.05)
Panel Thickness: .062 (1.57)

Fig. 4

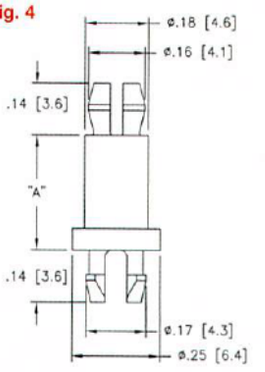

Bottom Hole: Snap-lock: .152 ± .002 (3.9 ± 0.05)
Panel Thickness: .062 (1.57)

SP1 (Fig. 1)	SP2 (Fig. 2)	SP3 (Fig. 3)	MSPE (Fig. 4)		Standard Pack: 1,000 per bag
Mat'l: Nylon 6/6, RMS-01* Color: Natural	Mat'l: Nylon 6/6, RMS-01* Color: Natural	Mat'l: Nylon 6/6, RMS-01* Color: Natural	Mat'l: Nylon 6/6, RMS-01 Color: Natural	Mat'l: Nylon 6/6, RMS-19 Color: Natural	"A" Standoff Height ± .015 (0.4)
Not Available	Not Available	Not Available	MSPE-2-01	MSPE-2-19	1/8 (3.2)
SP1-3-01	SP2-3-01	SP3-3-01	MSPE-3-01	MSPE-3-19	3/16 (4.8)
SP1-4-01	SP2-4-01	SP3-4-01	MSPE-4-01	MSPE-4-19	1/4 (6.4)
Special Order	Special Order	Special Order	MSPE-5-01	MSPE-5-19	5/16 (7.9)
SP1-6-01	SP2-6-01	SP3-6-01	MSPE-6-01	MSPE-6-19	3/8 (9.5)
Special Order	Special Order	Special Order	MSPE-7-01	MSPE-7-19	7/16 (11.1)
SP1-8-01	SP2-8-01	SP3-8-01	MSPE-8-01	MSPE-8-19	1/2 (12.7)
SP1-10-01	SP2-10-01	SP3-10-01	MSPE-10-01	MSPE-10-19	5/8 (15.9)
Special Order	Special Order	Special Order	MSPE-11-01	MSPE-11-19	11/16 (17.5)
SP1-12-01	SP2-12-01	SP3-12-01	MSPE-12-01	MSPE-12-19	3/4 (19.1)
SP1-14-01	SP2-14-01	SP3-14-01	MSPE-14-01	MSPE-14-19	7/8 (22.2)
SP1-16-01	SP2-16-01	SP3-16-01	Special Order	Special Order	1 (25.4)

*Available in UL94 V0 material by special order. To order, replace -01 with -19.

539-4060 Sam
ANGIC
Get quote
Angic Global Solutions 1-888-872-0690
https://www.AngicGlobal.com Sales@AngicGlobal.com

A

MSP
Mini Support Post

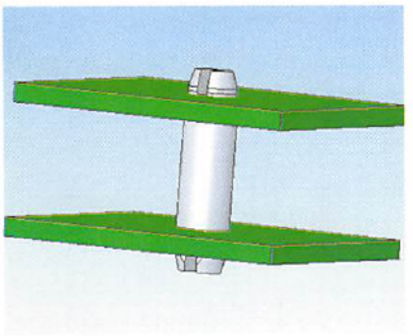

Features

- PCB Mount is snap-fit, chassis mount is snap-lock
- Board mount end is releasable

MSP

Top Hole: Snap-fit: .152 ± .002 (3.86 ± 0.05)
Panel Thickness: .062 (1.57)

Fig. 1

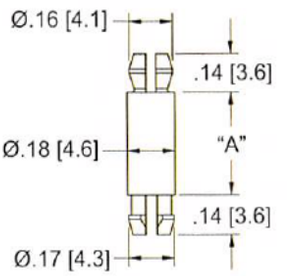

Bottom Hole: Snap-lock: .152 ± .002 (3.86 ± 0.05)
Panel Thickness: .062 (1.57)

MSPM

Top Hole: Snap-fit: .125 ± .002 (3.18 ± 0.05)
Panel Thickness: .062 (1.57)

Fig. 2

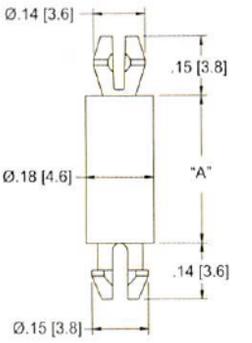

Bottom Hole: Snap-lock: .125 ± .002 (3.18 ± 0.05)
Panel Thickness: .062 (1.57)

DLMSP

Top Hole: Snap-lock: .152 ± .002 (3.86 ± 0.05)
Panel Thickness: .062 (1.57)

Fig. 3

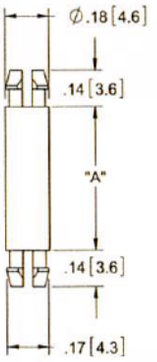

Bottom Hole: Snap-lock: .152 ± .002 (3.86 ± 0.05)
Panel Thickness: .062 (1.57)

DLMSPM

Top Hole: Snap-lock: .125 ± .002 (3.18 ± 0.05)
Panel Thickness: .062 (1.57)

Fig. 4

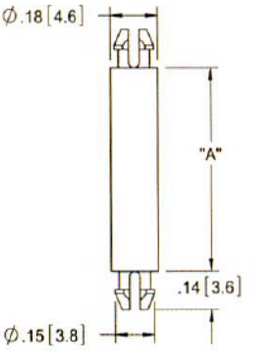

Bottom Hole: Snap-lock: .125 ± .002 (3.18 ± 0.05)
Panel Thickness: .062 (1.57)

DLCBST

Top Hole: Snap-lock: .100 ± .002 (2.54 ± 0.05)
Panel Thickness: .064 (1.63) Max.

Fig. 5

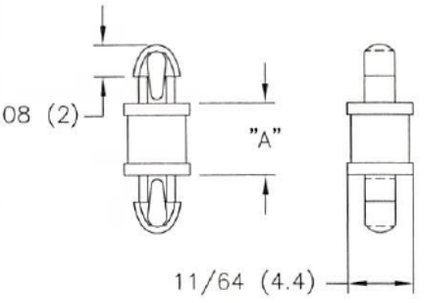

Bottom Hole: Snap-lock: .100 ± .002 (2.54 ± 0.05)
Panel Thickness: .064 (1.63) Max.

MSP (Fig. 1)		MSPM (Fig. 2)		DLMSP (Fig. 3)	DLMSPM (Fig. 4)	DLCBST (Fig. 5)	Standard Pack: 1,000 per bag
Mat'l: Nylon 6/6, RMS-01 Color: Natural	Mat'l: Nylon 6/6, RMS-19 Color: Natural	Mat'l: Nylon 6/6, RMS-01 Color: Natural	Mat'l: Nylon 6/6, RMS-19 Color: Natural	Mat'l: Nylon 6/6, RMS-01* Color: Natural	Mat'l: Nylon 6/6, RMS-01* Color: Natural	Mat'l: Nylon 6/6, RMS-01* Color: Natural	"A" Standoff Height ± .015 (0.4)
Not Available	Not Available	Not Available	Not Available	Not Available	Not Available	DLCBST-1-01	1/16 (1.6)
MSP-2-01	MSP-2-19	MSPM-2-01	MSPM-2-19	DLMSP-2-01	DLMSPM-2-01	DLCBST-2-01	1/8 (3.2)
MSP-3-01	MSP-3-19	MSPM-3-01	MSPM-3-19	DLMSP-3-01	DLMSPM-3-01	DLCBST-3-01	3/16 (4.8)
MSP-4-01	MSP-4-19	MSPM-4-01	MSPM-4-19	DLMSP-4-01	DLMSPM-4-01	DLCBST-4-01	1/4 (6.4)
MSP-5-01	MSP-5-19	MSPM-5-01	MSPM-5-19	DLMSP-5-01	DLMSPM-5-01	DLCBST-5-01	5/16 (7.9)
MSP-6-01	MSP-6-19	MSPM-6-01	MSPM-6-19	DLMSP-6-01	DLMSPM-6-01	DLCBST-6-01	3/8 (9.5)
MSP-7-01	MSP-7-19	MSPM-7-01	MSPM-7-19	DLMSP-7-01	DLMSPM-7-01	DLCBST-7-01	7/16 (11.1)
MSP-8-01	MSP-8-19	MSPM-8-01	MSPM-8-19	DLMSP-8-01	DLMSPM-8-01	DLCBST-8-01	1/2 (12.7)
MSP-9-01	MSP-9-19	MSPM-9-01	MSPM-9-19	DLMSP-9-01	DLMSPM-9-01	DLCBST-9-01	9/16 (14.3)
MSP-10-01	MSP-10-19	MSPM-10-01	MSPM-10-19	DLMSP-10-01	DLMSPM-10-01	DLCBST-10-01	5/8 (15.9)
MSP-11-01	MSP-11-19	Not Available	Not Available	Not Available	Not Available	Not Available	11/16 (17.5)
MSP-12-01	MSP-12-19	MSPM-12-01	MSPM-12-19	DLMSP-12-01	DLMSPM-12-01	Not Available	3/4 (19.1)
MSP-13-01	MSP-13-19	MSPM-13-01	MSPM-13-19	Not Available	DLMSPM-13-01	Not Available	13/16 (20.6)
MSP-14-01	MSP-14-19	MSPM-14-01	MSPM-14-19	DLMSP-14-01	DLMSPM-14-01	Not Available	7/8 (22.2)
MSP-16-01	MSP-16-19	MSPM-16-01	MSPM-16-19	DLMSP-16-01	DLMSPM-16-01	Not Available	1 (25.4)
MSP-18-01	MSP-18-19	MSPM-18-01	MSPM-18-19	DLMSP-18-01	DLMSPM-18-01	Not Available	1-1/8 (28.6)
MSP-20-01	MSP-20-19	MSPM-20-01	MSPM-20-19	DLMSP-20-01	DLMSPM-20-01	Not Available	1-1/4 (31.7)
MSP-22-01	MSP-22-19	MSPM-22-01	MSPM-22-19	DLMSP-22-01	DLMSPM-22-01	Not Available	1-3/8 (34.9)
MSP-24-01	MSP-24-19	MSPM-24-01	MSPM-24-19	DLMSP-24-01	DLMSPM-24-01	Not Available	1-1/2 (38.1)

*Available in UL94 V0 material by special order. To order, replace -01 with -19.

800-621-1892
ANGIC
Get quote
Angic Global Solutions 1-888-872-0690
https://www.AngicGlobal.com Sales@AngicGlobal.com

LMSP
Locking Miniature Support Post

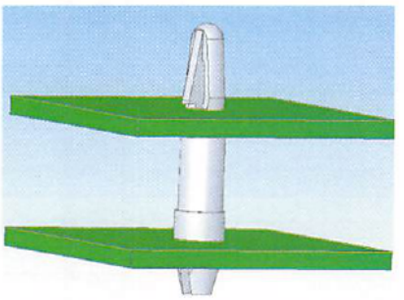

Top Hole: Snap-lock: .125 ± .002 (3.18 ± 0.05)
Panel Thickness: .062 (1.57)

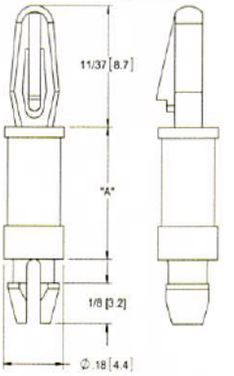

Bottom Hole: Snap-lock: .125 ± .002 (3.18 ± 0.05)
Panel Thickness: .062 (1.57)

Mat'l: Nylon 6/6, RMS-01 Color: Natural	Mat'l: Nylon 6/6, RMS-19 Color: Natural	Standard Pack: 1,000 per bag "A" Standoff Height ± .015 (0.4)
LMSP-2-01	LMSP-2-19	1/8 (3.2)
LMSP-3-01	LMSP-3-19	3/16 (4.8)
LMSP-4-01	LMSP-4-19	1/4 (6.4)
LMSP-5-01	LMSP-5-19	5/16 (7.9)
LMSP-6-01	LMSP-6-19	3/8 (9.5)
LMSP-7-01	LMSP-7-19	7/16 (11.1)
LMSP-8-01	LMSP-8-19	1/2 (12.7)
LMSP-9-01	LMSP-9-19	9/16 (14.3)
LMSP-10-01	LMSP-10-19	5/8 (15.9)
LMSP-12-01	LMSP-12-19	3/4 (19.1)
LMSP-14-01	LMSP-14-19	7/8 (22.2)

DLSP
Dual Locking Support Post Metric

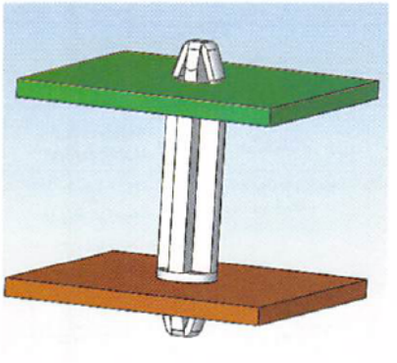

Features
- Installs quickly by hand

Top Hole: Snap-lock: 4 ± 0.08mm
Panel Thickness: 1.6mm

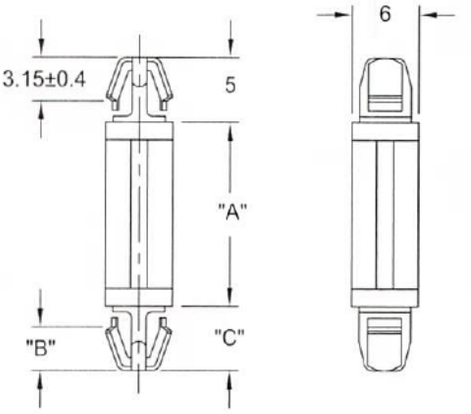

Bottom Hole: Snap-lock: DLSP-1: 4 ± 0.08mm.
DLSP-3: 4.8 ± 0.08mm
Panel Thickness: 1.6mm

DLSP-1	DLSP-3	Standard Pack: 1,000 per bag
Mat'l: Nylon 6/6, RMS-01* Color: Natural	Mat'l: Nylon 6/6, RMS-01* Color: Natural	"A" Standoff Height ± 0.4
"B" = 3.15±0.4 "C" = 5	"B" = 3.7±0.4 "C" = 5.5	
DLSP-1-3M-01	DLSP-3-3M-01	3
DLSP-1-4M-01	DLSP-3-4M-01	4
DLSP-1-6M-01	DLSP-3-6M-01	6
DLSP-1-8M-01	DLSP-3-8M-01	8
DLSP-1-10M-01	DLSP-3-10M-01	10
DLSP-1-12M-01	DLSP-3-12M-01	12
DLSP-1-14M-01	DLSP-3-14M-01	14
DLSP-1-16M-01	DLSP-3-16M-01	16
DLSP-1-18M-01	DLSP-3-18M-01	18
All dimensions in millimeters		
*Available in UL94 V0 material by special order. To order, replace -01 with -19.		
Available to snap into a 4.8mm hole on both ends by special order. To order, use part number DLSP-2-XX-XX.		
Available by special order; 5,000 piece minimum.		

KSLSP
Key Slot Locking Support Post

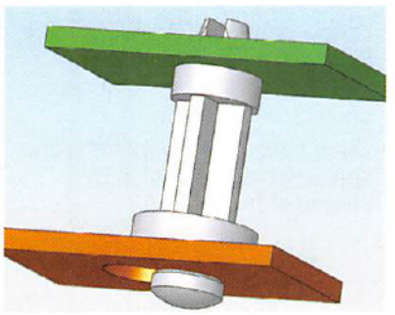

Features
- Chassis mount end slides in and is easily removed for repairs or changes
- Protrusion of only 3/32 (2.4) on underside of chassis

Top Hole: Snap-lock: KSLSP1: .156 ± .003 (4 ± 0.08)
KSLSP2: .187 ± .003 (4.75 ± 0.08)
Panel Thickness: .062 (1.57)

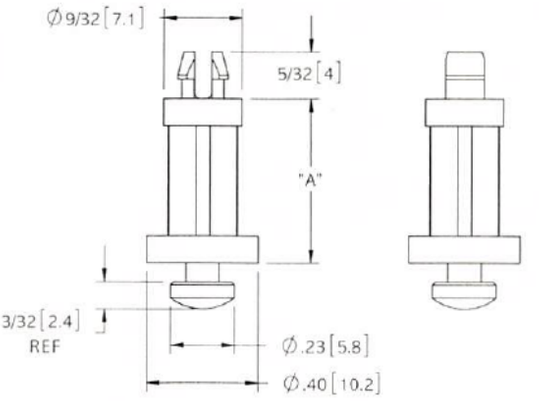

Bottom Hole: See Mounting Key Slot Detail
Panel Thickness: .062 (1.57)

KSLSP1	KSLSP2	Standard Pack: 1,000 per bag
Mat'l: Nylon 6/6, RMS-01* Color: Natural	Mat'l: Nylon 6/6, RMS-01* Color: Natural	"A" Standoff Height ± .015 (0.4)
KSLSP1-3-01	KSLSP2-3-01	3/16 (4.8)
KSLSP1-4-01	KSLSP2-4-01	1/4 (6.4)
KSLSP1-6-01	KSLSP2-6-01	3/8 (9.5)
KSLSP1-8-01	KSLSP2-8-01	1/2 (12.7)
KSLSP1-10-01	KSLSP2-10-01	5/8 (15.9)
*Available in UL94 V0 material by special order. To order, replace -01 with -19.		

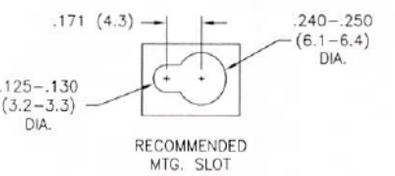

539-4060 Sam
Get quote
Angic Global Solutions 1-888-872-0690
https://www.AngicGlobal.com Sales@AngicGlobal.com

A

MDLSP 1 & 2
Mini Dual Locking Support Post

Top Hole: Snap-lock: MDLSP1: .098 ± .002 (2.5 ± 0.05)
MDLSP2: .138 ± .002 (3.5 ± 0.05)
Panel Thickness: .062 (1.57)

Fig. 1

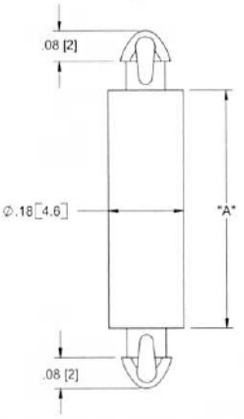

Fig. 2

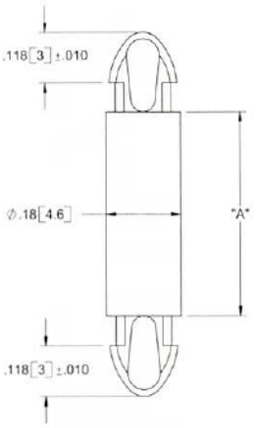

Bottom Hole: Snap-lock: MDLSP1: .098 ± .002 (2.5 ± 0.05)
MDLSP2: .138 ± .002 (3.5 ± 0.05)
Panel Thickness: .062 (1.57)

MDLSP1 (Fig. 1)	MDLSP2 (Fig. 2)	Standard Pack: 1,000 per bag
Mat'l: Nylon 6/6, RMS-01* Color: Natural	Mat'l: Nylon 6/6, RMS-01* Color: Natural	"A" Standoff Height ± .015 (0.4)
MDLSP1-02M-01	MDLSP2-02M-01	.078 (2)
MDLSP1-03M-01	MDLSP2-03M-01	.118 (3)
MDLSP1-04M-01	MDLSP2-04M-01	.156 (4)
MDLSP1-05M-01	MDLSP2-05M-01	.197 (5)
MDLSP1-06M-01	MDLSP2-06M-01	.236 (6)
MDLSP1-07M-01	MDLSP2-07M-01	.276 (7)
MDLSP1-08M-01	MDLSP2-08M-01	.314 (8)
MDLSP1-09M-01	MDLSP2-09M-01	.354 (9)
MDLSP1-10M-01	MDLSP2-10M-01	.394 (10)
MDLSP1-12M-01	MDLSP2-12M-01	.472 (12)
MDLSP1-14M-01	MDLSP2-14M-01	.551 (14)
MDLSP1-16M-01	MDLSP2-16M-01	.630 (16)
MDLSP1-18M-01	MDLSP2-18M-01	.709 (18)
MDLSP1-20M-01	MDLSP2-20M-01	.787 (20)
MDLSP1-22M-01	MDLSP2-22M-01	.866 (22)
*Available in UL94 V0 material by special order. To order, replace -01 with -19.		
MDLSPKX-XXM-01 with top to fit in a .141 (3.6) thick panel available by special order only. Also available in UL94 V0 material.		

MDLSP3
Mini Dual Lock Support Post

NEW

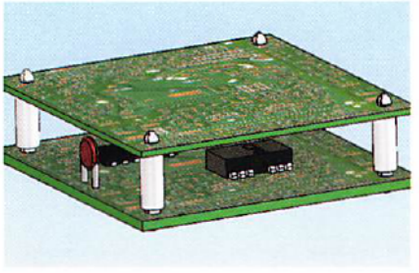

Features
- Teardrop style mounting ends eases insertion and increases holding power with little protrusion under the chassis

Top Hole: Snap-lock: .098 ± .002 (2.5 ± 0.05)
Panel Thickness: .063 (1.6)

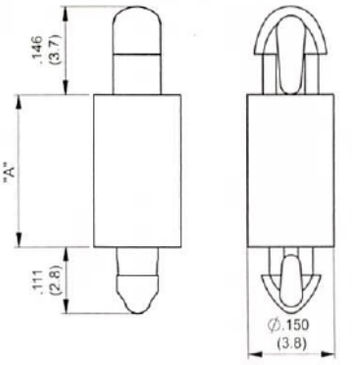

Bottom Hole: Snap-lock: .08 ± .002 (2 ± 0.05)
Panel Thickness: .04 (1)

MDLSP3	Standard Pack: 1,000 per bag
Mat'l: Nylon 6/6, RMS-01* Color: Natural	"A" Standoff Height
MDLSP3-1-01	.063 (1.6)
MDLSP3-2-01	.126 (3.2)
MDLSP3-3-01	.189 (4.8)
MDLSP3-4-01	.252 (6.4)
MDLSP3-5-01	.311 (7.9)
MDLSP3-6-01	.374 (9.5)
*Available in UL94 V0 material by special order. To order, replace -01 with -19.	

TCS
Touch Control Spacer

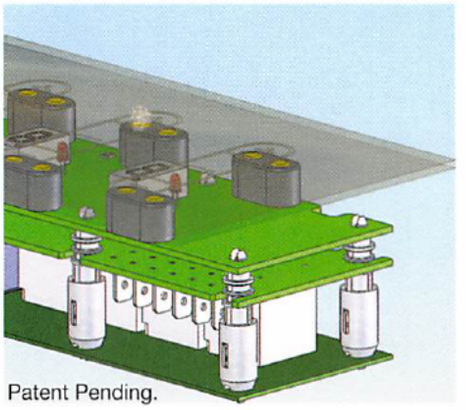

Patent Pending.

Top Hole: Snap-lock: .165 ± .002 (4.2 ± 0.05)
Panel Thickness: .063 ± .002 (1.6 ± 0.05)

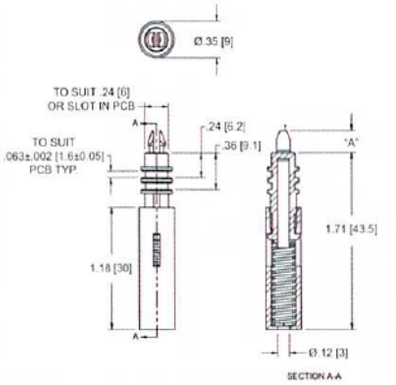

Bottom Hole: To locate over a vertical tab

Features
- Spring provides continuous force to light sensors mounted onto a PCB so that they are in constant contact with the cover
- Other spring forces, mounts, and spacer lengths available by special order

Standard Pack: 500 per bag			
Color: Natural	"A"	Spacer Material	Spring Material
TCS-1	.21 (5.4)	Nylon 6/6, RMS-01	Mild Steel S300 Pb, RMS-230
TCS-2		Nylon 6/6, RMS-19	
TCS-3	.17 (4.2)	Nylon 6/6, RMS-01	
TCS-4		Nylon 6/6, RMS-19	
Travel: .12 (3)			

-800-621-1892
ANGIC GLOBAL SOLUTIONS Get quote
Angic Global Solutions 1-888-872-0690
https://www.AngicGlobal.com Sales@AngicGlobal.com

LCBSB/CBSB
Circuit Board Support on Base

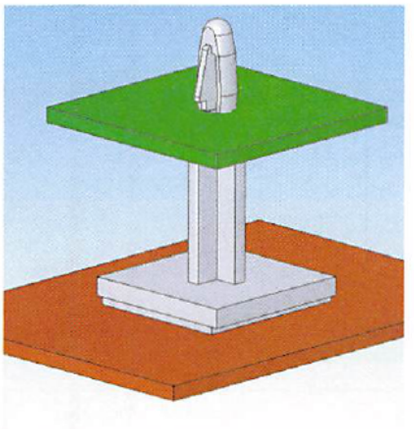

Features

- Eliminates the need for a mounting hole on the chassis

LCBSB

Top Hole: Snap-lock: .156 ± .003 (4 ± 0.08)
Panel Thickness: .062 (1.57)

Fig. 1

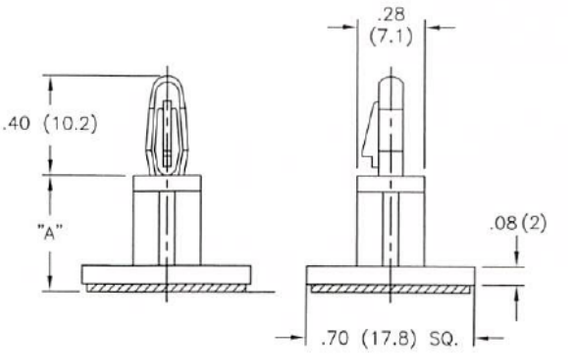

CBSB

Top Hole: Snap-fit: .156 ± .003 (4 ± 0.08)
Panel Thickness: .062 (1.57)

Fig. 2

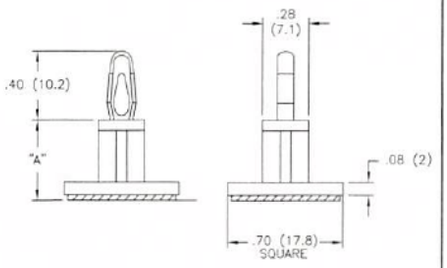

LCBSBM

Top Hole: Snap-lock: .125 ± .002 (3.18 ± 0.05)
Panel Thickness: .062 (1.57)

Fig. 3

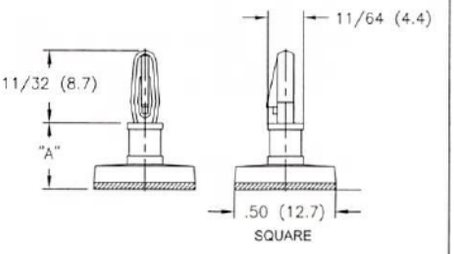

CBSBT

Top Hole: Snap-lock: .100 ± .002 (2.54 ± 0.05)
Panel Thickness: .064 (1.63) Max.

Fig. 4

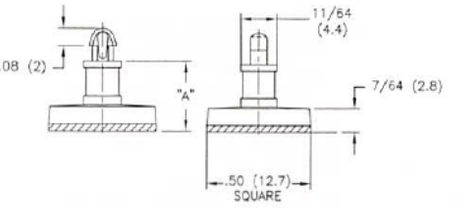

LCBSB (Fig. 1)	CBSB (Fig. 2)	LCBSBM (Fig. 3)	CBSBT (Fig. 4)	Standard Pack: 1,000 per bag
Mat'l: Nylon 6/6, RMS-01* Color: Natural	Mat'l: Nylon 6/6, RMS-01* Color: Natural	Mat'l: Nylon 6/6, RMS-01* Color: Natural	Mat'l: Nylon 6/6, RMS-01* Color: Natural	"A" Standoff Height ± .015 (0.4)
LCBSB-3-01A-RT	CBSB-3-01A-RT	LCBSBM-3-01A-RT	CBSBT-3-01A-RT	3/16 (4.8)
LCBSB-4-01A-RT	CBSB-4-01A-RT	LCBSBM-4-01A-RT	CBSBT-4-01A-RT	1/4 (6.4)
Not Available	Not Available	LCBSBM-5-01A-RT	CBSBT-5-01A-RT	5/16 (7.9)
LCBSB-6-01A-RT	CBSB-6-01A-RT	LCBSBM-6-01A-RT	CBSBT-6-01A-RT	3/8 (9.5)
Special Order	Special Order	LCBSBM-7-01A-RT	CBSBT-7-01A-RT	7/16 (11.1)
LCBSB-8-01A-RT	CBSB-8-01A-RT	LCBSBM-8-01A-RT	CBSBT-8-01A-RT	1/2 (12.7)
Not Available	Not Available	LCBSBM-9-01A-RT	CBSBT-9-01A-RT	9/16 (14.3)
LCBSB-10-01A-RT	CBSB-10-01A-RT	LCBSBM-10-01A-RT	CBSBT-10-01A-RT	5/8 (15.9)
LCBSB-12-01A-RT	CBSB-12-01A-RT	Not Available	Not Available	3/4 (19.1)
LCBSB-14-01A-RT	CBSB-14-01A-RT	Not Available	Not Available	7/8 (22.2)
LCBSB-16-01A-RT	CBSB-16-01A-RT	Not Available	Not Available	1 (25.4)
LCBSB-18-01A-RT	CBSB-18-01A-RT	Not Available	Not Available	1-1/8 (28.6)
*Available in UL94 V0 material by special order. To order, replace -01 with -19.				
Adhesive Backing: RMS-15, 1/32 (0.8) thick double sided adhesive tape with release tab.				
Also available without adhesive by special order; 5,000 piece minimum.				

Metric Lengths	
LCBSB (Fig. 1)	Standard Pack: 1,000 per bag
Mat'l: Nylon 6/6, RMS-01* Color: Blue	"A" Standoff Height ± 0.4
LCBSB-6M-01A-RT	6
LCBSB-8M-01A-RT	8
LCBSB-10M-01A-RT	10
LCBSB-12M-01A-RT	12
LCBSB-14M-01A-RT	14
LCBSB-16M-01A-RT	16
*Available in UL94 V0 material. To order, replace -01 with -19.	
Adhesive Backing: RMS-15, 1/32 (0.8) thick double sided adhesive tape with release tab. Also available without adhesive.	
Available by special order; 5,000 piece minimum.	

539-4060 Sam
Get quote
Angic Global Solutions 1-888-872-0690
https://www.AngicGlobal.com Sales@AngicGlobal.com

A

PST/CPST
Push Spacer Teardrop

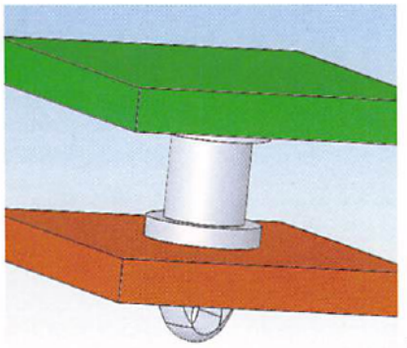

Fig. 1

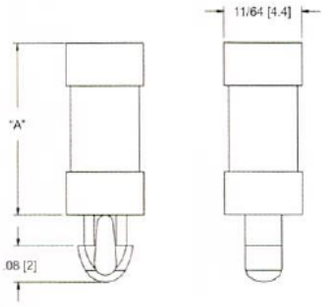

Bottom Hole: Snap-lock: .100 ± .002 (2.54 ± 0.05)
Panel Thickness: .064 (1.63) Max.

Fig. 2

NEW

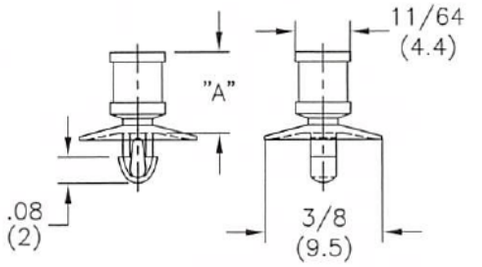

Bottom Hole: Snap-lock: .100 ± .002 (2.54 ± 0.05)
Panel Thickness: .062 (1.57) Max.

Features

- Allows for easy access to the underside of the PCB
- Provides additional support for heavily loaded PCBs
- Teardrop style mounting end eases insertion and increases holding power with little protrusion under the chassis

PST (Fig. 1)	CPST (Fig. 2)	Standard Pack: 1,000 per bag
Mat'l: Nylon 6/6, RMS-01* Color: Natural	Mat'l: Nylon 6/6, RMS-01* Color: Natural	"A" Standoff Height ± .015 (0.4)
PST-1-01	Not Available	1/16 (1.6)
PST-2-01	CPST-2-01	1/8 (3.2)
PST-3-01	CPST-3-01	3/16 (4.8)
PST-4-01	CPST-4-01	1/4 (6.4)
PST-5-01	CPST-5-01	5/16 (7.9)
PST-6-01	CPST-6-01	3/8 (9.5)
PST-7-01	CPST-7-01	7/16 (11.1)
PST-8-01	CPST-8-01	1/2 (12.7)
PST-9-01	CPST-9-01	9/16 (14.3)
PST-10-01	CPST-10-01	5/8 (15.9)
*Available in UL94 V0 material by special order. To order, replace -01 with -19.		

PS
Push Spacer

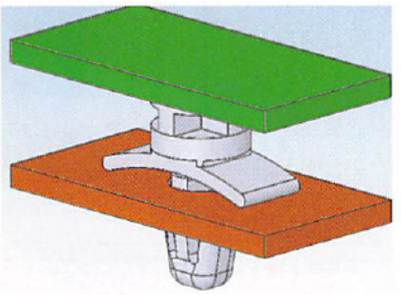

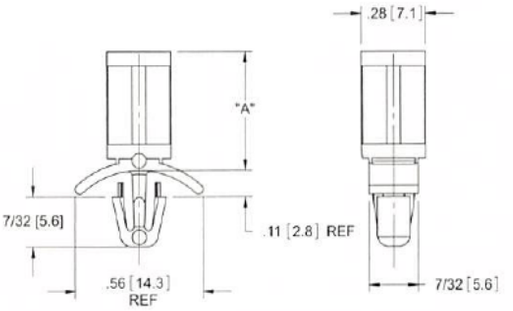

Bottom Hole: Snap-lock: .187 ± .003 (4.75 ± 0.08)
Panel Thickness: .031 - .078 (0.79 - 1.98)

PS		Standard Pack: 1,000 per bag
Mat'l: Nylon 6/6, RMS-01 Color: Natural	Mat'l: Nylon 6/6, RMS-19 Color: Natural	"A" Standoff Height ± .015 (0.4)
PS-3-01	PS-3-19	3/16 (4.8)
PS-4-01	PS-4-19	1/4 (6.4)
PS-6-01	PS-6-19	3/8 (9.5)
PS-7-01	PS-7-19	7/16 (11.1)
PS-8-01	PS-8-19	1/2 (12.7)
PS-10-01	PS-10-19	5/8 (15.9)
PS-12-01	PS-12-19	3/4 (19.1)
PS-14-01	PS-14-19	7/8 (22.2)
Also available for a .078 - .140 (1.98 - 3.56) thick chassis by special order. To order, use P/N: PS-2-XX-XX.		

Features

- The tension wings on the chassis end provide a tight fit

PSM
Mini Push Spacer

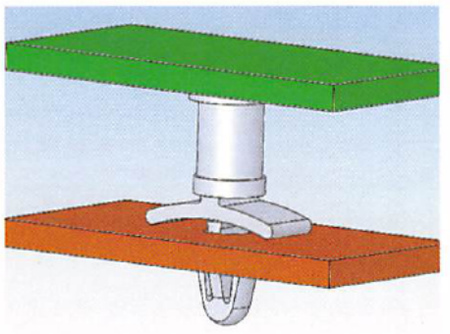

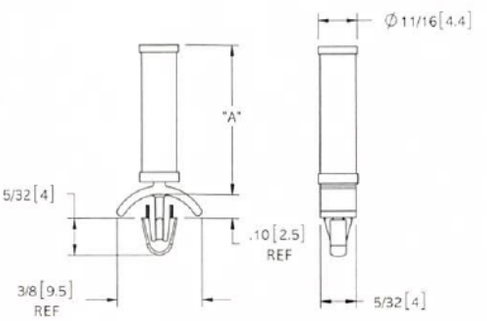

Bottom Hole: Snap-lock: .125 ± .002 (3.18 ± 0.05)
Panel Thickness: .031 - .078 (0.79 - 1.98)

PSM	Standard Pack: 1,000 per bag
Mat'l: Nylon 6/6, RMS-01* Color: Natural	"A" Standoff Height ± .015 (0.4)
PSM-2-01	1/8 (3.2)
PSM-3-01	3/16 (4.8)
PSM-4-01	1/4 (6.4)
PSM-5-01	5/16 (7.9)
PSM-6-01	3/8 (9.5)
PSM-7-01	7/16 (11.1)
PSM-8-01	1/2 (12.7)
PSM-9-01	9/16 (14.3)
PSM-10-01	5/8 (15.9)
*Available in UL94 V0 material by special order. To order, replace -01 with -19.	

800-621-1892
ANGIC
Get quote
Angic Global Solutions 1-888-872-0690
https://www.AngicGlobal.com Sales@AngicGlobal.com

CSP & CSR
Collar Spacer

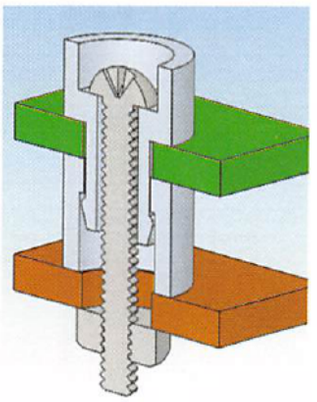

Top Hole: See Table
Panel Thickness: .093 (2.36) Max.

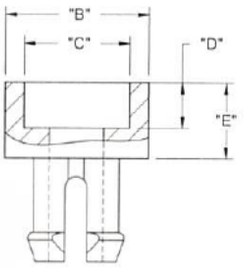

CSP(PIN)

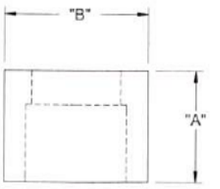

CSR (RETAINER)

Bottom Hole: See Table

CSR Retainer	Mat'l: Nylon 6/6, RMS-01 Color: Natural Standard Pack: 1,000 per bag		
	"A" ±.010	"B" ±.010	Mating Pin (CSP) No.
CSR4-224-01	.224 (5.7)	.295 (7.5)	CSP4-01
CSR4-295-01	.295 (7.5)		
CSR4-394-01	.394 (10)		
CSR4-591-01	.591 (15)		
CSR4-787-01	.787 (20)		
CSR6-224-01	.224 (5.7)	.394 (10)	CSP6-01
CSR6-295-01	.295 (7.5)		
CSR6-394-01	.394 (10)		
CSR6-591-01	.591 (15)		
CSR6-787-01	.787 (20)		
CSR8-224-01	.224 (5.7)	.436 (11)	CSP8-01
CSR8-295-01	.295 (7.5)		
CSR8-394-01	.394 (10)		
CSR8-591-01	.591 (15)		
CSR8-787-01	.787 (20)		

Features
- Top piece locks into bottom spacer to capture PCB
- Binding head type screw is recommended

CSP Pin	Mat'l: Nylon 6/6, RMS-01 Color: Natural Standard Pack: 1,000 per bag					
	"B" ±.010	"C" Dia.	"D" Ref.	"E" Ref.	Mounting Hole Dia. ±.003 (0.08)	Recommended Screw Size
CSP4-01	.295 (7.5)	-	-	.10 (2.5)	.195 (5)	#4
CSP6-01	.394 (10)	.29 (7.4)	.12 (3)	.20 (5.1)	.256 (6.5)	#6
CSP8-01	.436 (11.1)	.33 (8.4)	.14 (3.6)	.22 (5.6)	.272 (6.9)	#8

MSNE
Spacer Nut

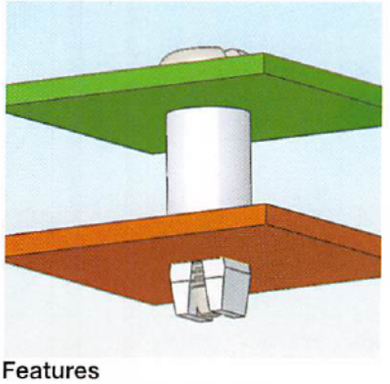

Top Hole: For a Metal #4AB Self-Tapping Screw

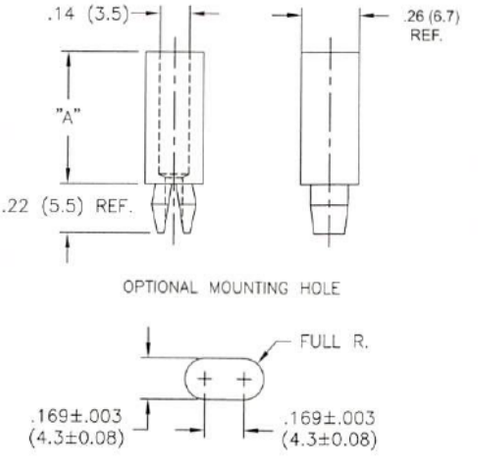

Bottom Hole: .169 ± .003 (4.3 ± 0.08) Square Hole.
See also Optional Mounting Hole
Panel Thickness: 0.63 (1.6)

Features
- Insulates screw and provides spacing height
- Square mounting hole has anti-rotation benefits
- Metal self-tapping screw is needed to thread spacer

MSNE	Standard Pack: 1,000 per bag
Mat'l: Nylon 6/6, RMS-01* Color: Natural	"A" Standoff Height ± .015 (0.4)
MSNE-2-01	1/8 (3.2)
MSNE-4M-01	.16 (4)
MSNE-3-01	3/16 (4.8)
MSNE-6M-01	.24 (6)
MSNE-4-01	1/4 (6.4)
MSNE-5-01	5/16 (7.9)
MSNE-8M-01	.31 (8)
MSNE-6-01	3/8 (9.5)
MSNE-10M-01	.39 (10)
MSNE-12M-01	.47 (12)
MSNE-8-01	1/2 (12.7)
MSNE-10-01	5/8 (15.9)
MSNE-12-01	3/4 (19.1)
MSNE-16-01	1 (25.4)
*Available in UL94 V0 material by special order. To order, replace -01 with -19.	

SN
Spacer Nut

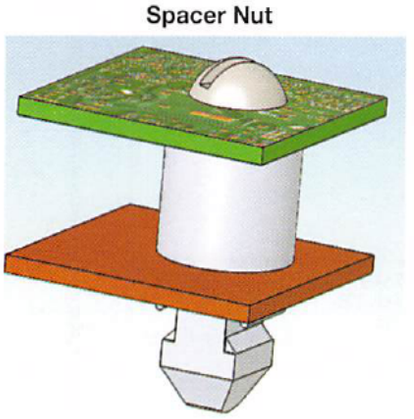

Top Hole: For a Metal #8 Self-Tapping Screw (Type 25)

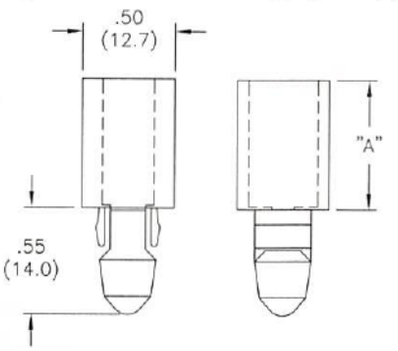

Bottom Hole: .312 (7.9) Square Hole
Panel Thickness: .062 (1.57)

Mat'l: Polycarbonate, RMS-3 Color: Clear	Standard Pack: 1,000 per bag
	"A" ±.015 (0.4)
SN-125	1/8 (3.2)
SN-187	3/16 (4.8)
SN-250	1/4 (6.4)
SN-312	5/16 (8)
SN-375	3/8 (9.5)
SN-500	1/2 (12.7)

ANGIC
Get quote
Angic Global Solutions 1-888-872-0690
https://www.AngicGlobal.com Sales@AngicGlobal.com

A

EG
Expansion Grommet

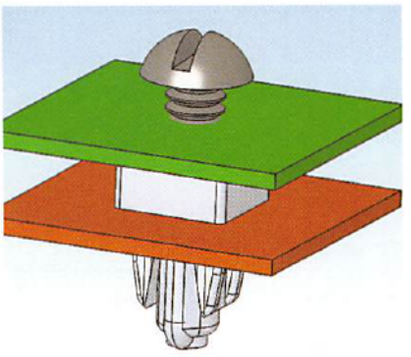

Top Hole: For #8 or #10 Self-Tapping Sheet Metal Screw

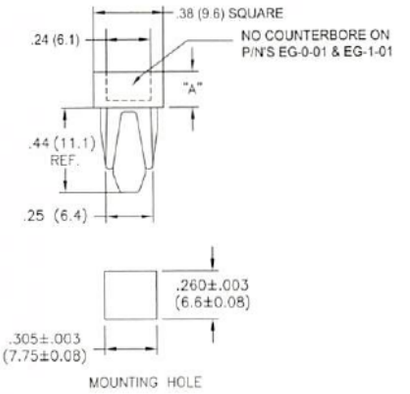

Panel Thickness: .020 - .076 (0.51 - 1.93)

Mat'l: Nylon 6/6, RMS-01* Color: Natural	Standard Pack: 1,000 per bag
	"A" Standoff Height ±.015 (0.4)
EG-0-01	1/32 (0.8)
EG-1-01	1/16 (1.6)
EG-2-01	1/8 (3.2)
EG-3-01	3/16 (4.8)
EG-4-01	1/4 (6.4)
EG-5-01	5/16 (7.9)
EG-6-01	3/8 (9.5)
EG-7-01	7/16 (11.1)
EG-8-01	1/2 (12.7)
*Available in UL94 V0 material by special order. To order, replace -01 with -19.	

SRSG
Self-Retaining Screw Grommet

NEW

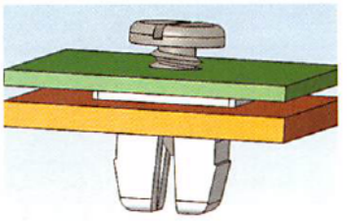

Head Style 2

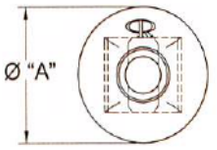

Fig. 2

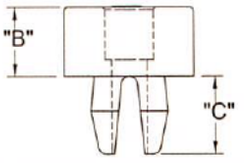

Head Style 1

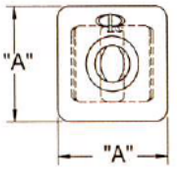

Fig. 1

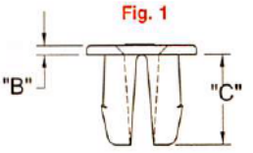

SRSG				Standard Pack: 1,000 per bag				
Mat'l: Nylon 6/6, RMS-01 Color: Natural	"A" Head Size	"B" Head Thickness	"C" Prong Length	Mounting Hole Size (Square)	Panel Thickness Range	Screw Size	Fig.	Head Style
SRSG6-04-01	.38x.38 (9.7x9.7)	.04 (1)	.280 (7.1)	.245-.255 (6.22-6.48)	.031-.125 (0.79-3.18)	#6	2	1
SRSG-1D	.490 (12.4) Dia.	.240-.260 (6.1-6.6)		.281-.286 (7.14-7.26)	*.031-.109 (0.79-2.77)	#8 or #10	1	2
SRSG-2D		.307-.317 (7.8-8.1)						
SRSG-3D		.360-.390 (9.1-9.9)						
SRSG-4D		.485-.515 (12.3-13.1)						
SRSG-5D		.610-.640 (15.5-16.3)						
SRSG-6D		.672-.702 (17.1-17.8)						
SRSG-7S	.405x.405 (10.3x10.3)	.028 - .038 (0.7 - 1)	.325 (8.3)	.275-.290 (6.99-7.37)	.031-.130 (0.79-3.3)		2	1
SRSG-8S		.057 - .067 (1.4 - 1.7)						
SRSG-9D	.500 (12.7) Dia.	.093-.103 (2.4-2.6)		.280-.295 (7.11-7.49)	.031-.156 (0.79-3.96)		1	2
SRSG-10D		.125-.135 (3.2-3.4)						
SRSG-11D		.360-.390 (9.1-9.9)						
*At minimum panel thickness, part will only function with a #10 screw.								

GCBS
Grounding Circuit Board Support

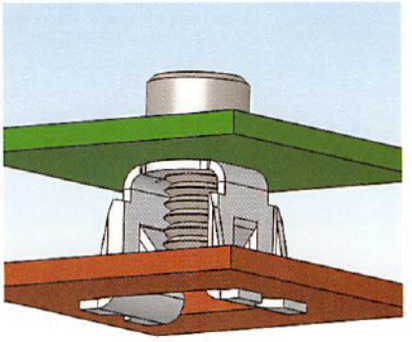

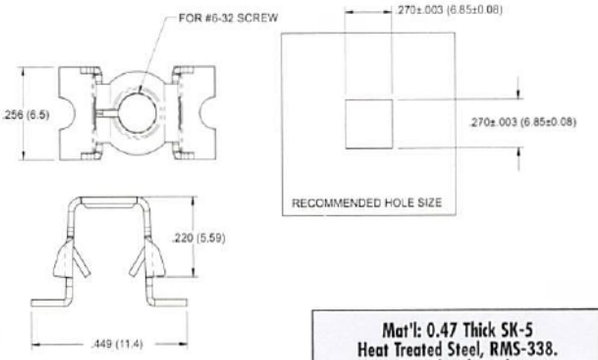

Mat'l: 0.47 Thick SK-5 Heat Treated Steel, RMS-338. Zinc Plated Finish, RMS-237	Standard Pack: 1,000 per bag
	"A" Standoff Height ±.008 (0.2)
GCBS-3	.190 (4.83)

-800-621-1892
Get quote
Angic Global Solutions 1-888-872-0690
https://www.AngicGlobal.com Sales@AngicGlobal.com

Card Guides

General Features

In chassis and rack system applications, PCB access needs to be quick, accurate, safe and easily accessible to avoid damage to the components on the board, which need to be utilized without compromising on overall performance. Richco's series of card guides and pullers provide a solution to PCB safety and access for when routine installation, maintenance and repair needs to take place. Richco offers a range of vertical, horizontal mount and tensioning rack card guides. Vertical design keeps boards in place, yet allows easy slide in and slide out. Horizontal guides are available with a funnel entry for easier board insertion, while others come with tension grips, applying spring pressure to hold the board securely in place.

Typical Applications

- Computers
- Telecommunications – Rack and panel systems
- Military equipment – Radar and intelligence equipment

Material

Most of Richco's card guides and pullers are available in Nylon 6/6 or polycarbonate. Please contact your local Richco office for other material requirements.

Pullers

General Features

Richco's pullers are designed to solve difficult insertion and extraction problems associated with removing large PCB's and tight gripping multi-pin edge connectors. Our pullers use a cam in/out action enabling leverages of up to 4:1. Ease of use, installation and protection from undue stress for damage-free insertions and extractions of PCB's, components, and connectors are the main benefits from the use of our pullers. Passivated stainless steel spring pins as per MIL-P-10971 are provided with certain ejectors. Richco pullers have been designed to meet the increasing need to support PCB's mounted in a vertical position in order to save space. Our wide selection accommodates various board sizes and allows for paired mounting and gang or tandem mounting. The use of standard fasteners simplifies mounting.

Typical Applications

- Computers
- Telecommunications – Rack and panel systems
- Military equipment – Radar and intelligence equipment

Introduction

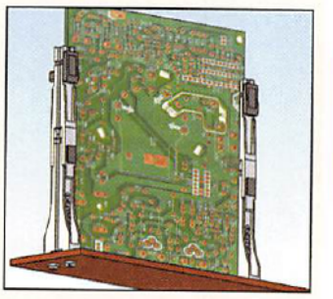

Vertical Mount Card Guide

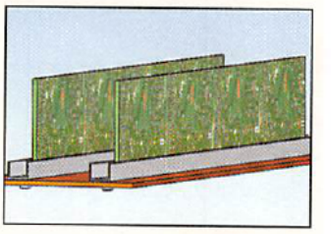

Narrow Card Guide

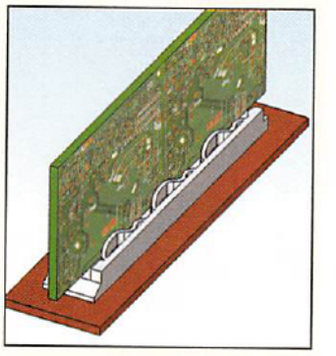

Tension Rack Card Guide

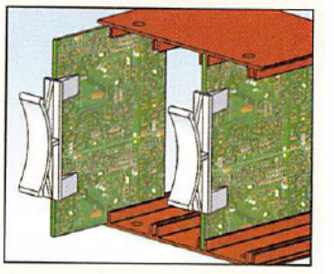

Circuit Board Puller

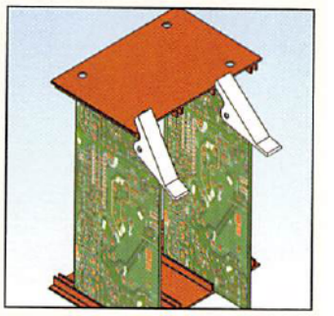

Card Ejector

ANGIC
Get quote
9-4060 Sampl
Angic Global Solutions 1-888-872-0690
https://www.AngicGlobal.com Sales@AngicGlobal.com

B

VMCG
Vertical Mount Card Guides

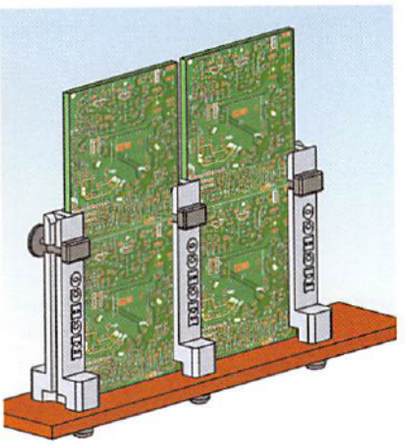

Fig. 1

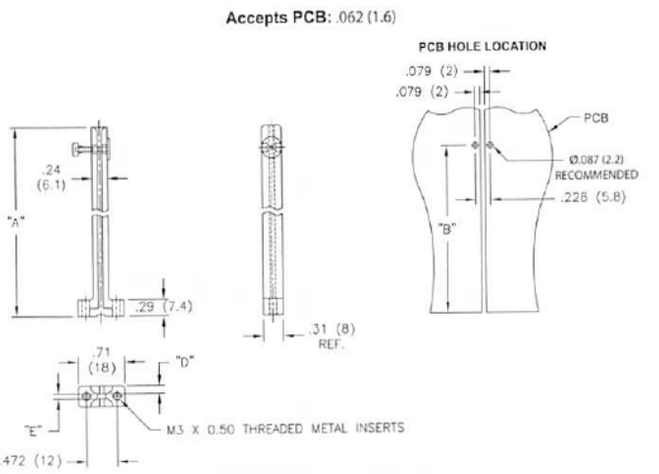

Mounts into Hole: To accept M3 screw
Mounts Into Panel: Up to .125 (3.18) using screw provided

Features

- Double channel permits side-by-side mounting
- Screw mount card guides have metal threaded inserts for secure installation for up to .125 (3.18) panel thickness
- Includes mounting hardware: screw, washer and lockwasher

Fig. 2

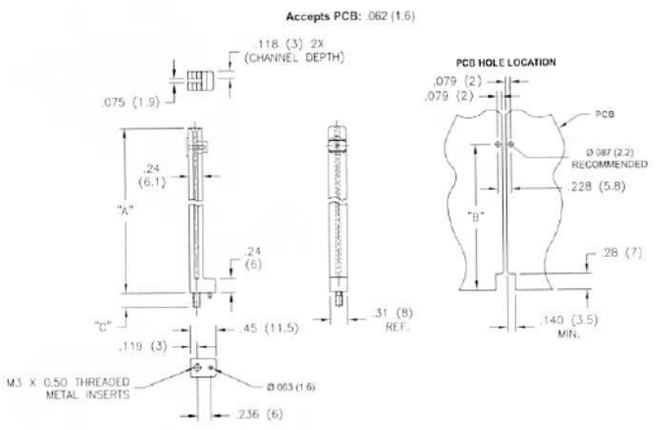

Mounts Into Hole: To accept M3 screw
Mounts Into Panel: Up to .125 (3.18)

Fig. 3

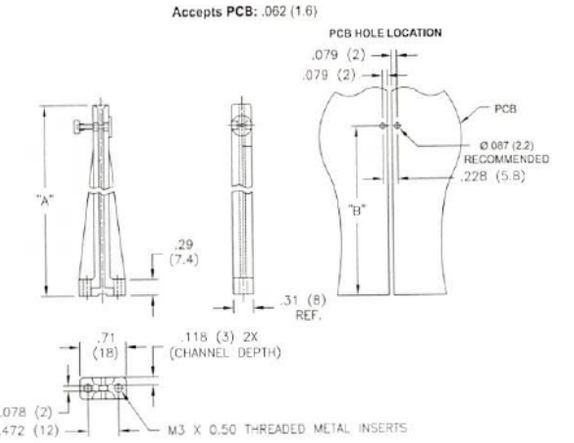

Mounts Into Hole: To accept M3 screw
Mounts Into Panel: Up to .125 (3.18)

Mat'l: Card Guide: Glass-filled Nylon 6, RMS-38 Color: Gray; Pin: HDPE RMS-284 Color: Black; Screws & Washers: Stainless Steel, RMS-228; Inserts: Brass, RMS-231	VMCG		Standard Pack: 100 per bag			
	"A"	"B"	"C"	"D"	"E"	Fig.
VMCG-50-MPBK-K	1.83 (46.5)	1.67 (42.3)	-	.104 (2.6)	.105 (2.7)	1
VMCG-65-MPBK-K	2.56 (65)	2.22 (56.5)	-	.118 (3)	.079 (2)	1
VMCG-70-MPBK-K	2.76 (70)	2.44 (62.5)	.22 (5.5)	-	-	2
VMCG-90-MPBK-K	3.54 (90)	3.21 (81.5)	-	.118 (3)	.079 (2)	1
VMCG-100-MPBK-K	3.94 (100)	3.62 (92)	.35 (9)	-	-	2
VMCG-135-MPBK-K	5.31 (135)	4.98 (126.5)	-	.118 (3)	.079 (2)	1
VMCG-160-MPBK-K	6.30 (160)	4.43 (112.5)	-	.118 (3)	.079 (2)	1
VMCG-320-MPBK-K	4.73 (120)	4.43 (112.5)	-	-	-	3
VMCG-330-MPBK-K	4.73 (120.1)	4.43 (112.5)	-	.118 (3)	.079 (2)	1
VMCG-360-MPBK-K	6.30 (160)	4.43 (112.5)	-	-	-	3

1-800-621-1892
Get quote
Angic Global Solutions 1-888-872-0690
https://www.AngicGlobal.com Sales@AngicGlobal.com

VMCGN
Vertical Mount Card Guides

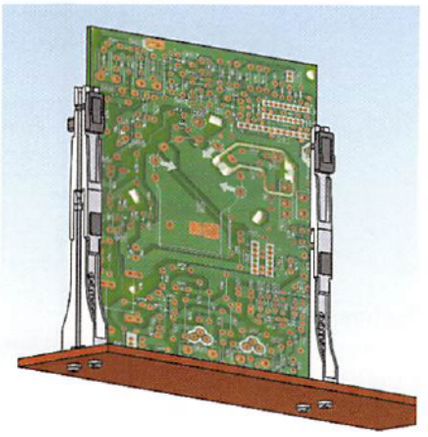

Features

- Extension piece (VMCGN-EX-40) can be purchased separately to add height to the guide
- Part numbers ending in "-K" include M3 threaded screw, washer and lock washer mounting hardware

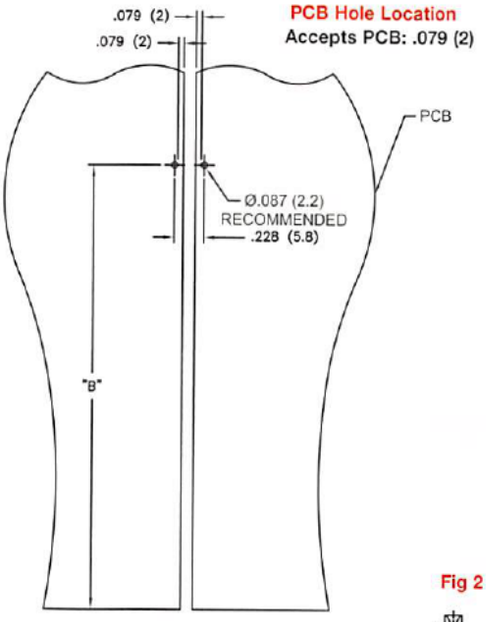

Fig. 1
Base

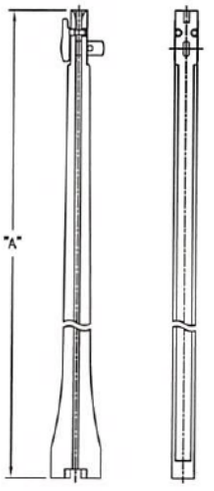

Fig. 2
Base

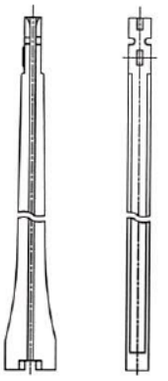

Fig. 3
Extension

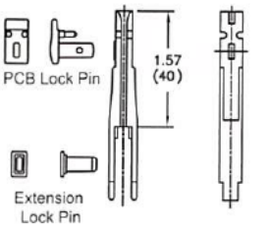

Fig 2 + Fig. 3 Assembly

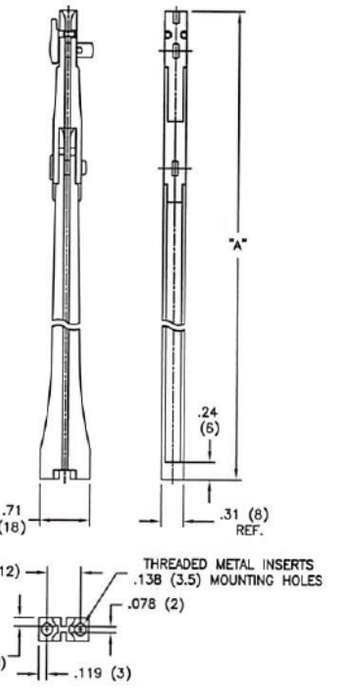

Material: Flame Retardant Polystyrene, RMS-117 Color: Card Guide - Blue, Locking Pins-White	Standard Pack: 100 per bag			
	"A"	"B"	Threaded Insert	Fig.
VMCGN-065-M3-LSWT-K	2.56 (65)	2.24 (57)	M3	1
VMCGN-065-4/40-LSWT			4/40	
VMCGN-105-M3-LSWT-K	4.13 (105)	3.82 (97)	M3	2 + 3
VMCGN-105-4/40-LSWT			4/40	
VMCGN-120-M3-LSWT-K	4.72 (120)	4.41 (112)	M3	1
VMCGN-120-4/40-LSWT			4/40	
VMCGN-160-M3-LSWT-K	6.30 (160)	5.98 (152)	M3	2 + 3
VMCGN-160-4/40-LSWT			4/40	
VMCGN-EX-40	1.57 (40)	1.26 (32)	-	3
VMCGN-EX-40 is supplied with (1) PC Board Lock Pin and (1) Extension Lock Pin.				

39-4060 Samp
Get quote
Angic Global Solutions 1-888-872-0690
https://www.AngicGlobal.com Sales@AngicGlobal.com

B

CBG
Circuit Board Guide

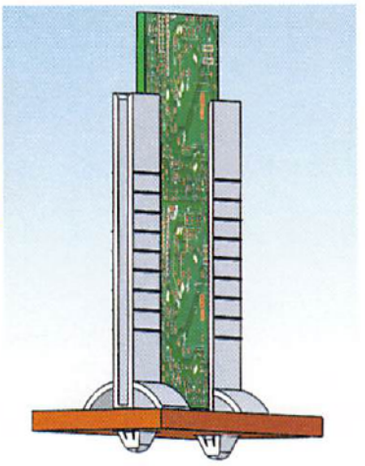

Accepts PCB: .062 (1.6)

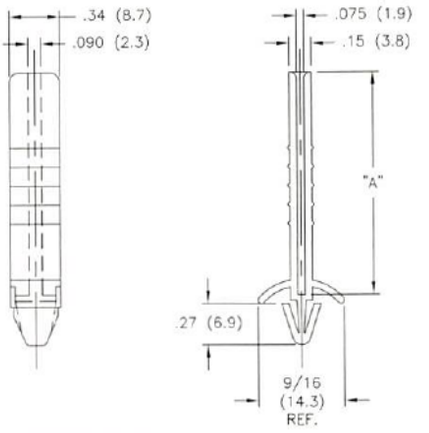

Mounts Into Hole: Snap-lock into rectangular hole .175±.003 (4.4±0.08) X .310±.003 (7.9±0.08)
Mounts Into Panel: .030 - .070 (0.8 - 1.8)

Standard Pack: 100 per bag	
Mat'l: Nylon 6/6, RMS-01* Color: Natural	"A" ± .015 (±0.4)
CBG-1-01	1.0 (25.4)
CBG-1.5-01	1.5 (38.1)
CBG-2-01	2.0 (50.8)
CBG-3-01	3.0 (76.2)

*Available in UL94 V0 material by special order. To order, replace -01 with -19.

Features
- Vertical mount for boards of any width
- Double channel permits side-by-side mounting

LCBG
Locking Circuit Board Guide

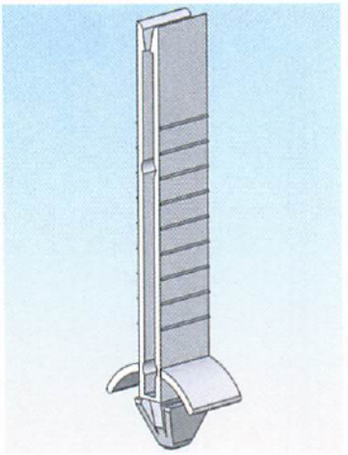

Accepts PCB: .062 (1.6)

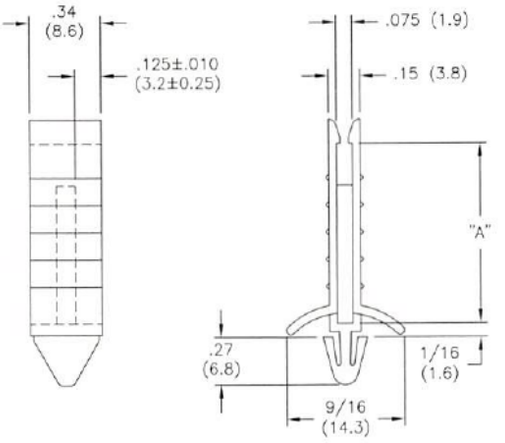

Mounts Into Hole: Snap-lock into rectangular hole .175±.003 (4.45±0.08) X .310±.003 (7.87±0.08)
Mounts Into Panel: .030 - .070 (0.76 - 1.78)

Standard Pack: 100 per bag	
Mat'l: Nylon 6/6, RMS-01* Color: Natural	"A" ± .010 (0.25)
LCBG-1-01	.880 (22.4)
LCBG-1.5-01	1.375 (34.9)
LCBG-2-01	1.870 (47.5)
LCBG-3-01	2.875 (73)

*Available in UL94 V0 material by special order. To order, replace -01 with -19.

Features
- Locking tab holds the PBC vertically in place

LCBG-T
Locking Circuit Board Guide

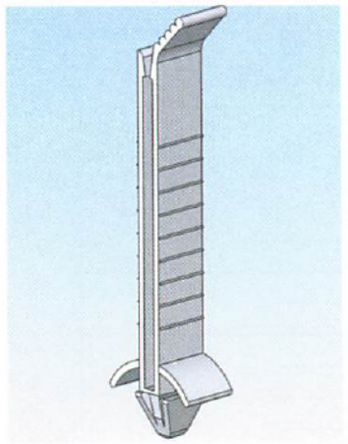

Accepts PCB: .062 (1.6)

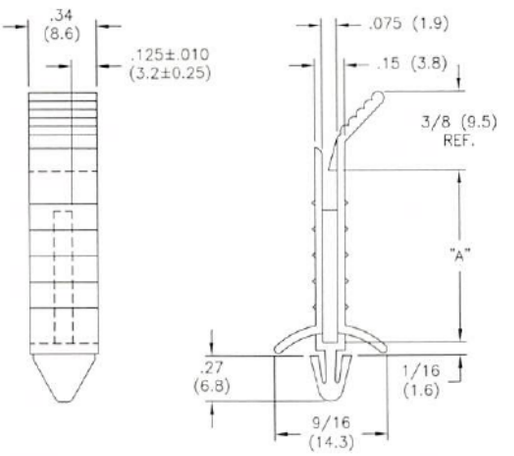

Mounts Into Hole: Snap-lock into rectangular hole .175±.003 (4.45±0.08) X .310±.003 (7.87±0.08)
Mounts Into Panel: .030 - .070 (0.76 - 1.78)

Standard Pack: 100 per bag	
Mat'l: Nylon 6/6, RMS-01* Color: Natural	"A" ± .010 (0.25)
LCBG-1T-01	.880 (22.4)
LCBG-1.5T-01	1.375 (34.9)
LCBG-2T-01	1.870 (47.5)
LCBG-3T-01	2.875 (73)

*Available in UL94 V0 material by special order. To order, replace -01 with -19.

Features
- PCB is easily removed by pulling on the release tab

-800-621-1892
Get quote
Angic Global Solutions 1-888-872-0690
https://www.AngicGlobal.com Sales@AngicGlobal.com

VMCGE-30M-01
Vertical Mount Guide

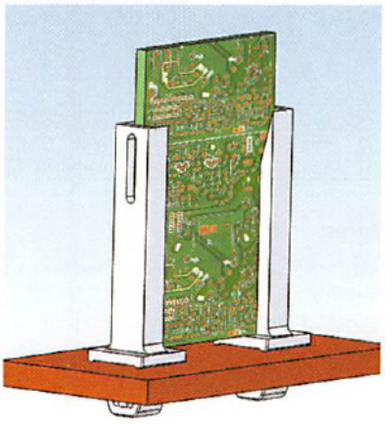

Accepts PCB: .062 (1.6)

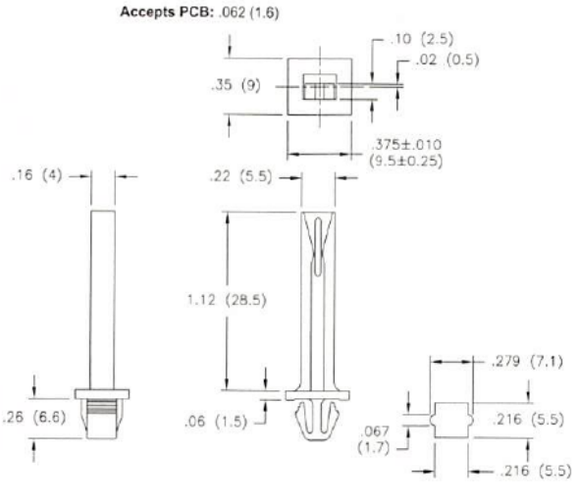

Mounts Into Hole: Snap-lock into above dimensions ±.003 (0.08)
Mounts Into Panel: .047 - .071 (1.2 - 1.8)

Standard Pack: 1,000 per bag
Mat'l: Nylon 6/6, RMS-01* Color: Natural
*Available in UL94 V0 material by special order. To order, replace -01 with -19.

Features

- Square mounting hole has anti-rotation benefits

VMCGLE-31M-01
Vertical Mount Guide Latched

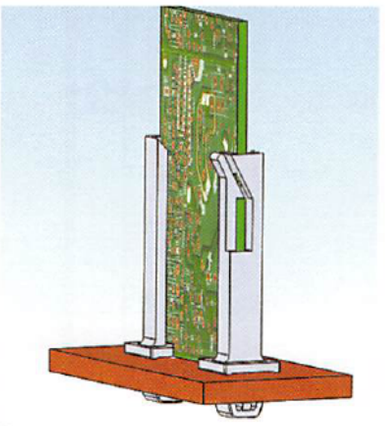

Accepts PCB: .062 (1.6)

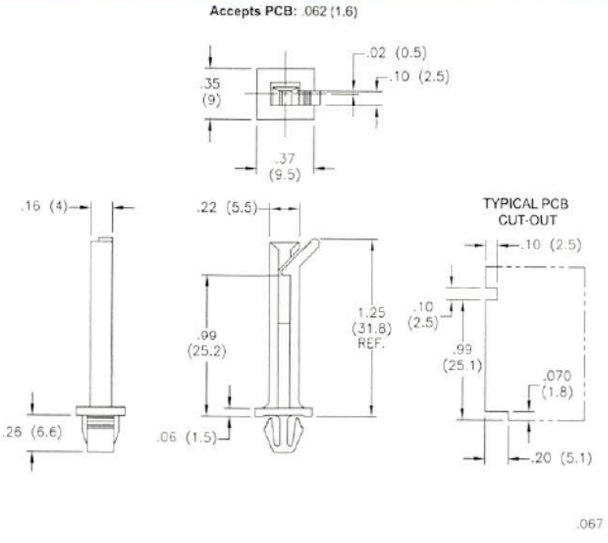

Mounts Into Hole: Snap-lock into dimensions above, ±.003 (0.08)
Mounts Into Panel: .047 - .071 (1.2 - 1.8)

Standard Pack: 1,000 per bag
Mat'l: Nylon 6/6, RMS-01* Color: Natural
*Available in UL94 V0 material by special order. To order, replace -01 with -19.

Features

- PCB is easily removed by pulling on the release tab

PCB-MB-01
Printed Circuit Board Mounting Block

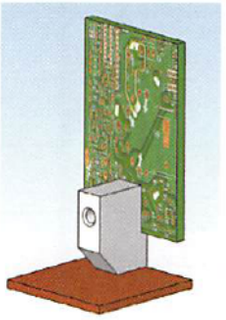

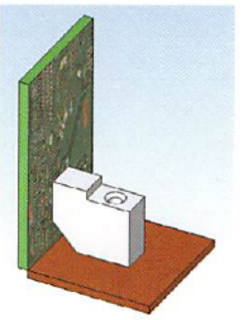

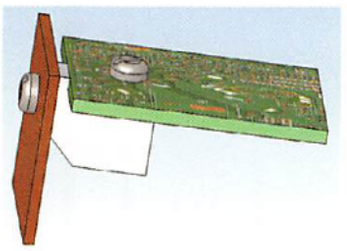

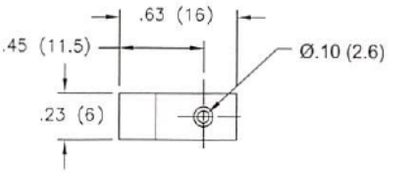

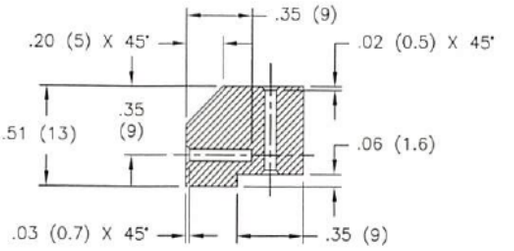

Mounting Holes: To accept a metal #4 self-tapping screw type B

Standard Pack: 1,000 per bag
Mat'l: Nylon 6/6, RMS-01* Color: Natural
*Available in UL94 V0 material by special order. To order, replace -01 with -19.

Features

- Mounts PC boards to chassis or other PC boards
- Different mounting configurations are possible to fit specific application needs

539-4060 Sam
Get quote
Angic Global Solutions 1-888-872-0690
https://www.AngicGlobal.com Sales@AngicGlobal.com

B

TCGVM & TCG
Tension Card Guide
Vertical Mount &
Tension Card Guide

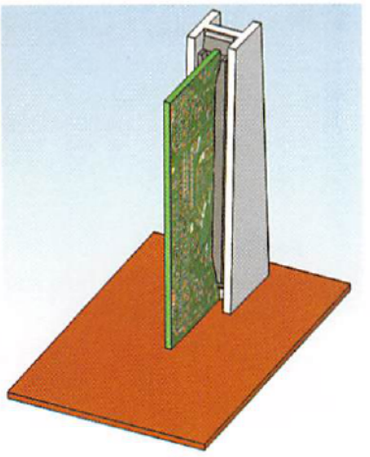

TCGVM

Accepts TCG Series Card Guide

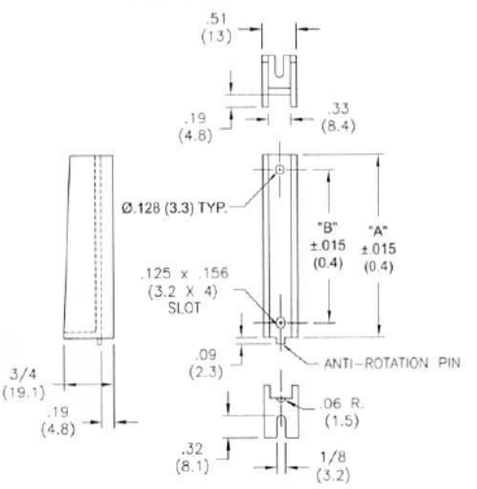

Mounts Into Hole: To accept #4 or #5 screw or rivet

TCGVM		Standard Pack: 100 per bag	
Mat'l: UL94 VO Polycarbonate RMS-23 Color: Black	"A"	"B"	Used with
TCGVM1-2.500-23	2.62 (66.6)	2.20 (55.9)	TCG1-2.500-23
TCGVM1-3.300-23	3.42 (86.9)	3.00 (76.2)	TCG1-3.300-23
TCGVM1-3.925-23	4.05 (102.9)	3.63 (92.29)	TCG1-3.925-23
TCGVM1-6.675-23	6.80 (172.7)	6.38 (162)	TCG1-6.675-23

Features
- Works with TCG to mount boards vertically
- Snap TCG into TCGVM and install assembled unit with a #4 or #5 screw

TCG

Accepts PCB: .062 (1.6)

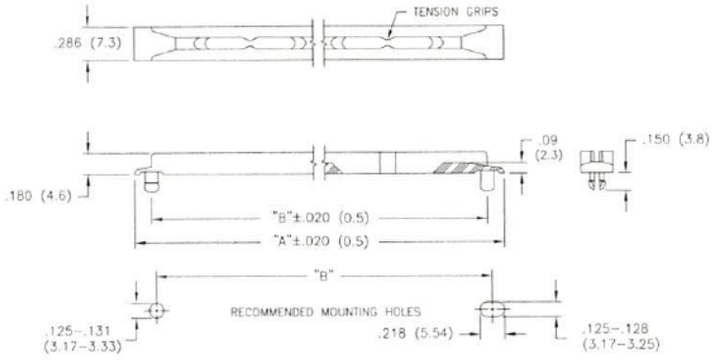

Mounts Into Hole: Snap-lock into dimensions above
Mounts Into Panel: .062 (1.6)

TCG		Standard Pack: 500 per bag	
Mat'l: UL94 VO Polycarbonate RMS-23 Color: Black	Nominal "A"	Nominal "B"	Number of Grips
TCG1-2.500-23	2.500 (63.5)	2.200 (55.9)	1
TCG1-3.300-23	3.300 (83.8)	3.000 (76.2)	2
TCG1-3.925-23	3.925 (99.7)	3.625 (92.1)	2
TCG1-6.675-23	6.675 (169.5)	6.375 (161.9)	4

Features
- Tension grips apply spring pressure to hold boards firmly
- Funnel entry for easy board insertion

Notes

-800-621-1892
Get quote
Angic Global Solutions 1-888-872-0690
https://www.AngicGlobal.com Sales@AngicGlobal.com

PCG
Printed Circuit Guide

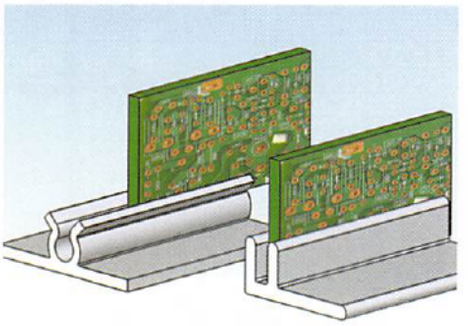

Accepts PCB: .062 (1.6)

PCG-3

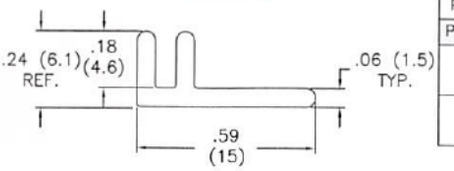

PCG-4

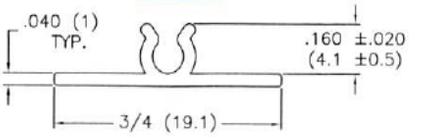

Part No.	Material	Adhesive
PCG-3-48	ABS, RMS-09 Color: Gray	N/A
PCG-3A-48	ABS, RMS-09 Color: Gray	Acrylic, RMS-15
PCG-4-48	PVC, RMS-04 Color: Gray	N/A
PCG-4A-48	PVC, RMS-04 Color: Gray	Acrylic, RMS-15
Standard Pack: 100 feet: 25 pieces x 48", (25 pieces x 1,219.2mm) lengths		
Custom cut lengths and/or drilling is available by special order.		

Features
- Extruded design allows for parts to be easily supplied in custom lengths

BMS
Board Mounting Strip

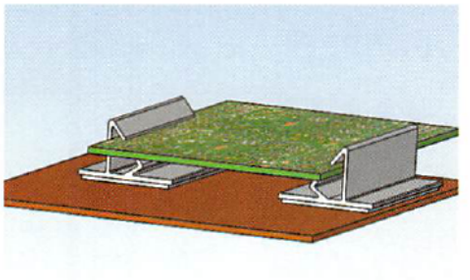

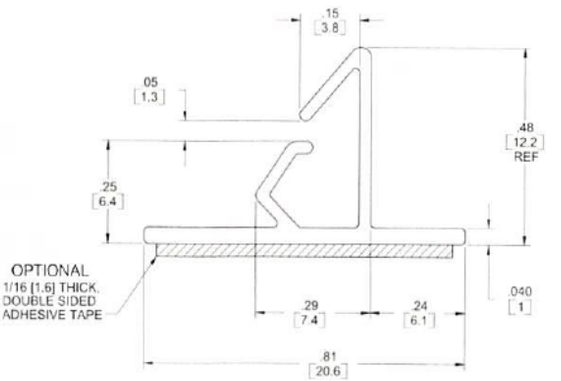

Features
- Mounts boards of any length or width

Part No.	Material	Adhesive
BMS-S-48	PVC, RMS-04 Color: Black	N/A
BMS-SA-48	PVC, RMS-04 Color: Black	Acrylic, RMS-15
Standard Pack: 100 feet: 25 pieces x 48", (25 pieces x 1,219.2mm) lengths		
Custom cut lengths are available by special order.		

RSSHG
Single Sided Horizontal Card Guide

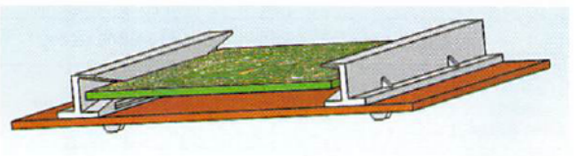

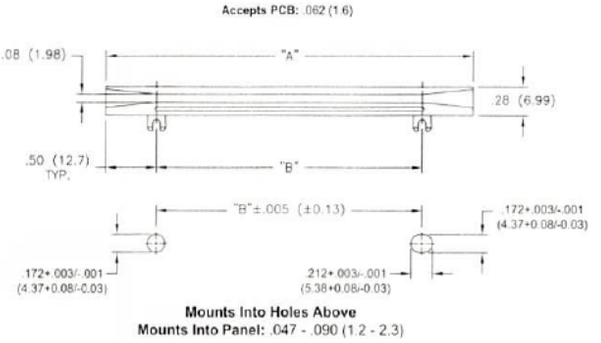

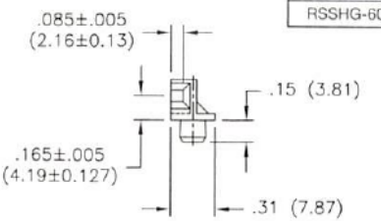

RSSHG		Standard Pack: 500 per bag
Mat'l: UL94 VO Nylon 6/6, RMS-66 Color: Black	"A" ± .016 (0.4)	"B" ± .016 (0.4)
RSSHG-201-165	2.0 (50.8)	1.0 (25.4)
RSSHG-251-165	2.5 (63.5)	1.5 (38.1)
RSSHG-301-165	3.0 (76.2)	2.0 (50.8)
RSSHG-351-165	3.5 (88.9)	2.5 (63.5)
RSSHG-401-165	4.0 (101.6)	3.0 (76.2)
RSSHG-451-165	4.5 (114.3)	3.5 (88.9)
RSSHG-501-165	5.0 (127)	4.0 (101.6)
RSSHG-551-165	5.5 (139.7)	4.5 (114.3)
RSSHG-601-165	6.0 (152.4)	5.0 (127)

39-4060 Samp
Get quote
Angic Global Solutions 1-888-872-0690
https://www.AngicGlobal.com Sales@AngicGlobal.com

B

RDC
Deep Channel Card Guide

Accepts PCB: See Table

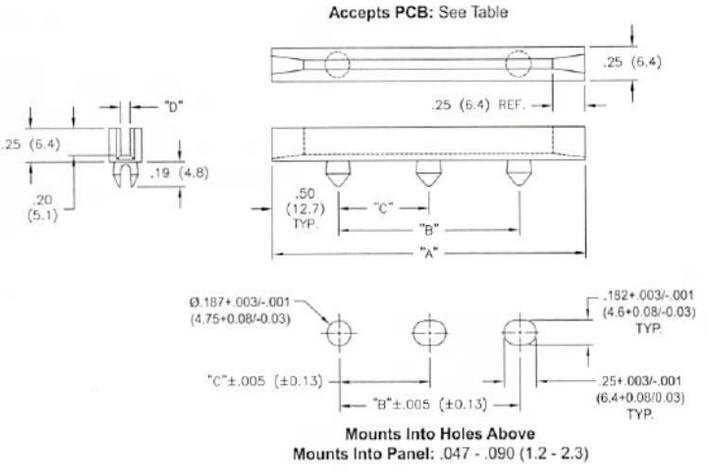

Mounts Into Holes Above
Mounts Into Panel: .047 - .090 (1.2 - 2.3)

RDC				Standard Pack: 500 per bag	
Mat'l: UL94 V0 Nylon 6/6, RMS-66 Color: Black	"A" Ref.	"B" ± .025 (0.63)	"C" ± .015 (0.38)	Nominal Board Thickness	"D" ± .005 (0.13)
RDC-250	2.5 (63.5)	1.50 (38.1)	-	1/16 (1.6)	.080 (2)
RDC-450	4.5 (114.3)	3.50 (88.9)	-		
RDC-600	6.0 (152.4)	5.00 (127)	-		
RDC-800	8.0 (203.2)	7.00 (177.8)	3.50 (88.9)		
RDC-450-102	4.5 (114.3)	3.50 (88.9)	-	3/32 (2.4)	.102 (2.6)
RDC-600-102	6.0 (152.4)	5.00 (127)	-		
RDC-800-102	8.0 (203.2)	7.00 (177.8)	3.50 (88.9)		
RDC-450-130	4.5 (114.3)	3.50 (88.9)	-	1/8 (3.2)	.132 (3.4)
RDC-600-130	6.0 (152.4)	5.00 (127)	-		
RDC-800-130	8.0 (203.2)	7.00 (177.8)	3.50 (88.9)		

Features

- Allows for maximum board retention for high vibration, shock applications and wide boards
- Funnel entry for easy board insertion
- Slotting or elongating of 2nd and 3rd mounting hole is recommended to allow for length variations in molding and assembly ease

RSFS
Snap-In Card Guide

Accepts PCB: .062 (1.6)

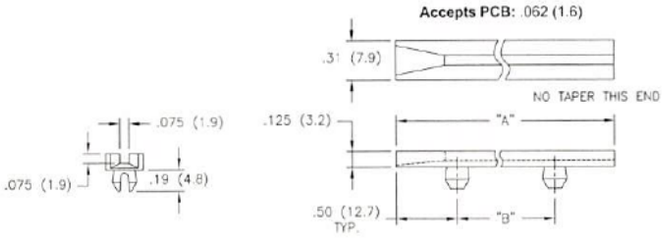

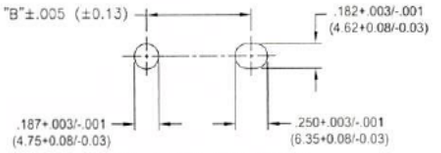

Mounts Into Holes Above
Mounts Into Panel: .047 - .090 (1.2 - 2.3)

RSFS			Standard Pack: 500 per bag		
Mat'l: Nylon 6/6, RMS-48 Color: Natural	"A" Ref.	"B" ± .025 (0.63)	"C"	"D"	"E"
RSFS-250	2.5 (63.5)	1.5 (38.1)	.125 (3.2)	.075 (1.9)	.19 (4.8)
RSFS-300	3.0 (76.2)	2.0 (50.8)			
RSFS-350	3.5 (88.9)	2.5 (63.5)			
RSFS-400	4.0 (101.6)	3.0 (76.2)			
RSFS-450	4.5 (114.3)	3.0 (76.2)			
RSFS-451	4.5 (114.3)	3.5 (88.9)			
RSFS-500	5.0 (127)	4.0 (101.6)			
RSFS-550	5.5 (139.7)	4.5 (114.3)			
RSFS-600	6.0 (152.4)	5.0 (127)			
RSFS-650	6.5 (164.1)	5.02 (127.5)			
RSFS-651	6.5 (164.1)	5.5 (139.7)			
RSFS-700	7.0 (177.8)	6.0 (152.4)			
RSFS-750	7.5 (190.5)	6.5 (165.1)			
RSFS-800	8.0 (203.2)	7.0 (177.8)			

Features

- Funnel entry for easy board insertion
- Interchangeable card guides for 1/16"(1.6mm) printed circuit boards

RSDC
Snap-In Card Guide

Accepts PCB: .062 (1.6)

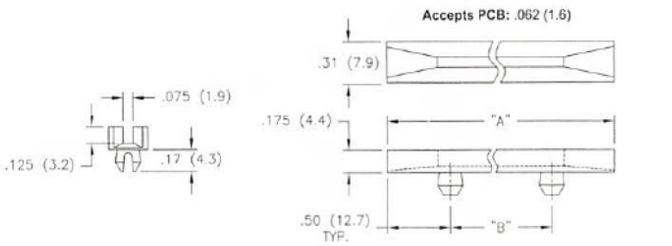

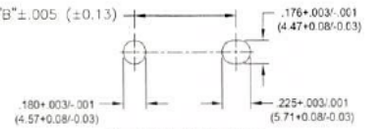

Mounts Into Holes Above
Mounts Into Panel: .047 - .090 (1.2 - 2.3)

RSDC			Standard Pack: 500 per bag		
Mat'l: Nylon 6/6, RMS-48 Color: Natural	"A" Ref.	"B" ± .016 (0.41)	"C"	"D"	"E"
RSDC-250	2.5 (63.5)	1.5 (38.1)	.175 (4.4)	.125 (3.2)	.17 (4.3)
RSDC-300	3.0 (76.2)	2.0 (50.8)			
RSDC-350	3.5 (88.9)	2.5 (63.5)			
RSDC-400	4.0 (101.6)	3.0 (76.2)			
RSDC-450	4.5 (114.3)	3.5 (88.9)			
RSDC-500	5.0 (127)	4.0 (101.6)			
RSDC-550	5.5 (139.7)	4.5 (114.3)			
RSDC-600	6.0 (152.4)	5.0 (127)			
RSDC-650	6.5 (164.1)	5.5 (139.7)			
RSDC-700	7.0 (177.8)	6.0 (152.4)			
RSDC-750	7.5 (190.5)	6.5 (165.1)			
RSDC-800	8.0 (203.2)	7.0 (177.8)			

-800-621-1892
ANGIC
Get quote
Angic Global Solutions 1-888-872-0690
https://www.AngicGlobal.com Sales@AngicGlobal.com

RCGH
Rack Card Guide Type H

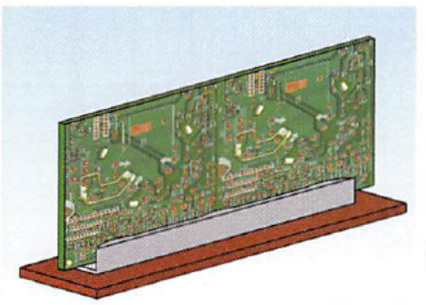

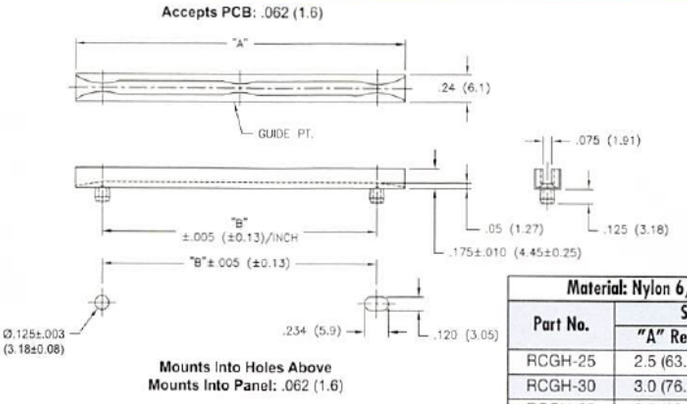

Material: Nylon 6/6, RMS-01* • Color: Natural			
Part No.	Standard Pack: 500 per bag		
	"A" Ref.	"B"	Guide PT.
RCGH-25	2.5 (63.5)	2.0 (50.8)	2
RCGH-30	3.0 (76.2)	2.5 (63.5)	3
RCGH-35	3.5 (88.9)	3.0 (76.2)	3
RCGH-40	4.0 (101.6)	3.5 (88.9)	3
RCGH-45	4.5 (114.3)	4.0 (101.6)	4
RCGH-50	5.0 (127)	4.5 (114.3)	4
RCGH-55	5.5 (139.7)	5.0 (127)	5
RCGH-60	6.0 (152.4)	5.5 (139.7)	5
*Available in UL94 VO material by special order.			

Features
- For quick installation, insert rear pin into slot and snap front pin into hole
- Hollow pin design eases insertion

RCG
Rack Card Guide

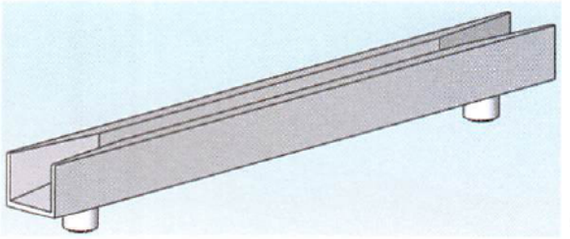

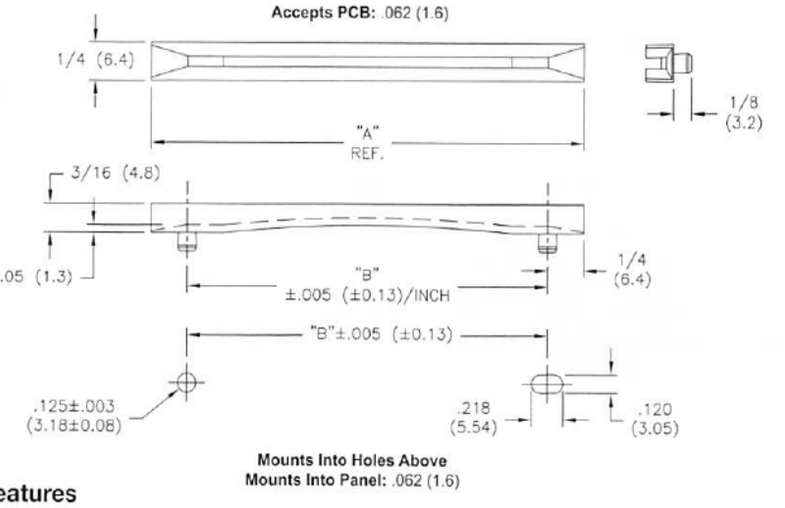

Material: Nylon 6/6, RMS-01* Color: Natural		
Part No.	Standard Pack: 500 per bag	
	"A"	"B"
RCG-1	3.0 (76.2)	2.5 (63.5)
RCG-2	4.0 (101.6)	3.5 (88.9)
RCG-3	6.0 (152.4)	5.5 (139.7)
RCG-4	8.5 (215.9)	8.0 (203.2)
*Available in UL94 VO material by special order.		

Features
- Funnel entry for easy board insertion

TRCG
Tension Rack Card Guide

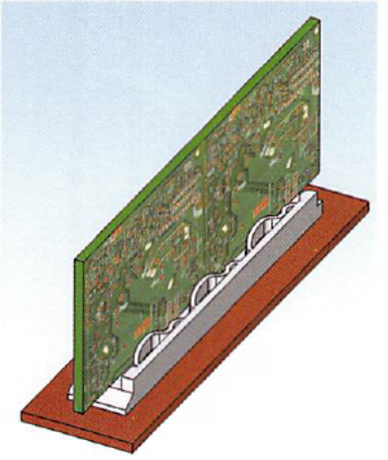

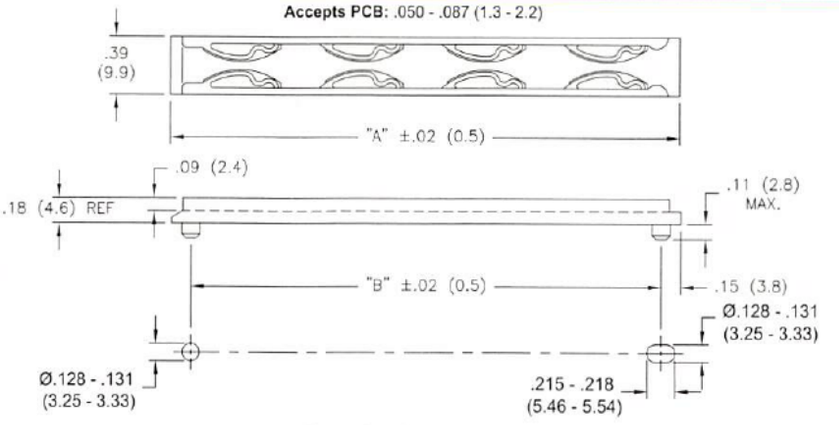

Material: UL94 VO Polycarbonate, RMS-23 • Color: Black		
Part No.	Standard Pack: 500 per bag	
	"A"	"B"
TRCG-2.500	2.50 (63.5)	2.2 (55.9)
TRCG-3.300	3.30 (83.8)	3.0 (76.2)
TRCG-3.925	3.93 (99.7)	3 - 5/8 (92.1)
TRCG-6.675	6.68 (169.6)	6 - 3/8 (161.9)

Features
- Tension grips apply spring pressure to hold boards firmly

ANGIC
Get quote
Angic Global Solutions 1-888-872-0690
https://www.AngicGlobal.com Sales@AngicGlobal.com

B

RN
Narrow Card Guide

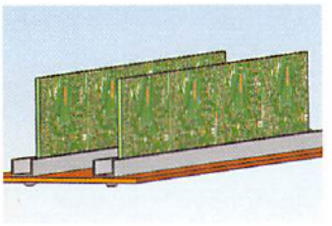

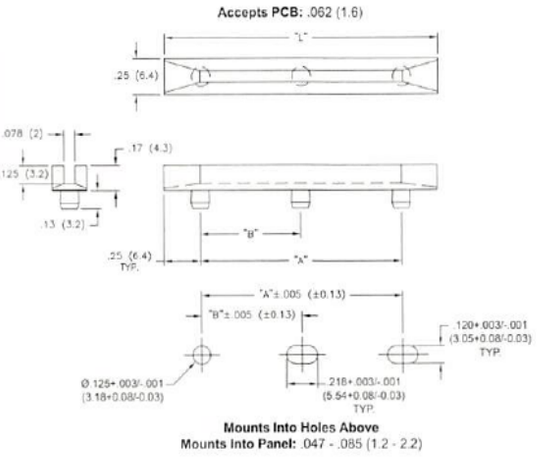

Mounts Into Holes Above
Mounts Into Panel: .047 - .085 (1.2 - 2.2)

Features
- Design allows for use in high density applications

RN		Standard Pack: 500 per bag	
Mat'l: Nylon 6/6, RMS-48* Color: Natural	"L" ± .03 (0.8)	"A" ± .024 (0.6)	"B" ± .016 (0.4)
RN-250-2	2.5 (63.5)	2.0 (50.8)	-
RN-300-2	3.0 (76.2)	2.5 (63.5)	-
RN-350-2	3.5 (88.9)	3.0 (76.2)	-
RN-400-2	4.0 (101.6)	3.5 (88.9)	-
RN-450-2	4.5 (114.3)	4.0 (101.6)	-
RN-500-2	5.0 (127)	4.5 (114.3)	-
RN-550-2	5.5 (139.7)	5.0 (127)	-
RN-600-2	6.0 (152.4)	5.5 (139.7)	-
RN-650-2	6.5 (164.1)	6.0 (152.4)	-
RN-700-3	7.0 (177.8)	6.5 (164.1)	3.25 (82.2)
RN-750-3	7.5 (190.5)	7.0 (177.8)	3.5 (88.5)
RN-800-3	8.0 (203.2)	7.5 (190.5)	3.75 (94.9)
RN-850-3	8.5 (215.5)	8.0 (203.2)	4.0 (101.6)
*Available in UL94 V0 material by special order only.			

ACGC/ACGE
Adjustable Card Guide

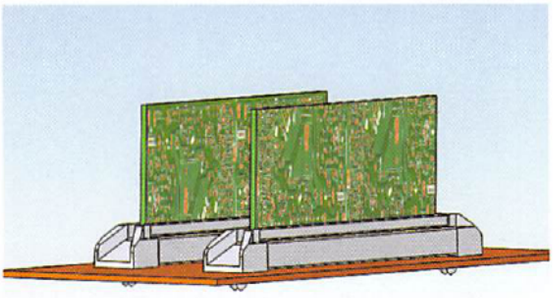

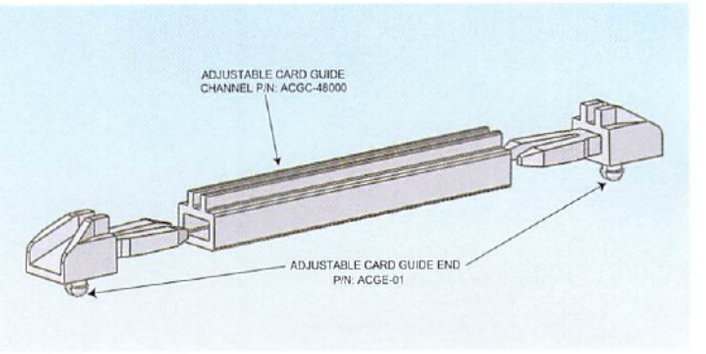

Features
- Adjustable design: Insert ACGE-01 end pieces into ACGC channel and snap into chassis hole
- Channel can be cut to any length, providing infinite sizes

ACGC
Accepts PCB: .062 (1.6)

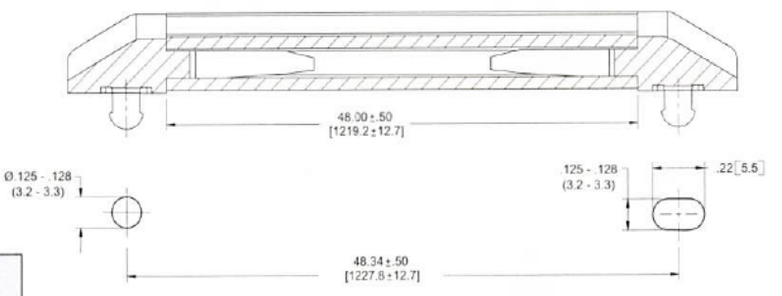

Part No.	Description	Material	Standard Pack
ACGE-01	End pieces	Nylon 6/6, RMS-01 Color: Natural	100 per bag
ACGC-48000	Channel	PVC, RMS-04 Color: Natural	100 feet: 25 pieces x 48" (25 pieces x 1,219.2mm)

ACGE
Mounts Into Holes Above
Mounts Into Panel: .062 (1.6)

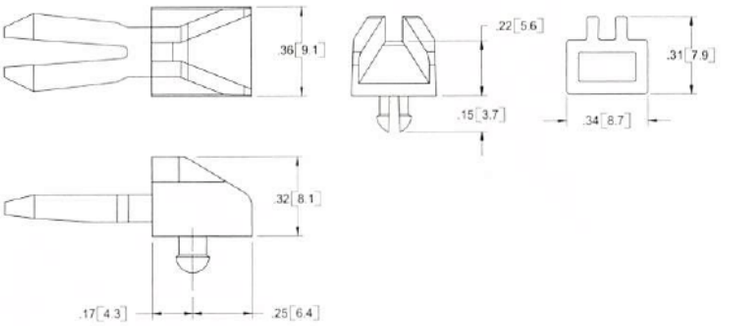

ANGIC
Get quote
-800-621-1892
Angic Global Solutions 1-888-872-0690
https://www.AngicGlobal.com Sales@AngicGlobal.com

CCP
Circuit Board Puller

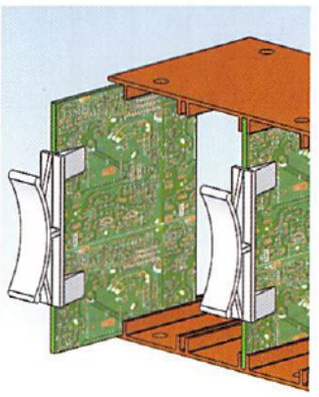

Mounts Into PCB: Snap-fit onto .062 (1.6)

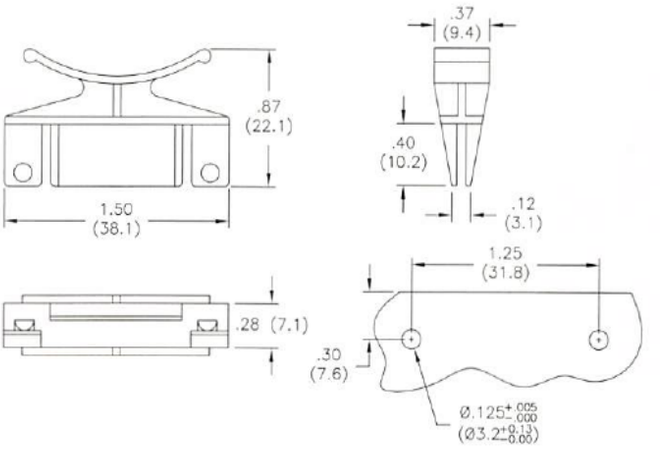

Mounts Into Holes Above

Standard Pack: 500 per bag
Mat'l: Nylon 6/6, RMS-01* Color: Natural
*Available in UL94 V0 material by special order. To order, replace -01 with -19.

Features
- Curved tab provides fingertip grip for board insertion and removal

RCP
Card Ejector

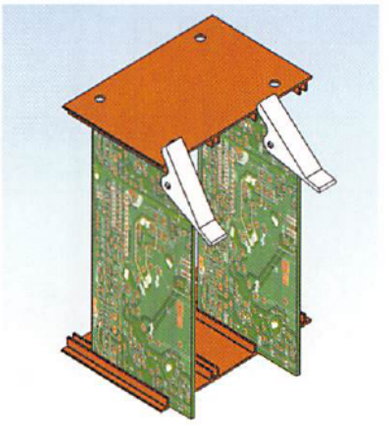

All RCP Series Parts Mount Into Hole Below See Table for Panel Thicknesses Accepted

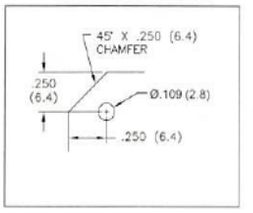

Fig. 1

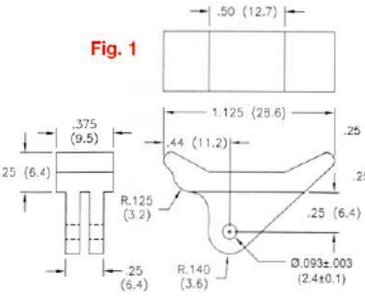

Fig. 2

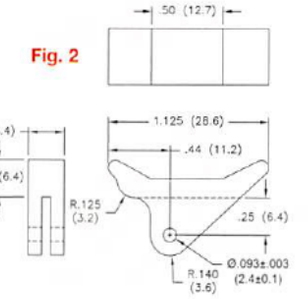

Fig. 3

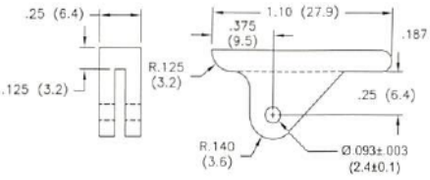

Fig. 4

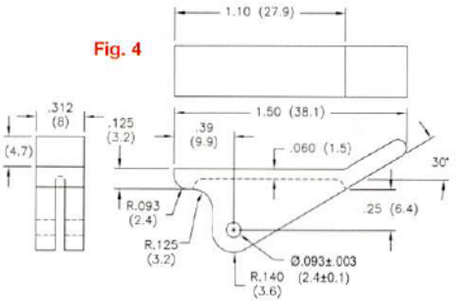

Fig. 5

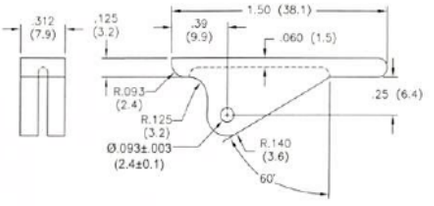

Fig. 6

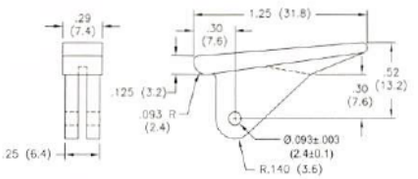

Fig. 7

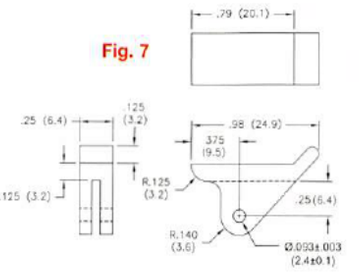

Features
- Leverage against guide rack or chassis ejects the board
- Unique design gives superior gripping action
- Round roll pins (RRP) supplied with each ejector

RCP		Standard Pack: 500 per bag	
Mat'l: Nylon 6/6, RMS-48 Color: White	Card Thickness	Fig.	Roll Pin (RRP) Supplied
RCP-06	.062 (1.6)	1	RRP-250
RCP-09	.093 (2.4)	1	
RCP-26	.062 (1.6)	2	
RCP-36	.062 (1.6)	3	
RCP-46	.062 (1.6)	4	
RCP-56	.062 (1.6)	5	
RCP-66	.062 (1.6)	6	
RCP-86	.062 (1.6)	7	RRP-312
RCP-89	.093 (2.4)	7	

39-4060 Samp
Get quote
Angic Global Solutions 1-888-872-0690
https://www.AngicGlobal.com Sales@AngicGlobal.com

B

R1001/R1002/R1003
Inserter/Extractor

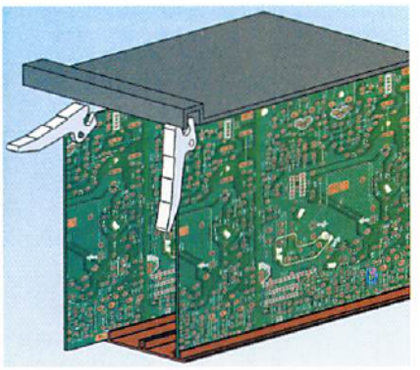

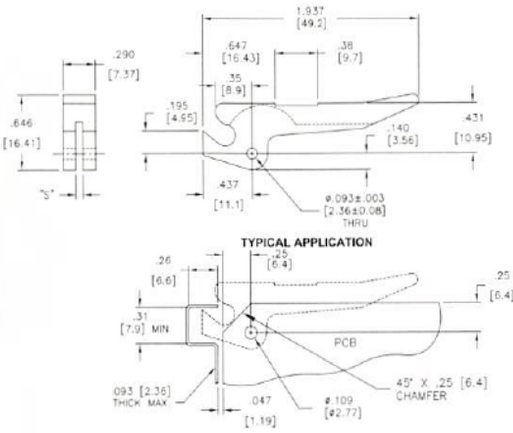

Material: Nylon 6/6, RMS-48 • Color: Natural		
Part No.	Standard Pack: 100 per bag	
	"S"	PCB Thickness
R1001-062	.075 (1.9)	.062 (1.6)
R1002-093	.100 (2.5)	.093 (2.4)
R1003-125	.140 (3.6)	.125 (3.2)
Roll Pin (RRP) Supplied: RRP-250		

Features

- All inserters/extractors this page supplied with Round Roll Pins (RRP)

R1107
Inserter/Extractor

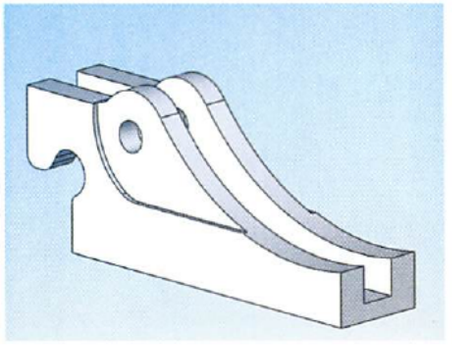

Material: Glass Filled Nylon 11, RMS-222 Color: Natural							
Part No.	Standard Pack: 100 per bag						Roll Pin (RRP) Supplied
	"S"	"W"	"L1"	"L2"	PCB Thickness	Fig.	
R1107-062	.075 (1.9)	.29 (7.4)	2.0 (50.8)	-	.062 (1.6)	1	RRP-250
R11073-062	.075 (1.9)	.35 (8.9)					RRP-312
R11073-093	.100 (2.5)				.093 (2.4)		
R110710-062	.075 (1.9)	.29 (7.4)	-	1.5 (38.1)	.062 (1.6)	2	RRP-250
R1107310-062	.075 (1.9)	.35 (8.9)					RRP-312
R1107310-093	.100 (2.5)				.093 (2.4)		

Fig. 1

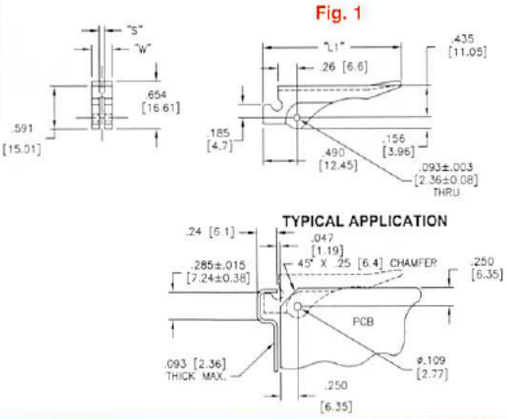

Fig. 2

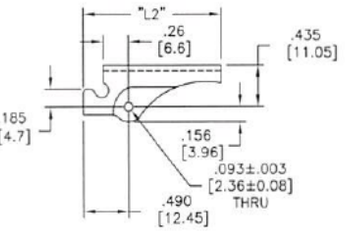

R1209
Inserter/Extractor

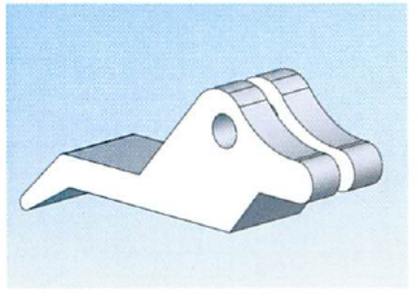

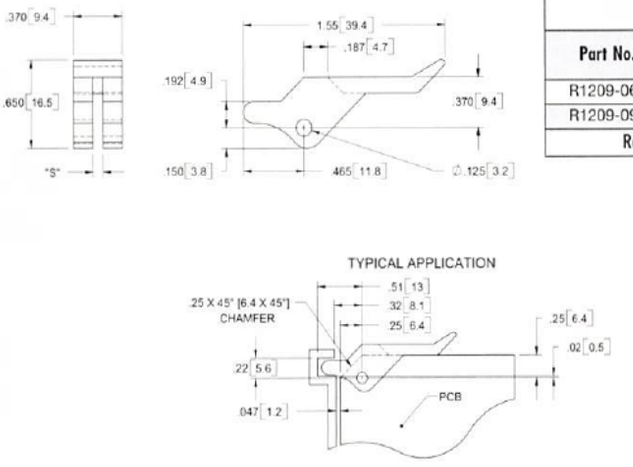

Material: Nylon 6/6, RMS-48 Color: Natural		
Part No.	Standard Pack: 100 per bag	
	"S"	PCB Thckns.
R1209-062	.075 (1.9)	.062 (1.6)
R1209-093	.100 (2.5)	.093 (2.4)
Roll Pin (RRP) Supplied: RRP-375		

1-800-621-189
Get quote
Angic Global Solutions 1-888-872-0690
https://www.AngicGlobal.com Sales@AngicGlobal.com

CBE
Circuit Board Ejector

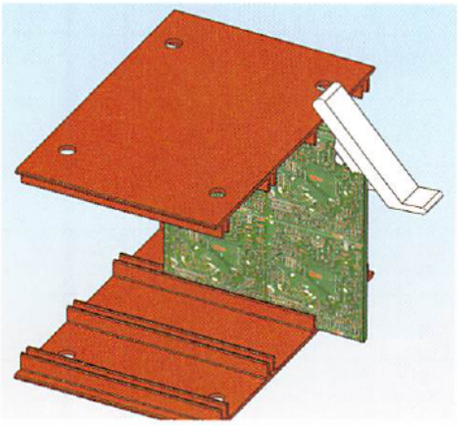

Fig. 1

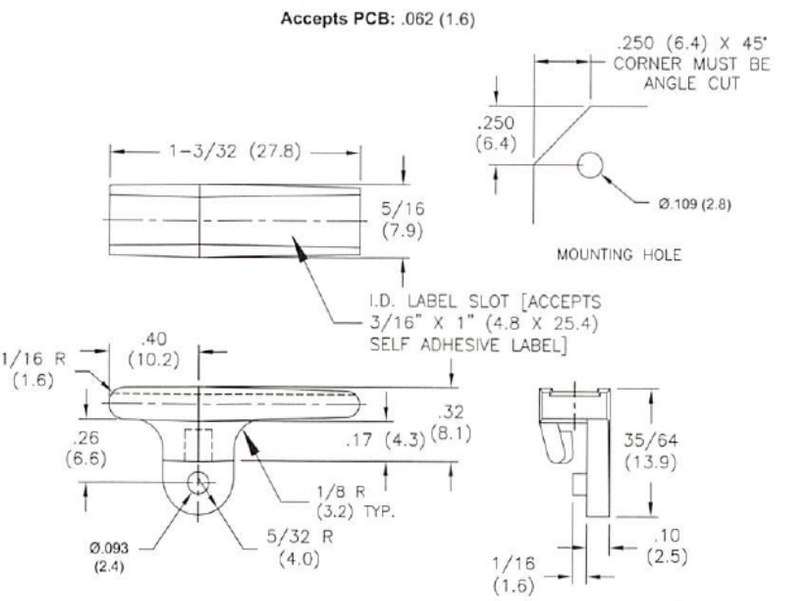

Fig. 2

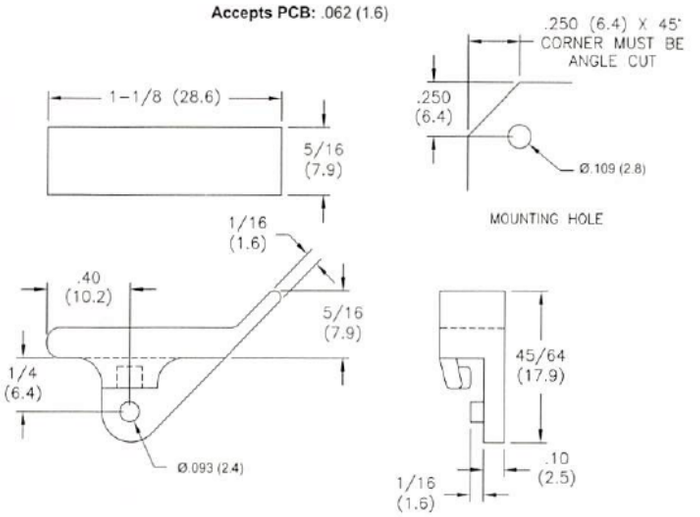

CBE		Standard Pack: 1,000 per bag
Mat'l: Nylon 6/6, RMS-01*	Color	Fig.
CBE-1	Natural	1
CBE-8		2
CBE-9	Green	
CBE-11	Black	
*Available in UL94 VO material by special order. To order, add -19 to the end of the part number.		

Features
- Leverage against guide rack or chassis ejects the board

RRP
Round Roll Pins

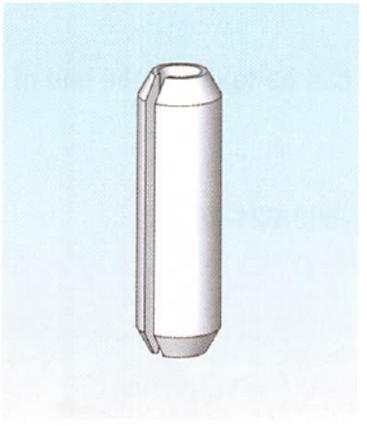

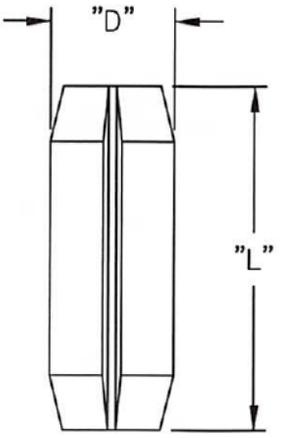

RRP		Standard Pack: 100 per bag
Mat'l: Passivated Stainless Steel per MIL-P-10971, RMS-224, Color: Silver	"D"	"L"
RRP-250	.093 (2.4)	.250 (6.4)
RRP-312	.093 (2.4)	.312 (7.9)
RRP-375	.125 (3.2)	.375 (9.5)

Roll Pins for use with the following card ejectors, inserters/extractors:		
RRP-250	RRP-312	RRP-375
RCP-06	RCP-46	R1209-062
RCP-09	RCP-56	R1209-093
RCP-26	R11073-063	
RCP-36	R11073-093	
RCP-66	R1107310-062	
RCP-86	R1107310-093	
RCP-89		
R1001-062		
R1002-093		
R1003-125		
R1007-062		
R110710-062		

Features
- Used with Richco Inserters and Extractors

39-4060 Samp
Get quote
Angic Global Solutions 1-888-872-0690
https://www.AngicGlobal.com Sales@AngicGlobal.com

Notes

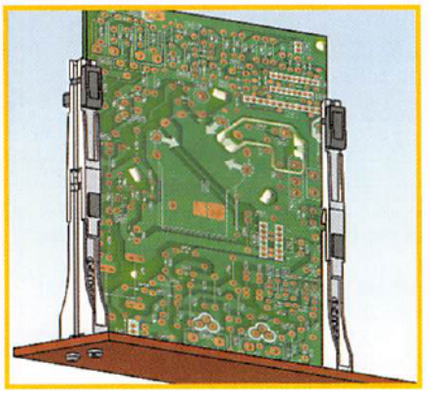

- Up-to-the minute product updates can be seen on our corporate web page at www.richco-inc.com
- Raw Material Specifications (RMS) can be found at the end of the catalog – pages 227-234
- Want to try a sample? Please call 1-800-621-1892

-800-621-1892
ANGIC
Get quote
Angic Global Solutions 1-888-872-0690
https://www.AngicGlobal.com Sales@AngicGlobal.com

General Features

Richco provides an array of rivets, screws, washers and nuts to help secure and fasten components and/or panels to a wide variety of materials such as wood, metal, particle board, plastic and rubber surfaces. Our rivets are available in many styles: blind hole, drive fasteners, snap lock pins, snap rivets and push rivets which can be removed, unscrewed and pushed/pulled depending upon the rivet type. Our range of plastic screws, washers and nuts conform to relevant DIN standards, are available in different drive formats, thread and hole sizes. Products in this section are offered in a wide range of materials, including standard Nylon 6/6, Nylon 6, V0 rated Nylon, Polyethylene, Acetal and Polysulfone for high temperature applications.

Typical Applications

- Point of purchase display industry
- Brown Goods/Consumer Electronics – Audio and video equipment
- Automotive industry - GPS, audio equipment, safety devices
- White Goods - Washing machines and ovens
- Telecom and Datacom - Patch panels and distribution racks.

Custom Options

Materials

Most of Richco's rivets, screws, washers and nuts come in the following materials.

Material	Flammability Rating	RoHS Compliance	RMS
Nylon 6/6	V2	Yes	01
Nylon 6	V2	Yes	52
Flame Retardant Nylon	V0	Yes	103
Nylon 4/6 Heat Stabilized	V2	Yes	56

For more details on material properties please consult the materials data section (RMS) of the catalog. Should you require a part to be manufactured in a different material which is not shown in the catalog please contact your local Richco office to discuss your requirements.

Color

Standard colors include black, white, tan and natural. Other colors are available by special order. Please contact your local Richco office for quotation. A minimum order quantity (MOQ) may apply.

Special Packaging

Most Richco parts come in standard packs of 1,000 pieces per bag. If you require products to be packed in different quantities, please contact your local Richco office and this can be discussed as a special order. An MOQ may apply.

Introduction

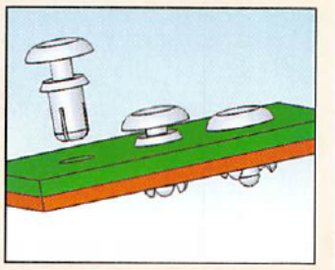

Snap Rivets

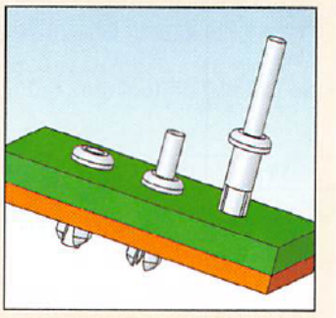

Push Rivets

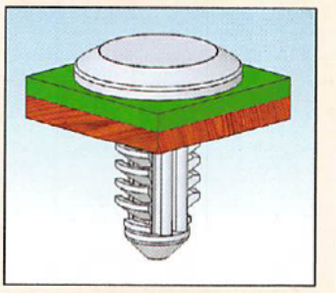

Barbed Push Fasteners

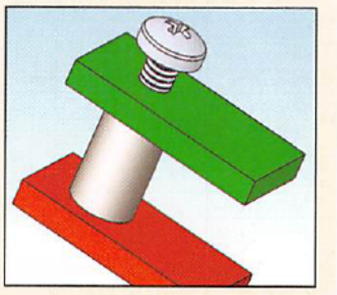

Slotted and Phillips Pan Head Screws

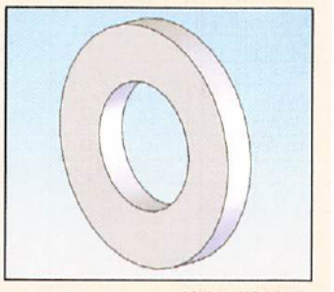

Nylon Washers

539-4060 Sam
Get quote
Angic Global Solutions 1-888-872-0690
https://www.AngicGlobal.com Sales@AngicGlobal.com

SR/SRVO
Snap Rivets

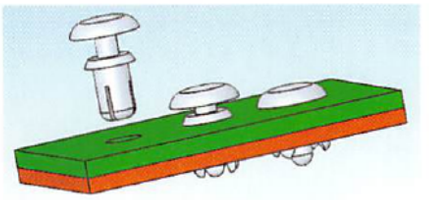

C

Features

- To install, simply press the head of the two-piece rivet. This causes the legs to expand locking it in place.
- No installation tool required.

Fig. 1

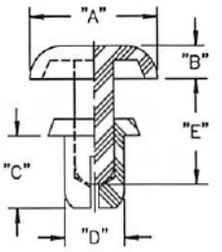



Fig. 2

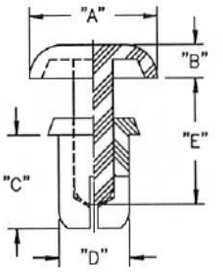

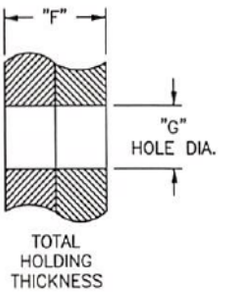

SR	SRVO	Standard Pack: 1,000 per bag								
Mat'l: Nylon 6, RMS-52 Color: Black or White*	Mat'l: Flame Ret. Nyl. 66/6, RMS-103 Color: Black	Hole Dia. "G"	Extraction Force lb. (kg) Typ.	Total Holding Thickness "F"	"A" ± .008	"B" ± .008	"C" ± .012	"D"	"E" ± .012	Fig. No.
SR-2024	SRVO-2024	.083 - .087 (2.1 - 2.2)	6.6 (3)	.024 - .047 (0.6 - 1.2)	.165 (4.2)	.047 (1.2)	.09 (2.4)	.079 (2)	.11 (2.8)	
SR-2032	SRVO-2032			.051 - .079 (1.3 - 2)			.13 (3.2)		.15 (3.8)	
SR-2040	SRVO-2040			.083 - .110 (2.1 - 2.8)			.16 (4)		.22 (5.5)	
SR-2048	SRVO-2048			.114 - .142 (2.9 - 3.6)			.19 (4.8)		.22 (5.5)	
SR-2056	SRVO-2056			.146 - .173 (3.7 - 4.4)			.22 (5.6)		.28 (7.2)	
SR-2064	SRVO-2064			.173 - .197 (4.4 - 5)			.25 (6.4)		.28 (7.1)	
SR-2632	SRVO-2632	.106 - .110 (2.7 - 2.8)	11.0 (5)	.039 - .079 (1 - 2)	.197 (5)	.055 (1.4)	.13 (3.2)	.102 (2.6)	.18 (4.5)	1
SR-2642	SRVO-2642			.079 - .118 (2 - 3)			.17 (4.2)		.18 (4.5)	
SR-2648	SRVO-2648			.106 - .142 (2.7 - 3.6)			.19 (4.8)		.24 (6.1)	
SR-2655	SRVO-2655			.134 - .169 (3.4 - 4.3)			.22 (5.6)		.24 (6.1)	
SR-2664	SRVO-2664			.169 - .205 (4.3 - 5.2)			.25 (6.4)		.31 (7.8)	
SR-2672	SRVO-2672			.201- .236 (5.1 - 6)			.28 (7.2)		.31 (7.8)	
SR-3035	SRVO-3035	.122 - .126 (3.1 - 3.2)	17.6 (8)	.039 - .079 (1 - 2)	.252 (6.4)	.063 (1.6)	.14 (3.5)	.118 (3)	.20 (5.1)	
SR-3045	SRVO-3045			.079 - .118 (2 - 3)			.18 (4.5)		.24 (6.1)	
SR-3055	SRVO-3055			.118 - .157 (3 - 4)			.22 (5.6)		.24 (6.1)	
SR-3065	SRVO-3065			.157 - .197 (4 - 5)			.26 (6.5)		.28 (7.1)	
SR-3075	SRVO-3075			.197 - .236 (5 - 6)			.30 (7.5)		.35 (9)	
SR-3080	SRVO-3080			.217 - .256 (5.5 - 6.5)			.32 (8)		.35 (9)	
SR-3090	SRVO-3090			.256 - .295 (6.5 - 7.5)			.35 (9)		.43 (11)	
SR-3100	SRVO-3100			.295 - .335 (7.5 - 8.5)			.39 (10)		.43 (11)	
SR-3535	SRVO-3535	.142 - .146 (3.6 - 3.7)	26.4 (12)	.047 - .083 (1.2 - 2.1)	.252 (6.4)	.063 (1.6)	.14 (3.5)	.138 (3.5)	.20 (5.1)	
SR-3545	SRVO-3545			.083 - .118 (2.1 - 3)			.18 (4.5)		.24 (6.1)	
SR-3550	SRVO-3550			.106 - .142 (2.7 - 3.6)			.20 (5)		.24 (6.1)	
SR-3555	SRVO-3555			.118 - .157 (3 - 4)			.22 (5.6)		.28 (7.1)	
SR-3560	SRVO-3560			.146 - .181 (3.7 - 4.6)			.24 (6)		.28 (7.1)	
SR-3570	SRVO-3570			.177 - .217 (4.5 - 5.5)			.28 (7.2)		.35 (9)	
SR-3580	SRVO-3580			.217 - .256 (5.5 - 6.5)			.32 (8)		.36 (9.1)	
SR-4050	SRVO-4050	.161 - .165 (4.1 - 4.2)	44.0 (20)	.098 - .138 (2.5 - 3.5)	.315 (8)	.071 (1.8)	.20 (5)	.157 (4)	.28 (7.1)	2
SR-4060	SRVO-4060			.138 - .177 (3.5 - 4.5)			.24 (6)		.28 (7.1)	
SR-4070	SRVO-4070			.177 - .217 (4.5 - 5.5)			.28 (7.2)		.35 (9)	
SR-4080	SRVO-4080			.217 - .256 (5.5 - 6.5)			.32 (8)		.35 (9)	
SR-4090	SRVO-4090			.256 - .295 (6.5 - 7.5)			.35 (9)		.43 (11)	
SR-4100	SRVO-4100			.295 - .335 (7.5 - 8.5)			.39 (10)		.43 (11)	
SR-4120	SRVO-4120			.354 - .413 (9 - 10.5)			.47 (12)		.55 (14)	
SR-5045	SRVO-5045	.201 - .205 (5.1 - 5.2)	55.0 (25)	.059 - .098 (1.5 - 2.5)	.354 (9)	.087 (2.2)	.18 (4.5)	.197 (5)	.26 (6.5)	
SR-5055	SRVO-5055			.098 - .138 (2.5 - 3.5)			.22 (5.6)		.26 (6.5)	
SR-5065	SRVO-5065			.138 - .177 (3.5 - 4.5)			.26 (6.5)		.34 (8.5)	
SR-5075	SRVO-5075			.177 - .217 (4.5 - 5.5)			.30 (7.5)		.34 (8.5)	
SR-5085	SRVO-5085			.217 - .256 (5.5 - 6.5)			.34 (8.5)		.41 (10.5)	
SR-5095	SRVO-5095			.256 - .295 (6.5 - 7.5)			.37 (9.5)		.41 (10.5)	
SR-5105	SRVO-5105			.295 - .335 (7.5 - 8.5)			.41 (10.5)		.47 (12)	
SR-6060	SRVO-6060	.240 - .244 (6.1 - 6.2)	66.0 (30)	.098 - .157 (2.5 - 4)	.472 (12)	.098 (2.5)	.24 (6)	.236 (6)	.35 (9)	
SR-6080	SRVO-6080			.138 - .217 (3.5 - 5.5)		.118 (3)	.32 (8)		.39 (10)	

*Add "B" for Black and "W" for White to the end of the part number. Colors: Green (GN), Yellow (YL), Red (RD), Blue (BL), and Gray (GY) are available by special order.

Available by special order; 5,000 piece minimum.

-800-621-1892
Get quote
Angic Global Solutions 1-888-872-0690
https://www.AngicGlobal.com Sales@AngicGlobal.com

SRHR

Snap Rivet Heat Resistant

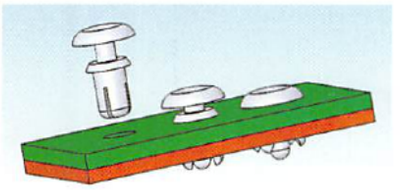

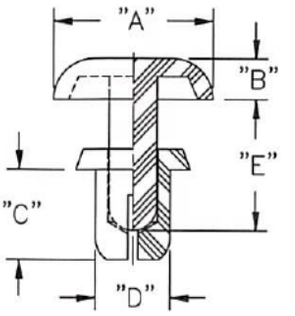

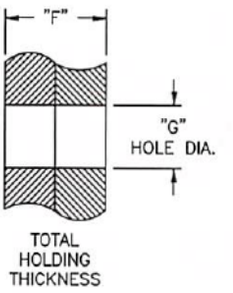

Features

- These rivets resist heat spikes which are typical in wave solder applications
- Withstands temperatures up to 306°F (152°C)
- Ideal for electronic/electrical, automotive or machinery applications where heat resistance is required

SRHR	Standard Pack: 1,000 per bag						
Mat'l: Nylon 4/6, RMS-56 Color: Tan	Hole Dia. "G"	Total Holding Thickness "F"	"A" ± .008	"B" ± .008	"C" ± .012	"D"	"E" ± .012
SRHR-3035	.122 - .126 (3.1 - 3.2)	.039 - .079 (1 - 2)	.252 (6.4)	.063 (1.6)	.14 (3.5)	.118 (3)	.20 (5.1)
SRHR-3045		.079 - .118 (2 - 3)			.18 (4.5)		.24 (6.1)
SRHR-3055		.118 - .157 (3 - 4)			.22 (5.6)		
SRHR-3065		.157 - .197 (4 - 5)			.26 (6.5)		.28 (7.1)
SRHR-3080		.197 - .256 (5 - 6.5)			.31 (8)		.35 (9)
SRHR-3535	.142 - .146 (3.6 - 3.7)	.047 - .083 (1.2 - 2.1)			.14 (3.5)	.138 (3.5)	.20 (5.1)
SRHR-3545		.087 - .122 (2.2 - 3.1)			.18 (4.5)		.24 (6.1)
SRHR-3555		.118 - .157 (3 - 4)			.22 (5.6)		.28 (7.1)
SRHR-4050	.161 - .165 (4.1 - 4.2)	.098 - .138 (2.5 - 3.5)	.315 (8)	.071 (1.8)	.20 (5)	.157 (4)	.28 (7.1)
SRHR-4060		.138 - .177 (3.5 - 4.5)			.24 (6)		
SRHR-4070		.177 - .217 (4.5 - 5.5)			.28 (7.2)		.35 (9)
SRHR-4080		.217 - .256 (5.5 - 6.5)			.32 (8)		
SRHR-4100		.295 - .335 (7.5 - 8.5)			.39 (10)		.43 (11)

SRP

Snap Rivet "P" Type

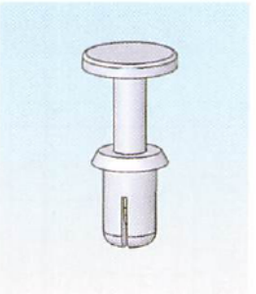

Fig. 1

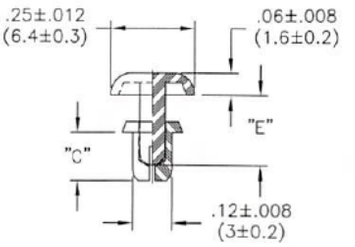

Fig. 2

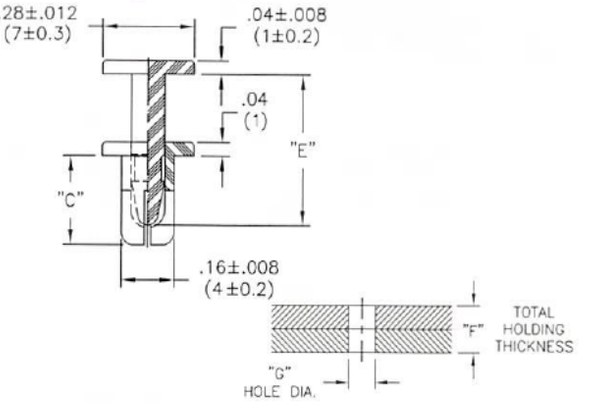

Features

- Withstands temperatures up to 311°F (155°C).

SRP		Standard Pack: 1,000 per bag			
Mat'l: Polysulfone, RMS-51 Color: Black	Hole Dia. "G"	Total Holding Thickness "F"	"C" ± .012	"E" ± .012	Fig.
SRP-3045	.122 - .126 (3.1 - 3.2)	.059 - .098 (1.5 - 2.5)	.18 (4.5)	.24 (6.1)	1
SRP-3055		.098 - .138 (2.5 - 3.5)	.22 (5.5)		
SRP-4065	.157 - .165 (4 - 4.2)	.138 - .177 (3.5 - 4.5)	.26 (6.5)	.43 (11)	2

539-4060 Sam
Get quote
Angic Global Solutions 1-888-872-0690
https://www.AngicGlobal.com Sales@AngicGlobal.com

SRH
Snap Rivet H Type

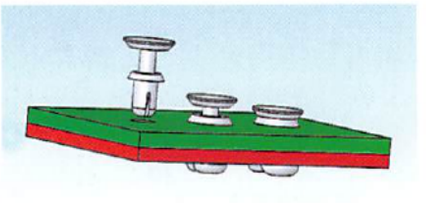

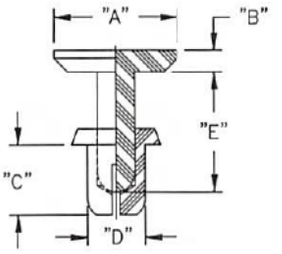

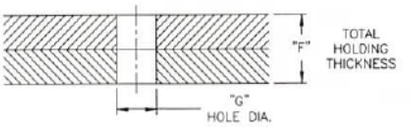

C

Features

- Flat head design eases assembly and disassembly

SRH	SRHV0	Standard Pack: 1,000 per bag						
Mat'l: Nylon 6, RMS-52 Color: Black	Mat'l: Flame Ret. Nyl. 66/6, RMS-103 Color: Black	Hole Dia. "G"	Total Holding Thickness "F"	"A" ± .008	"B" ± .008	"C" ± .012	"D"	"E" ± .012
SRH-3035	SRHV0-3035	.122 - .126 (3.1 - 3.2)	.039 - .079 (1 - 2)	.252 (6.4)	.039 (1)	.14 (3.5)	.118 (3)	.26 (6.5)
SRH-3045	SRHV0-3045		.079 - .118 (2 - 3)			.18 (4.5)		
SRH-3055	SRHV0-3055		.118 - .157 (3 - 4)			.22 (5.6)		
SRH-3065	SRHV0-3065		.157 - .197 (4 - 5)	.236 (6)		.26 (6.5)		.39 (10)
SRH-3080	SRHV0-3080		.197 - .256 (5 - 6.5)			.31 (8)		
SRH-3090	SRHV0-3090		.256 - .295 (6.5 - 7.5)	.252 (6.4)		.35 (9)		.47 (12)
SRH-3100	SRHV0-3100		.295 - .335 (7.5 - 8.5)			.39 (10)		
SRH-3535	SRHV0-3535	.142 - .146 (3.6 - 3.7)	.039 - .079 (1 - 2)	.252 (6.4)		.14 (3.5)	.138 (3.5)	.26 (6.5)
SRH-3545	SRHV0-3545		.079 - .118 (2 - 3)			.18 (4.5)		
SRH-3555	SRHV0-3555		.118 - .157 (3 - 4)	.236 (6)		.22 (5.6)		.39 (10)
SRH-3560	SRHV0-3560		.138 - .177 (3.5 - 4.5)			.24 (6)		
SRH-3570	SRHV0-3570		.177 - .217 (4.5 - 5.5)			.28 (7.2)		
SRH-3580	SRHV0-3580		.217 - .256 (5.5 - 6.5)			.31 (8)		

Available by special order; 5,000 piece minimum.

SRT
Snap Rivet T Type

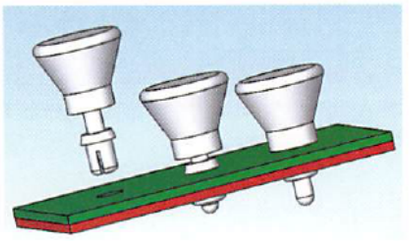

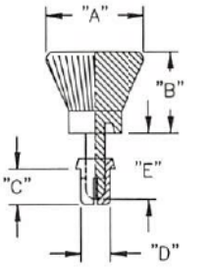

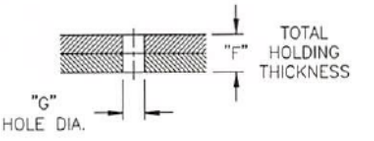

Features

- For applications requiring speedy assembly and disassembly
- Push/pull head allows rivets to snap in and out up to 25 times

Mat'l Nylon 6, RMS-52* Color: Black	Standard Pack: 1,000 per bag						
	Hole Dia. "G"	Thickness "F"	"A"	"B"	"C"	"D"	"E"
SRT-3035	.122 - .126 (3.1 - 3.2)	.039 - .079 (1 - 2)	.394 (10)	.315 (8)	.14 (3.5)	.118 (3)	.26 (6.6)
SRT-3045		.079 - .118 (2 - 3)			.18 (4.5)		
SRT-3055		.118 - .157 (3 - 4)			.22 (5.5)		
SRT-3065		.157 - .197 (4 - 5)			.26 (6.5)		.35 (9)
SRT-3075		.197 - .236 (5 - 6)			.30 (7.5)		
SRT-3080		.217 - .256 (5.5 - 6.5)			.32 (8)		
SRT-3535	.142 - .146 (3.6 - 3.7)	.039 - .079 (1 - 2)			.14 (3.5)	.139 (3.5)	.26 (6.6)
SRT-3545		.079 - .118 (2 - 3)			.18 (4.5)		
SRT-3555		.118 - .146 (3 - 3.7)			.22 (5.5)		
SRT-3570		.150 - .205 (3.8 - 5.2)			.28 (7)		.35 (9)
SRT-3580		.209 - .256 (5.3 - 6.5)			.32 (8)		
SRT-4050	.161 - .165 (4.1 - 4.2)	.098 - .138 (2.5 - 3.5)	.472 (12)		.20 (5)	.157 (4)	.30 (7.6)
SRT-4060		.138 - .177 (3.5 - 4.5)			.24 (6)		
SRT-4070		.177 - .216 (4.5 - 5.5)			.28 (7)		.44 (11.2)
SRT-4080		.216 - .256 (5.5 - 6.5)			.32 (8)		
SRT-4090		.256 - .295 (6.5 - 7.5)			.35 (9)		
SRT-4100		.295 - .335 (7.5 - 8.5)			.39 (10)		

Available in white by special order. To order, add "W" to the end of the part number

*Available in UL94 VO Nylon, RMS-103 by special order.

-800-621-1892
ANGIC
Get quote
Angic Global Solutions 1-888-872-0690
https://www.AngicGlobal.com Sales@AngicGlobal.com

USR
Unscrewing Snap Rivet

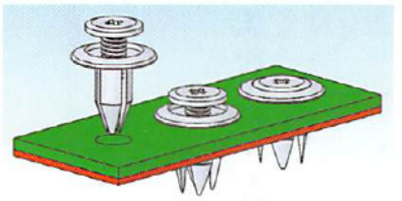

Fig. 1

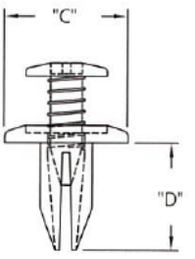

Fig. 2

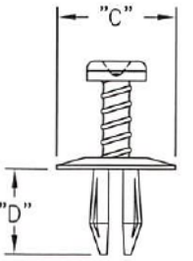

Fig. 3

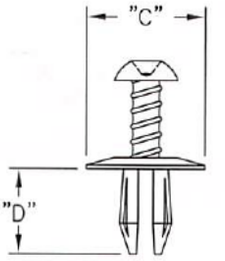

Fig. 4

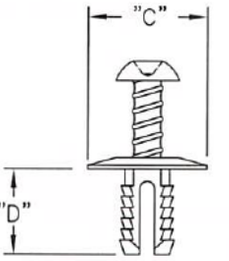

Features

- Rivets are reusable. Installed easily by hand and removed with a Phillips head screwdriver

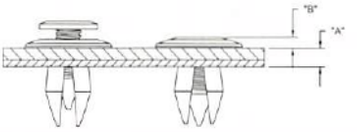

Part No.	Hole Dia. ± .003 (0.08)	"A" Total Holding Thickness	"B"	"C"	"D"	Fig.	Material	Standard Pack
USR-64125	.250 (6.4)	.126 - .172 (3.2 - 4.4)	.118 (3)	.594 (15.1)	.500 (12.7)	1	Nylon 6 RMS-52 Color: Black	500 per bag
USR-1131	.197 (5)	.158 - .276 (4 - 7)	.153 (3.9)	.472 (12)	.433 (11)	2	Nylon 6/6 RMS-115 Color: Black	1,000 per bag
USR-1132	.236 (6)			.630 (16)		3		
USR-1133	.315 (8)	.118 - .394 (3 - 10)	.157 (4)	.787 (20)	.551 (14)	4		

RRR
Removable Rivet

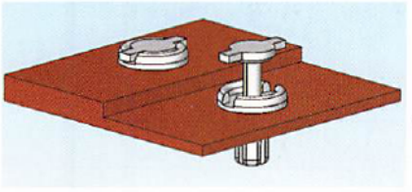

NEW

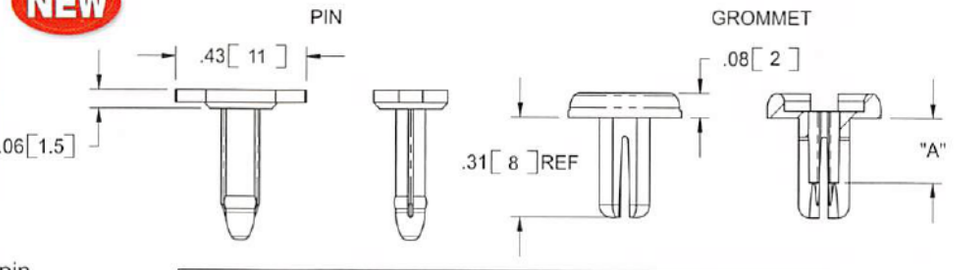

Features

- Unique design allows removal of the pin by pulling on the side tabs
- For use in round or square holes
- Pin and Grommet are supplied unassembled

Mat'l: Nylon 66/6, RMS-103 Color: Black		Standard Pack: 1,000 per bag	
Part No.	Hole Size	Panel Thickness	"A" Ref.
RRR-1	.188-.208 (4.76-5.28) Dia.	.059-.138 (1.5-3.5)	.14 (3.6)
RRR-2	Or .177 (4.5) Min. Square	.138-.217 (3.5-5.5)	.17 (4.4)

PPR/PPR-T
Push Rivet/Push Rivet Tool

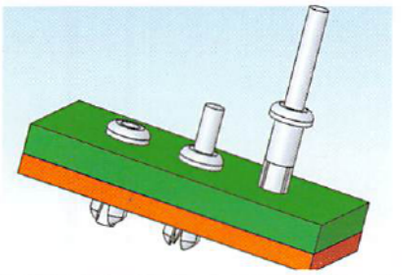

Fig. 1

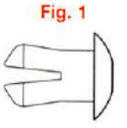

Fig. 2



Fig. 3

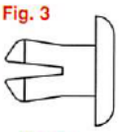

Fig. 4

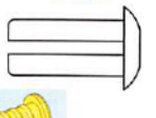

Fig. 5

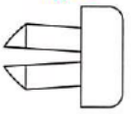

Fig. 6

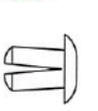



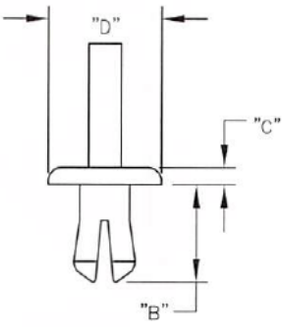

PPR				Standard Pack: 1,000 per bag				
Mat'l: Nylon 6/6, RMS-01	Color	Hole Dia. ± .003 (0.08)	Total Holding Thickness	"B" ± .016	"C" ± .016	"D" ± .016	Installation Tool	Fig.
PPR-5	Natural	.189 (4.8)	.039 - .375 (1 - 9.5)	.421 (10.7)	.063 (1.6)	.280 (7.1)	PPR-T1	4
PPR-93-7	Natural or Black	.197 (5)	.059 - .197 (1.5 - 5)	.291 (7.4)	.079 (2)			6
PPR-9	Natural	.252 (6.4)	.059 - .252 (1.6 - 6.4)	.366 (9.3)	.185 (4.7)	.437 (11.1)	Not Available	5
PPR-1		.217 (5.5)	.094 - .158 (2.4 - 4)	.449 (11.4)	.079 (2)	.370 (9.4)	PPR-T1	1
PPR-93-14B	Black	.197 (5)	.118 - .276 (3 - 7)	.433 (11)		.382 (9.7)		6
PPR-93-5	Natural or Black	.158 (4)	.158 - .256 (4 - 6.5)	.315 (8)	.059 (1.5)	.295 (7.5		
PPR-2	Natural	.189 (4.8)	.158 - .281 (4 - 7.1)	.382 (9.7)	.079 (2)	.429 (10.9)		2
PPR-4		.252 (6.4)	.280 - .500 (7.1 - 12.7)	.622 (15.8)		.469 (11.9)	Not Available	3

For parts also available in black (see table), add suffix "B" to the end of the part number.

Features

- Permanent locking design. Driving the plunger into the rivet causes the legs to expand and grip the board
- Easily installed by using the PPR installation tool, sold separately

39-4060 Samp
ANGIC
Get quote
Angic Global Solutions 1-888-872-0690
https://www.AngicGlobal.com Sales@AngicGlobal.com

C

PPR
Push Rivet Blunt

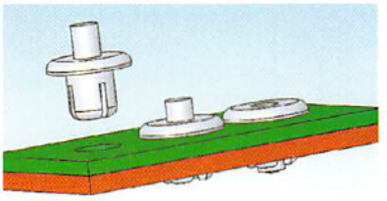



Features

- Design is easily installed manually
- Driving the plunger into the rivet causes the legs to expand and grip the board

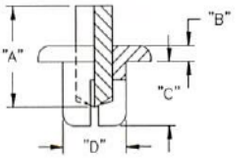

PPR				Standard Pack: 1,000 per bag				
Part No.	Hole Dia.	Total Holding Thickness	"A" ± .008 (0.2)	"B" ± .008 (0.2)	"C" ± .012 (0.3)	"D"	"E" ± .012 (0.3)	Material
PPR-3045B	.122 (3.1)	.08 - .12 (2 - 3)	.35 (8.9)	.08 (2)	.18 (4.5)	.118 (3)	.23 (5.8)	Nylon 6, RMS-52 Color: Black
PPR-3055B		.12 - .16 (3 - 4)			.22 (5.6)			
PPR-4050B	.161 (4.1)	.10 - .14 (2.5 - 3.5)	.36 (9.2)	.09 (2.2)	.20 (5)	.157 (4)	.31 (8)	
PPR-4060B		.14 - .18 (3.5 - 4.5)			.24 (6)			
PPR-4850B	.189 (4.8)	.05 - .12 (1.2 - 3)	.41 (10.4)	.13 (3.3)	.20 (5.1)	.189 (4.8)	.39 (9.9)	
PPR-5050B	.201 (5.1)	.08 - .12 (2 - 3)	.37 (9.4)	.11 (2.8)		.197 (5)	.37 (9.4)	
PPR-5060B		.12 - .16 (3 - 4)			.24 (6.1)			
PPR-5070B		.16 - .20 (4 - 5)	.45 (11.4)		.28 (7.1)			
PPR-5080B		.20 - .24 (5 - 6)			.32 (8.1)			
PPR-5090B		.24 - .28 (6 - 7)	.49 (12.4)		.35 (8.9)			
PPR-5100B		.28 - .31 (7 - 8)	.54 (13.6)		.39 (10)		.37 (9.5)	
PPR-6060B	.240 (6.1)	.10 - .16 (2.5 - 4)	.37 (9.4)	.06 (1.5)	.24 (6.1)	.236 (6)	.43 (10.9)	Polyethylene, RMS-142 Color: Black
Available in white color by special order. To order, add "W" to the end of the part number.								

CR
Clinch Rivets

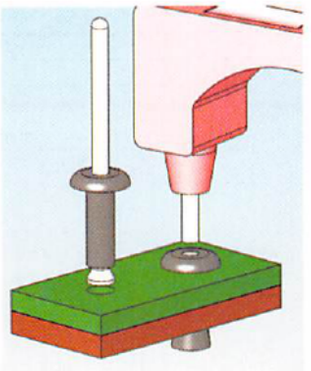

Features

- Installed with a standard pop rivet installation gun. Richco does not sell the installation tools
- After the base of the rivet is installed through the holes in the panel, the installation tool pulls the grommet through the base of the rivet, locking it into place. The tool will finally cut off the excess grommet, leaving a flush top

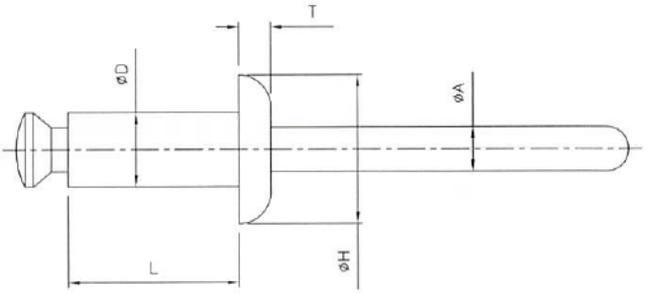

Mat'l: Rivet - Nylon 6, RMS-106 Color: Black or White*, Mandrel - Polycarbonate, RMS-107 Color: Clear										
Part No.	Mounting Hole Dia.	Panel Thickness	"D" Dia.	"L"	"H" Dia.	"T"	"A" Dia.	Tensile Strength (Yield) Typ.	Shear Strength Typ.	Standard Pack Quantity
CR32-1	3.3	1 - 4	3.2	6.4	6.4	1.4	2.1	12kg	20kg	1,000
CR32-2		4 - 7		9.6						
CR32-3		7 - 10		12.7						
CR40-1	4.1	1 - 4	4	6.4	8	1.8	2.4	18kg	25kg	
CR40-2		4 - 7		9.6						
CR40-3		7 - 10		12.7						
CR48-1	4.9	1.5 - 5	4.8	8	9.6	2	2.8	28kg	40kg	500
CR48-2		5 - 8		11.2						
CR48-3		8 - 11		14.4						
CR56-1	5.7	2 - 5.5	5.6	9.6	12	2.2	3.4	40kg	65kg	
CR56-2		5.5 - 8.5		12.7						
CR56-3		8.5 - 12		15.9						
All dimensions in millimeters.										
*Add -1 for Black, -2 for White to the end of the part number.										

-800-621-1892
Get quote
Angic Global Solutions 1-888-872-0690
https://www.AngicGlobal.com Sales@AngicGlobal.com

DF
Drive Fastener

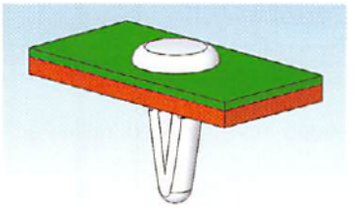

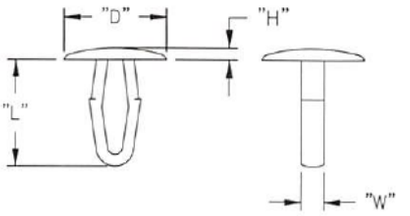

Features

- Hollow body increases flexibility during insertion and removal process
- Can be used as a decorative hole plug

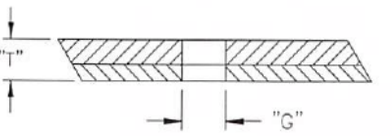

DF				Standard Pack: 1,000 per bag			
Mat'l: Acetal, RMS-14 Color: White	Mat'l: Flame Ret. Nylon 6/6, RMS-19 Color: Natural	Hole Dia. "G" ± .002 (0.05)	Total Holding Thickness "T"	"D" ± .010	"H" ± .010	"L" Ref.	"W" Ref.
DF-137-010	Not Available	.126 (3.2)	.039 - .177 (1 - 4.5)	.315 (8)	.059 (1.5)	.512 (13)	.106 (2.7)
DF-137-020	DFV0-137-020	.153 (3.9)	.039 - .197 (1 - 5)	.354 (9)	.063 (1.6)	.551 (14)	.116 (2.9)
DF-137-030	DFV0-137-030	.185 (4.7)	.039 - .216 (1 - 5.5)	.394 (10)	.067 (1.7)	.590 (15)	.134 (3.4)
DF-137-031	DFV0-137-031			.433 (11)	.114 (2.9)		
DF-137-040	DFV0-137-040	.252 (6.4)	.059 - .256 (1.5 - 6.5)	.472 (12)	.079 (2)	.669 (17)	.153 (3.9)
DF-137-050	Not Available	.307 (7.8)	.059 - .275 (1.5 - 7)	.551 (14)	.087 (2.2)	.748 (19)	.166 (4.2)
DF-137-060	Not Available	.216 (5.5)	.236 - .354 (6 - 9)	.472 (12)	.079 (2)	.709 (18)	.150 (3.8)

MMB
Mini Mounting Button

NEW

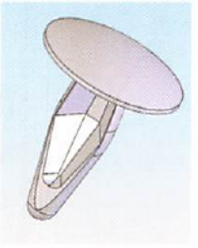

Fig. 1

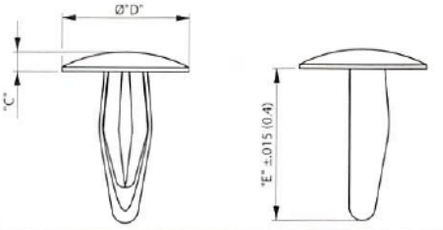

Fig. 2

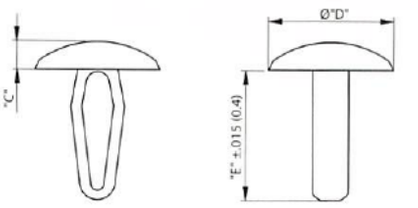

Features

- Fastens thin gauge material or mounts lightweight components
- Economical and easy to install

Mat'l: Nylon 6/6, RMS-01* Color: Natural	Standard Pack: 1,000 per bag					
	Mounting Hole Dia.	Total Holding Thickness	"C"	"D"	"E"	Fig
MMB-125-01	.123-.127 (3.1-3.22)	.08-.10 (2-2.5)	.04 (1)	.27 (6.9)	.33 (8.4)	1
MMB-136-01	.131-.141 (3.32-3.58)	.12-.16 (2.9-4)	.07 (1.7)	.41 (10.3)	.44 (11.1)	
MMB-187-01	.182-.192 (4.61-4.88)	.10-.16 (2.5-4)	.09 (2.2)	.50 (12.7)	.43 (10.9)	
MMB-210-01	.197-.213 (5-5.4)	.10-.16 (2.5-4)	.12 (3)	.55 (14)	.55 (14)	2
MMB-250-01	.247-.253 (6.27-6.42)	.10-.22 (2.5-5.6)	.09 (2.2)	.50 (12.7)	.64 (16.3)	1
Available in UL94 V0 material by special order. To order, replace -01 with -19.						
Also available in black color. To order, add "B" to the end of the part number.						

MB
Mounting Button

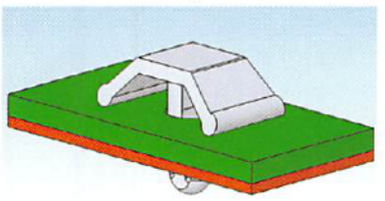

MB-156

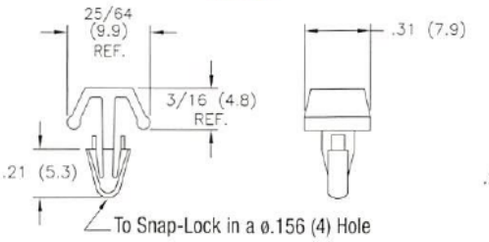

MB-187

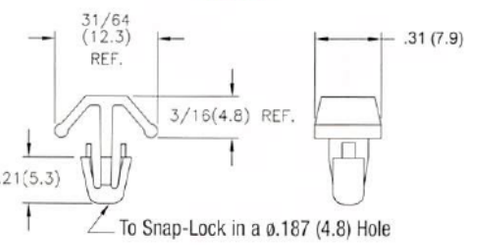

Features

- Barbed arrow base locks securely; releasable from underside of boards
- Installs quickly by hand
- Ideal for applications where metal screws or rivets cannot be used

Material: Nylon 6/6, RMS-01* Color: Natural		Standard Pack: 1,000 per bag
		Total Holding Thickness
MB-1-156	MB-1-187	1/32-3/32 (0.8-2.4)
MB-3-156	MB-3-187	3/32-5/32 (2.4-4)
MB-5-156	MB-5-187	3/16-7/32 (4.8-5.6)
MB-7-156	MB-7-187	7/32-9/32 (5.6-7.1)
MB-9-156	MB-9-187	5/16-3/8 (7.9-9.5)
MB-11-156	MB-11-187	3/8-7/16 (9.5-11.1)
MB-13-156	MB-13-187	7/16-1/2 (11.1-12.7)
MB-15-156	MB-15-187	1/2-9/16 (12.7-14.3)
MB-17-156	MB-17-187	9/16-5/8 (14.3-15.9)
*Available in UL94 V0 material by special order. To order, add -19 to the end of the part number.		

ANGIC GLOBAL SOLUTIONS
Get quote
Angic Global Solutions 1-888-872-0690
https://www.AngicGlobal.com Sales@AngicGlobal.com

C

PL
Pawl Lock

NEW

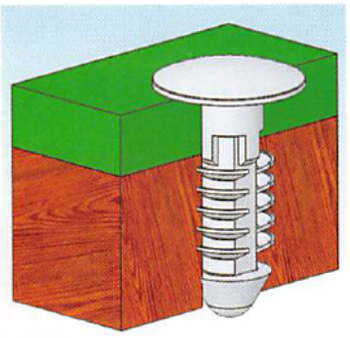

Material: Nylon 6/6, RMS-01 Color: Natural				Standard Pack: 1,000 per bag			
Part No.	"A"	"B"	"C"	"D"	"E"	Hole Size	Fig.
PL-250-10-01	.625 (15.9)	.125 (3.2)	.078 (2)	.500 (12.7)	.161 (4.1)	.250 (6.35)	1
PL-250-12-01	.751 (19.1)	.251 (6.4)	.070 (1.8)				
PL-250-20-01	.984 (25)	.082 (2.1)		.354 (9)	.196 (5)	.216 (5.5)	2

Fig 1

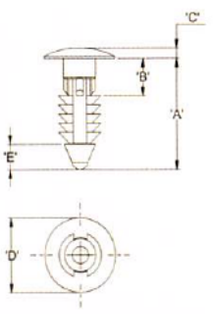

Fig 2

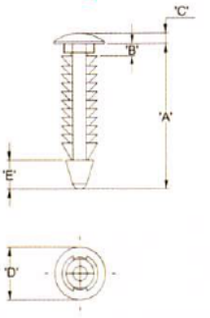

Features
- For use in threaded, non-threaded, drilled or punched holes
- Fastens to a variety of materials: wood, threaded metal, particle board, plastic, foam or rubber panels
- Ribs deflect when pushed into hole then spring back for a secure, non-removable lock

MPLE
Mini Pawl Locks

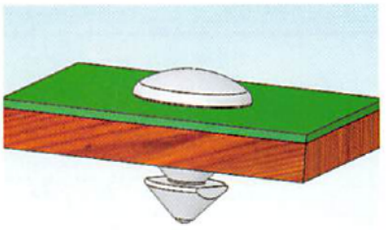

MPLE-3.5M-01

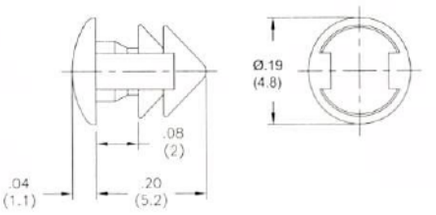

MPLE-3.2M-01

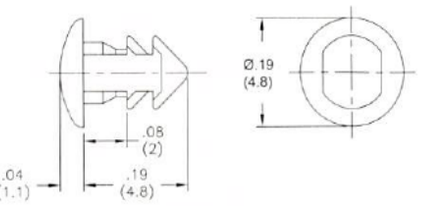

MPLE-3.2M/3.5M-01

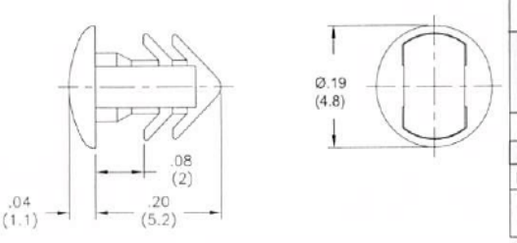

MPLE		Standard Pack: 1,000 per bag
Mat'l: Nylon 6/6, RMS-01* Color: Natural	Dia. Hole	Total Holding Thickness
MPLE-3.2M-01	.126 (3.2)	.073 (1.85) Max.
MPLE-3.5M-01	.138 (3.5)	
MPLE3.2M/3.5M-01	.126 - .138 (3.2 - 3.5)	
*Available in UL94 V0 material by special order. To order, replace -01 with -19.		

Features
- Easily push mounts into a panel or board

BPF
Barbed Push Fastener

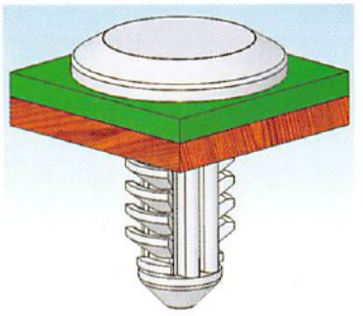

BPF-A414

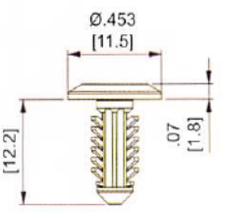

BPF-F4410

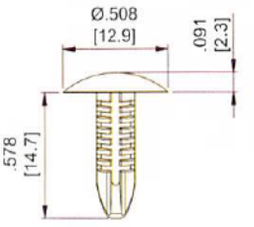

BPF	Standard Pack: 1,000 per bag	
Mat'l: Glass-filled Nylon 6/6, RMS-49 Color: Black	Hole Diameter ± 0.002 (0.05)	Total Holding Thickness
BPF-A414	.185 (4.7)	.031-.118 (0.8-3)
BPF-F4410	.197 (5)	.059-.295 (1.5-7.5)
BPF-F2495	.276 (7)	.125-.236 (3.2-6)
BPF-F3T31	.197 (5)	.079-.394 (2-10)
BPF-F1G12	.276 (7)	.079-.591 (2-15)

BPF-F2495

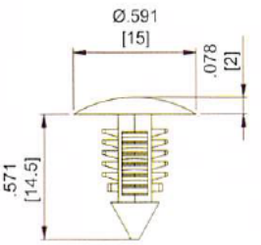

BPF-F3T31

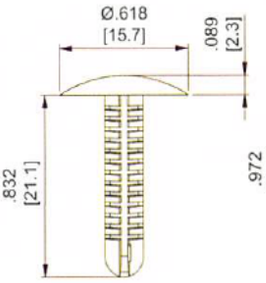

BPF-F1G12

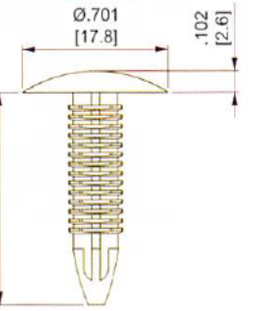

Features
- Ribs deflect when pushed into hole then spring back for a secure, non-removable lock

-800-621-1892
ANGIC
Get quote
Angic Global Solutions 1-888-872-0690
https://www.AngicGlobal.com Sales@AngicGlobal.com

RBF
Barbed Fasteners

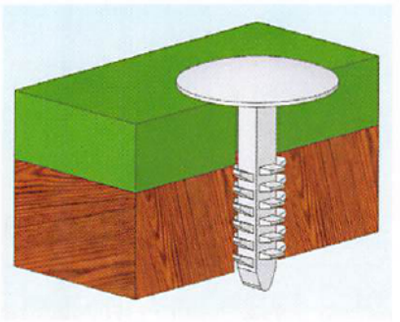

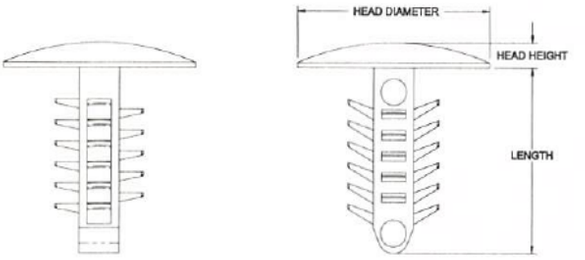

Features
- Ribs deflect when pushed into hole then spring back for a secure, non-removable lock
- The head, barbed end, and body length are made from insert tooling; other combinations are available by special order
- For RBS-6.4 and RBS-7.1 Series parts, if using in metal, the leading edge of the hole must be broken

RBF			Standard Pack: 1,000 per bag		
Mat'l: Nylon 6/6, RMS-01* Color: Black	Hole Diameter ± 0.003 (0.08)	Head Diameter	Suggested Total Board Thickness	Head Height	Length
RBF-4-8.6-8	.157 (4)	.32 (8)	.08-.17 (2.1-4.3)	.04 (1)	.34 (8.6)
RBF-4-11.1-8			.08-.28 (2.1-7.2)		.44 (11.1)
RBF-4-15-8			.22-.42 (5.7-10.7)		.59 (15)
RBF-4-8.6-12		.47 (12)	.08-.17 (2.1-4.3)	.06 (1.5)	.34 (8.6)
RBF-4-11.1-12			.08-.28 (2.1-7.2)		.44 (11.1)
RBF-4-15-12			.22-.42 (5.7-10.7)		.59 (15)
RBF-4-8.6-16		.63 (16)	.08-.17 (2.1-4.3)	.08 (2)	.34 (8.6)
RBF-4-11.1-16			.08-.28 (2.1-7.2)		.44 (11.1)
RBF-4-15-16			.22-.42 (5.7-10.7)		.59 (15)
RBF-4.8-8.6-8	.188 (4.76)	.32 (8)	.08-.17 (2.1-4.3)	.04 (1)	.34 (8.6)
RBF-4.8-11.1-8			.08-.28 (2.1-7.2)		.44 (11.1)
RBF-4.8-15-8			.22-.42 (5.7-10.7)		.59 (15)
RBF-4.8-8.6-12		.47 (12)	.08-.17 (2.1-4.3)	.06 (1.5)	.34 (8.6)
RBF-4.8-11.1-12			.08-.28 (2.1-7.2)		.44 (11.1)
RBF-4.8-15-12			.22-.42 (5.7-10.7)		.59 (15)
RBF-4.8-8.6-16		.63 (16)	.08-.17 (2.1-4.3)	.08 (2)	.34 (8.6)
RBF-4.8-11.1-16			.08-.28 (2.1-7.2)		.44 (11.1)
RBF-4.8-15-16			.22-.42 (5.7-10.7)		.59 (15)
RBF-6.4-8.6-8	.250 (6.35)	.32 (8)	.08-.17 (2.1-4.3)	.04 (1)	.34 (8.6)
RBF-6.4-11.1-8			.08-.28 (2.1-7.2)		.44 (11.1)
RBF-6.4-15-8			.22-.42 (5.7-10.7)		.59 (15)
RBF-6.4-8.6-12		.47 (12)	.08-.17 (2.1-4.3)	.06 (1.5)	.34 (8.6)
RBF-6.4-11.1-12			.08-.28 (2.1-7.2)		.44 (11.1)
RBF-6.4-15-12			.22-.42 (5.7-10.7)		.59 (15)
RBF-6.4-8.6-16		.63 (16)	.08-.17 (2.1-4.3)	.08 (2)	.34 (8.6)
RBF-6.4-11.1-16			.08-.28 (2.1-7.2)		.44 (11.1)
RBF-6.4-15-16			.22-.42 (5.7-10.7)		.59 (15)
RBF-7.1-11.1-8	.281 (7.14)	.32 (8)	.08-.28 (2.1-7.2)	.04 (1)	.44 (11.1)
RBF-7.1-15-8			.15-.42 (3.8-10.7)		.59 (15)
RBF-7.1-19-8			.27-.56 (6.9-14.2)		.75 (19)
RBF-7.1-11.1-12		.47 (12)	.08-.28 (2.1-7.2)	.06 (1.5)	.44 (11.1)
RBF-7.1-15-12			.15-.42 (3.8-10.7)		.59 (15)
RBF-7.1-19-12			.27-.56 (6.9-14.2)		.75 (19)
RBF-7.1-11.1-16		.63 (16)	.08-.28 (2.1-7.2)	.08 (2)	.44 (11.1)
RBF-7.1-15-16			.15-.42 (3.8-10.7)		.59 (15)
RBF-7.1-19-16			.27-.56 (6.9-14.2)		.75 (19)
*Available in UL94 V0 material by special order.					
Natural color available by special order.					

PFP
Press Fit Pin

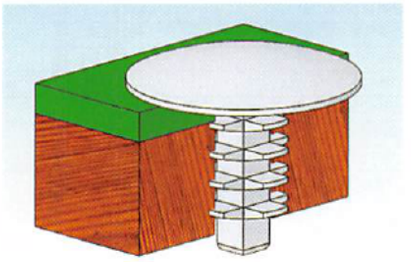

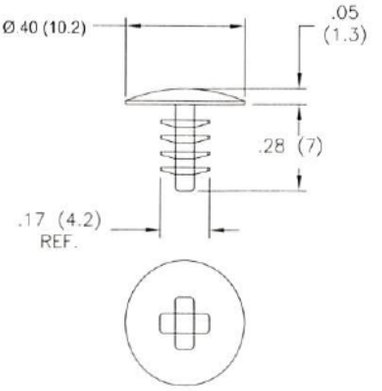

PFP	Standard Pack: 1,000 per bag	
Mat'l: Nylon 6/6, RMS-01 Color: Natural	Hole Diameter	Panel Thickness
PFP-7-01	.138 ± .002 (3.5 ± 0.05)	.25 (6.35) Min.

Features
- Low profile head is ideal for tight spaces

539-4060 Sam
Get quote
Angic Global Solutions 1-888-872-0690
https://www.AngicGlobal.com Sales@AngicGlobal.com

C

BR
Barbed Rivet

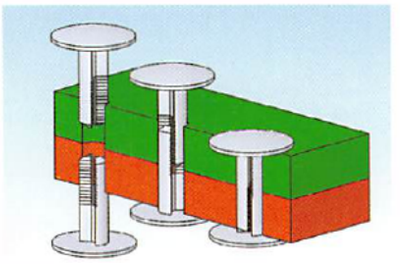

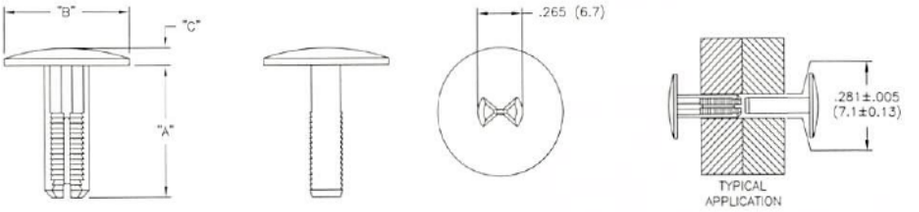

Features
- Complete assembly requires two parts. They snap into each other, holding flat panels together
- Allows for low profile button heads on both sides of panel
- Serrated teeth adjust to a variety of thicknesses for a secure fit

BR				Standard Pack: 1,000 per bag (500 sets per bag)	
Mat'l: Nylon 6/6, RMS-01* Color: Natural	"A" Ref.	"B" ± .010 (0.25)	"C" ± .010 (0.25)	Total Holding Thickness	Hole Diameter
BR1-226-01	.226 (5.7)	.750 (19.1)	.093 (2.4)	.235-.297 (6-7.5)	.281±.005 (7.1±0.13)
BR1-344-01	.344 (8.7)			.346-.502 (8.8-12.8)	
BR1-488-01	.488 (12.4)			.500-.812 (12.7-20.6)	
BR1-768-01	.768 (19.5)			.781-1.375 (19.8-34.9)	
BR2-226-01	.226 (5.7)	.406 (10.3)	.062 (1.6)	.235-.297 (6-7.5)	
BR2-344-01	.344 (8.7)			.346-.502 (8.8-12.8)	
BR2-488-01	.488 (12.4)			.500-.812 (12.7-20.6)	
BR2-768-01	.768 (19.5)			.781-1.375 (19.8-34.9)	
*Available in UL94 V0 material by special order. To order, replace -01 with -19.					

MBRR/MBRP
Mini Barbed Rivet

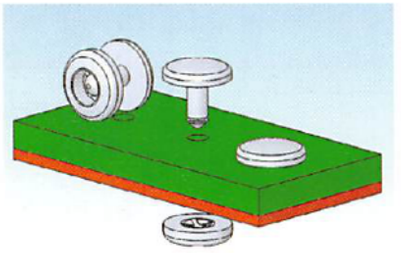

MBRR1-01 MBRP-XXX-01

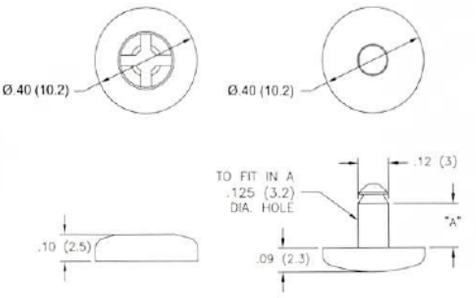

Material: Nylon 6/6, RMS-01 Color: Natural		
Part No.	Standard Pack: 1,000 per bag	
	"A"	Panel Thickness Max
MBRP1-030-01	.063 (1.6)	.030 (0.8)
MBRP1-062-01	.095 (2.4)	.062 (1.6)
MBRP1-100-01	.133 (3.4)	.100 (2.5)
MBRP1-125-01	.158 (4)	.125 (3.2)
MBRP1-187-01	.220 (5.6)	.187 (4.8)
MBRP1-250-01	.283 (7.2)	.250 (6.4)
Female part sold separately and is common to all sizes in the MBRP-1 Series. To order, use part number MBRR1-01.		

Features
- Combination of two mating parts to lock flat surface together
- Excellent for light load applications

SLPA
Snap Lock Pin with Arrowhead

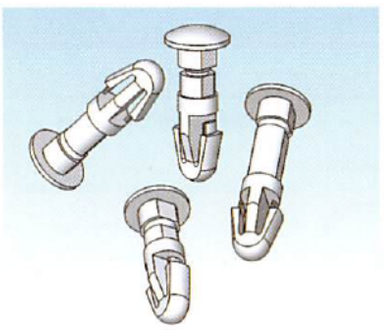

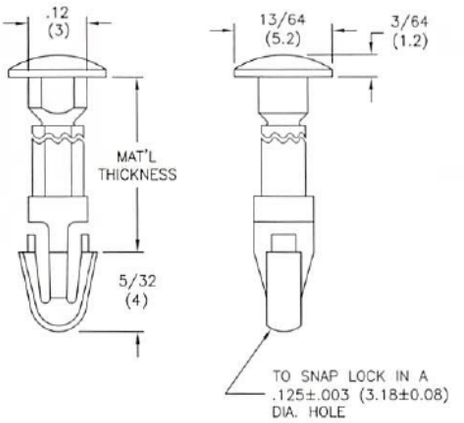

Material: Nylon 6/6, RMS-01* Color: Natural	Standard Pack: 1,000 per bag
	Material Thickness Maximum
SLPA125-187-01	.187 (4.7)
SLPA125-250-01	.250 (6.4)
SLPA125-312-01	.312 (7.9)
SLPA125-375-01	.375 (9.5)
SLPA125-500-01	.500 (12.7)
SLPA125-625-01	.625 (15.9)
SLPA125-750-01	.750 (19.1)
*Available in UL94 V0 material by special order. To order, replace -01 with -19.	

Features
- Economical and ideal for lightweight applications

800-621-1892
Get quote
Angic Global Solutions 1-888-872-0690
https://www.AngicGlobal.com Sales@AngicGlobal.com

HSR
Heat Sink Spring Mount Rivet

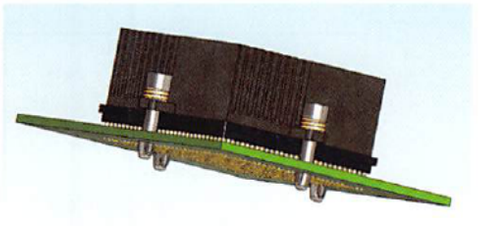

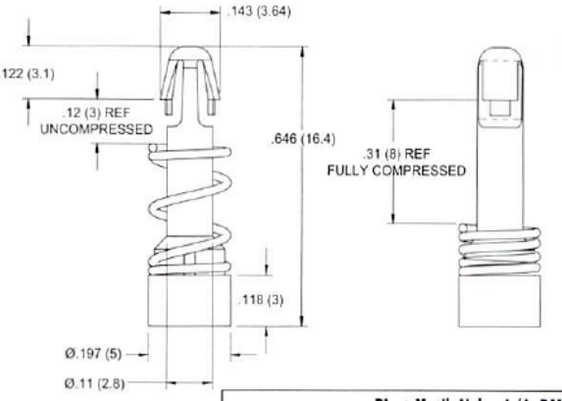

NEW

Features

- Fastens a heat sink to a processor chip on a PCB
- The spring provides continuous pressure to the heat sink which improves conductivity
- The rivet is easily installed by hand

Rivet Mat'l: Nylon 6/6, RMS-47 Color: Natural		
Spring Mat'l: Steel, RMS-326 Chrome Plated		
Standard Pack: 1,000 per bag		
Part No.	**Heat Sink Hole**	**Chassis Hole**
HSR-1	Inserts through a Ø.125 - .157 (3.18 - 4) Hole	Snap-lock into a Ø.118±.003 (3±0.08) Hole

SLP-1/SLP-2
Snap Lock Pin

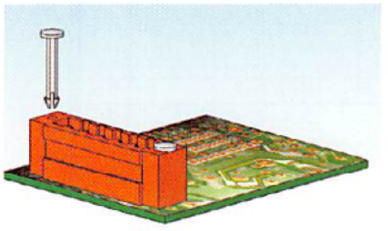

Features

- Typically used to fix connectors to printed circuit boards for wave soldering

SLP-1 Open-Arrow Base

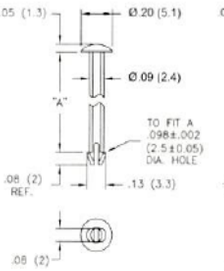

SLP-2 Tear-Drop Base

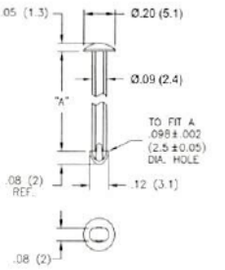

Material: Nylon 6/6, RMS-01 Color: Natural		Standard Pack: 1,000 per bag
Open-Arrow Base	**Tear-Drop Base**	**"A" ± .016**
SLP-1-100-177-01	SLP-2-100-177-01	.177 (4.5)
SLP-1-100-221-01	SLP-2-100-221-01	.221 (5.6)
SLP-1-100-236-01	SLP-2-100-236-01	.236 (6)
SLP-1-100-245-01	SLP-2-100-245-01	.245 (6.22)
SLP-1-100-307-01	SLP-2-100-307-01	.307 (7.8)
SLP-1-100-316-01	SLP-2-100-316-01	.316 (8.02)
SLP-1-100-330-01	SLP-2-100-330-01	.330 (8.38)
SLP-1-100-413-01	SLP-2-100-413-01	.413 (10.5)
SLP-1-100-638-01	SLP-2-100-638-01	.638 (16.2)
SLP-1-100-660-01	SLP-2-100-660-01	.660 (16.76)
SLP-1-100-701-01	SLP-2-100-701-01	.701 (17.8)
Available by special order only; 5,000 piece minimum.		

SLP100/SLP125
Snap Lock Pin

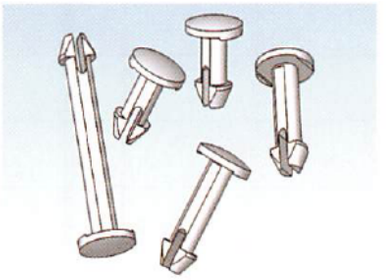

Features

- Typically used to fix connectors to printed circuit boards for wave soldering

SLP100-XXX-01

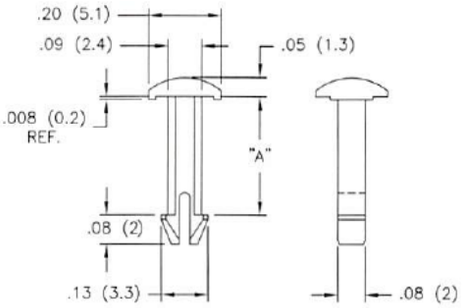

SLP125-187-01

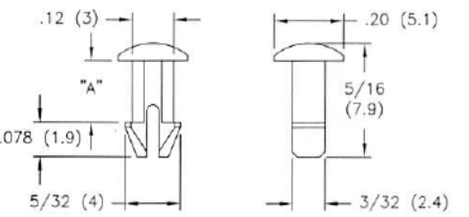

Material: Nylon 6/6, RMS-01* Color: Natural	Standard Pack: 1,000 per bag	
	"A" ± .010 (0.25)	**Hole Dia. ± .002 (0.05)**
SLP100-177-01	.177 (4.5)	.100 (2.5)
SLP100-307-01	.307 (7.8)	
SLP100-316-01	.316 (8)	
SLP100-638-01	.638 (16.2)	
SLP125-187-01	.187 (4.75)	.125 (3.2)
*Available in UL94 V0 material by special order. To order, replace -01 with -19.		

539-4060 Sam
Get quote
Angic Global Solutions 1-888-872-0690
https://www.AngicGlobal.com Sales@AngicGlobal.com

C

NSS/NSP
Slotted and Phillips Pan Head Screws

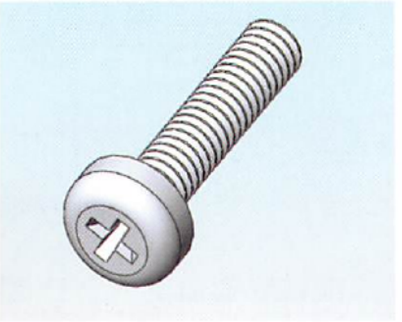

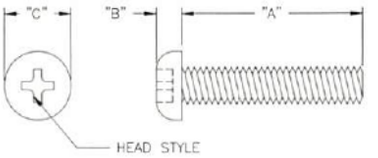

Mating Richco Hex Nuts		
Part#	Thread	Part#
NSS/NSP-4	#4-40	HN#4-40-01
NSS/NSP-6	#6-32	HN#6-32-01
NSS/NSP-8	#8-32	HN#8-32-01
See page 65		

Material: Nylon 6/6, RMS -01 Color: Natural	Standard Pack: 1,000 per bag			
	"B"	Thread	"C"	Head Style
NSS-4-#-01	.07 (1.8)	#4-40	.21 (5.3)	SLOTTED, PAN
NSS-6-#-01	.08 (2)	#6-32	.27 (6.9)	
NSS-8-#-01	.08 (2)	#8-32	.32 (8.1)	
NSP-4-#-01	.08 (2)	#4-40	.21 (5.3)	PHILLIPS, PAN
NSP-6-#-01	.09 (2.3)	#6-32	.26 (6.6)	
NSP-8-#-01	.11 (2.8)	#8-32	.32 (8.1)	

#	"A" +.000/-.030
-2-	1/8 (3.2)
-3-	3/16 (4.8)
-4-	1/4 (6.4)
-5-	5/16 (7.9)
-6-	3/8 (9.5)
-7-	7/16 (11.1)
-8-	1/2 (12.7)
-10-	5/8 (15.9)
-12-	3/4 (19.1)
-14-	7/8 (22.2)
-16-	1.00 (25.4)
Available by special order; 5,000 piece minimum	

Features
- Available in both slotted and Phillips head styles
- For applications requiring electrical insulation

NMS
Nylon Metric Screw

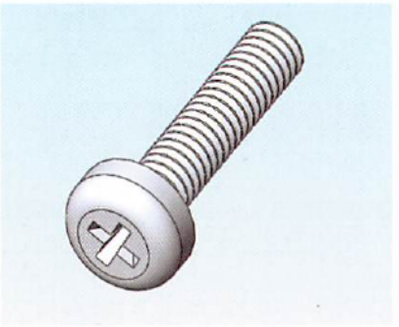

Material: Nylon 6/6, RMS-01 Color: Natural	Standard Pack: 1,000 per bag			
	"A"	"B"	"C"	Thread
NMS-306	.25 (6.4)	.10 (2.5)	.22 (5.7)	M3
NMS-308	.31 (7.9)			
NMS-310	.39 (9.9)			
NMS-312	.48 (12.2)			
NMS-408	.31 (7.9)	.11 (2.7)	.29 (7.4)	M4

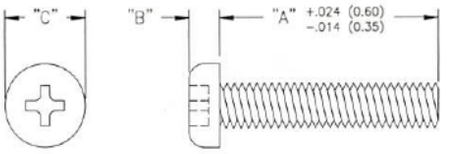

Notes

1-800-621-1892
Get quote
Angic Global Solutions 1-888-872-0690
https://www.AngicGlobal.com Sales@AngicGlobal.com

NSE-1207
Slotted Cheese Head Screw



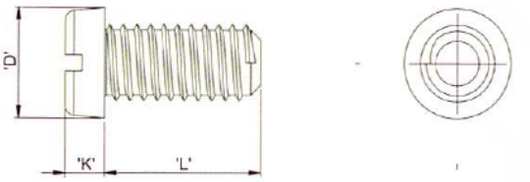

NSE-1207		Standard Pack: 1,000 per bag													
Mat'l: Nylon 6/6, RMS-179 Color: Natural	Thread	"L" Screw Length												"D"	"K"
NSE-1207-M2-L	M2	4	5	6	8	10	12	16	20	25	-	-	-	.149 (3.8)	.055 (1.4)
NSE-1207-M2.5-L	M2.5	-	-	6	8	10	12	16	20	25	-	-	-	.177 (4.5)	.070 (1.8)
NSE-1207-M3-L	M3	4	5	6	8	10	12	16	20	25	30	-	-	.216 (5.5)	.076 (2)
NSE-1207-M4-L	M4	-	-	6	8	10	12	16	20	25	30	40	-	.275 (7)	.102 (2.6)
NSE-1207-M5-L	M5	-	-	6	8	10	12	16	20	25	30	40	-	.334 (8.5)	.129 (3.3)
NSE-1207-M6-L	M6	-	-	6	8	10	12	16	20	25	30	40	50	.394 (10)	.153 (3.9)
All dimensions in millimeters															
Parts available by special order only. 5,000 piece minimum.															

NSE-1580
Slotted Pan Head Screw



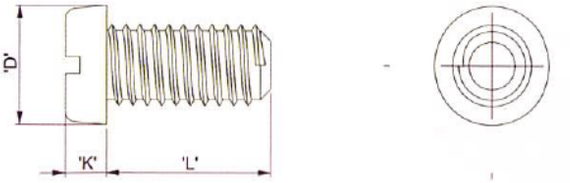

NSE-1580		Standard Pack: 1,000 per bag													
Mat'l: Nylon 6/6, RMS-179 Color: Natural	Thread	"L" Screw Length												"D"	"K"
NSE-1580-M2-L	M2	4	5	6	8	10	12	16	20	25	-	-	-	.158 (4)	.051 (1.3)
NSE-1580-M2.5-L	M2.5	-	-	6	8	10	12	16	20	25	-	-	-	.197 (5)	.059 (1.5)
NSE-1580-M3-L	M3	4	5	6	8	10	12	16	20	25	30	-	-	.220 (5.6)	.070 (1.8)
NSE-1580-M4-L	M4	-	-	6	8	10	12	16	20	25	30	40	-	.315 (8)	.094 (2.4)
NSE-1580-M5-L	M5	-	-	6	8	10	12	16	20	25	30	40	-	.374 (9.5)	.118 (3)
NSE-1580-M6-L	M6	-	-	6	8	10	12	16	20	25	30	40	50	.473 (12)	.141 (3.6)
All dimensions in millimeters															
Parts available by special order only. 5,000 piece minimum.															

NSE-2009
Counter Sunk Head Screw

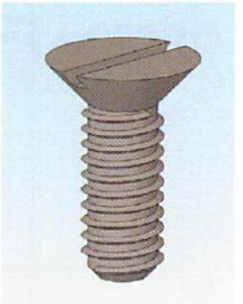

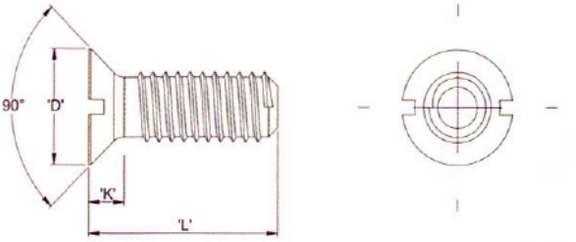

NSE-2009		Standard Pack: 1,000 per bag																	
Mat'l: Nylon 6/6, RMS-179 Color: Natural	Thread	"L" Screw Length																"D"	"K"
NSE-2009-M3-L	M3	5	6	-	8	-	-	-	16	-	20	25	30	-	-	42	-	-	.216 (5.5)	.064 (1.65)
NSE-2009-M4-L	M4	-	6	-	8	10	12	15	16	-	20	25	30	35	-	-	-	-	.330 (8.4)	.106 (2.7)
NSE-2009-M5-L	M5	-	-	7	8	10	12	15	16	18	20	25	30	35	40	-	-	-	.366 (9.3)	.106 (2.7)
NSE-2009-M6-L	M6	-	-	-	8	10	12	-	16	-	20	25	30	-	40	-	50	60	.444 (11.3)	.129 (3.3)
All dimensions in millimeters																			
Parts available by special order only. 5,000 piece minimum.																			

539-4060 Sam
Get quote
Angic Global Solutions 1-888-872-0690
https://www.AngicGlobal.com Sales@AngicGlobal.com

C

NSE-2010
Slotted Counter Sunk
Oval Head Screw



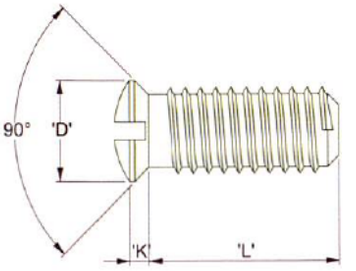

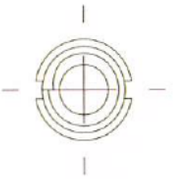

NSE-2010		Standard Pack: 1,000 per bag															
Mat'l: Nylon 6/6, RMS-179 Color: Natural	Thread	"L" Screw Length														"D"	"K"
NSE-2010-M3-L	M3	5	6	8	10	12	-	16	-	20	-	25	-	-	-	.216 (5.5)	.064 (1.65)
NSE-2010-M4-L	M4	-	6	8	10	12	15	-	-	20	-	25	30	-	-	.330 (8.4)	.106 (2.7)
NSE-2010-M5-L	M5	-	-	-	10	12	15	-	18	20	-	25	30	-	-	.366 (9.3)	.106 (2.7)
NSE-2010-M6-L	M6	-	-	8	10	12	15	-	-	20	22	25	30	40	50	.444 (11.3)	.129 (3.3)
All dimensions in millimeters																	
Parts available by special order only. 5,000 piece minimum.																	

NSE-34812
Cross Recessed
Oval Head Screw



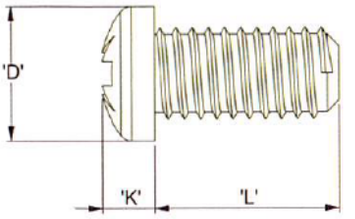

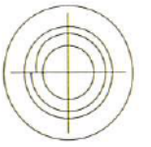

NSE-34812		Standard Pack: 1,000 per bag														
Mat'l: Nylon 6/6, RMS-179 Color: Natural	Thread	"L" Screw Length													"D"	"K"
NSE-34812-M3-L	M3	4	5	6	8	10	12	16	20	25	-	-	-	-	.220 (5.6)	.094 (2.4)
NSE34812-M4-L	M4	-	-	6	8	10	12	16	20	25	30	40	-	-	.314 (8)	.122 (3.1)
NSE-34812-M5-L	M5	-	-	6	8	10	12	16	20	25	30	40	50	-	.374 (9.5)	.145 (3.7)
NSE-34812-M6-L	M6	-	-	-	8	10	12	16	20	25	30	40	50	60	.472 (12)	.181 (4.6)
All dimensions in millimeters																
Parts available by special order only. 5,000 piece minimum.																

NWE
Nylon Washer

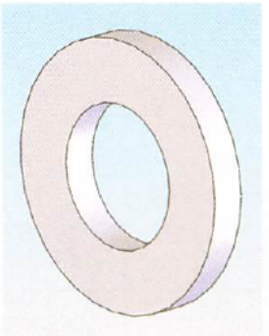

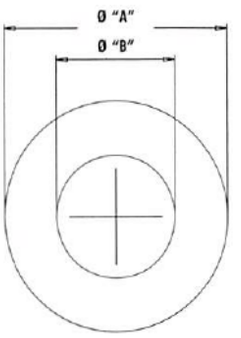



NWE-34815				Standard Pack: 1,000 per bag
Mat'l: Nylon 6/6, RMS-174 Color: Natural	Thread	Ø "A"	Ø "B"	"C"
NWE-34815-M2.5	M2.5	6.5	2.7	0.5
NWE-34815-M3	M3	7	3.2	0.5
NWE-34815-M4	M4	9	4.3	0.8
NWE-34815-M5	M5	10	5.3	1
NWE-34815-M6	M6	12	6.4	1.6
All dimensions in millimeters				
Parts available by special order only. 5,000 piece minimum.				

Features
- Used with screw and nut to distribute load

-800-621-1892
Get quote
Angic Global Solutions 1-888-872-0690
https://www.AngicGlobal.com Sales@AngicGlobal.com

HN
Hex Nut

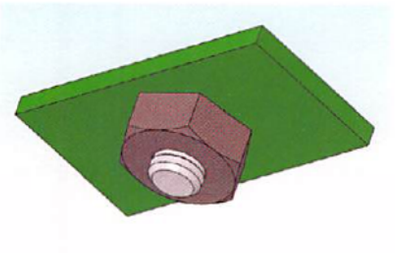

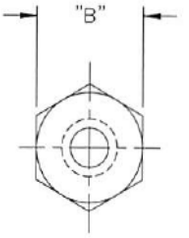

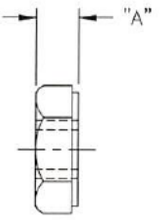

Material: See Chart Color: Natural				
Part No.	Standard Pack: 1,000 per bag			
	"A"	"B"	Material	Thread
*HN#4-40-01	.093 (2.3)	.245 (6.2)	Nylon 6/6 (RMS-01)	#4-40
HN#6-32-01	.110 (2.8)	.305 (7.7)	Nylon 6/6 (RMS-01)	#6-32
HN#8-32-01	.125 (3.2)	.338 (8.6)	Nylon 6/6 (RMS-01)	#8-32
HN-M3-79	.10 (2.5)	.22 (5.5)	Polycarbonate (RMS-79)	M3
HN-M4-01	.12 (3)	.27 (6.9)	Nylon 6/6 (RMS-01)	M4
HN-M4-79	.13 (3.3)	.31 (8)	Polycarbonate (RMS-79)	M4
HN-M6-01	.21 (5.4)	.39 (9.9)	Nylon 6/6 (RMS-01)	M6
*Part does not carry the washer face				

Features
- For use with Richco threaded products
- For applications requiring electrical insulation

KNF
Kwik Nut Fastener

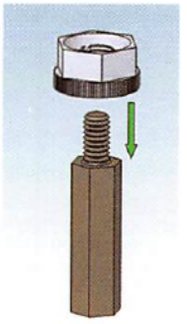

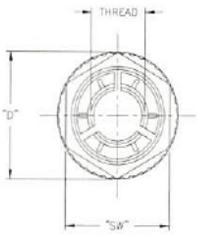

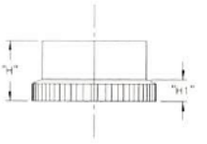

Material: Nylon 6/6, RMS-48 Color: Black					
Part No.	Standard Pack: 1,000 per bag				
	Thread	"SW"	"D"	"H"	"H1"
KNF-30	M3	.28 (7)	.32 (8.2)	.15 (4)	.06 (1.5)
KNF-40	M4	.32 (8)	.37 (9.4)	.19 (4.7)	.06 (1.5)

Features
- To press fit over a threaded stud. To install, push down the length of the threaded fastener to desired location and lock with a 180° turn
- To unscrew, remove with a wrench

NNE
Nylon Nuts

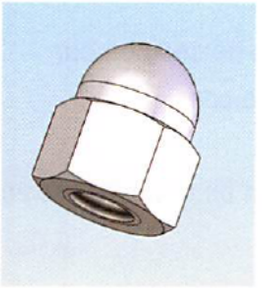

NNE-34814



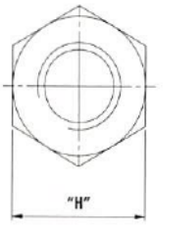

NNE-34814		Standard Pack: 1,000 per bag	
Mat'l: Nylon 6/6, RMS-174 Color: Natural	Thread	"M"	"H"
NNE-34814-M2	M2	1.6	4
NNE-34814-M2.5	M2.5	2	5
NNE-34814-M3	M3	2.4	5.5
NNE-34814-M4	M4	3.2	7
NNE-34814-M5	M5	4.2	8
NNE-34814-M6	M6	5	10
All dimensions in millimeters			
Parts available by special order only. 5,000 piece minimum.			

NNE-1587

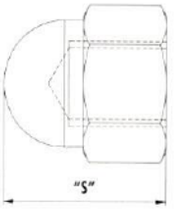



NNE-1587		Standard Pack: 1,000 per bag	
Mat'l: Nylon 6/6, RMS-174 Color: Natural	Thread	"S"	"H"
NNE-1587-M3	M3	6	5.5
NNE-1587-M4	M4	8	7
NNE-1587-M5	M5	10	8
NNE-1587-M6	M6	12	10
All dimensions in millimeters			
Parts available by special order only. 5,000 piece minimum.			

Features
- Domed style used for safety purposes

539-4060 Sam
Get quote
Angic Global Solutions 1-888-872-0690
https://www.AngicGlobal.com Sales@AngicGlobal.com

Notes

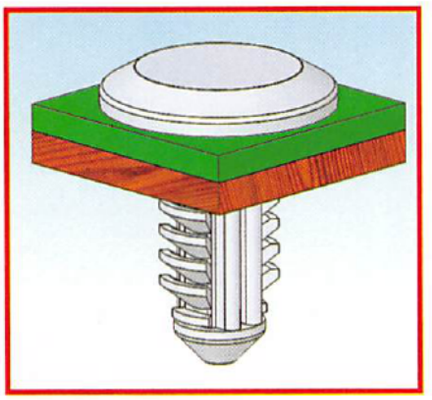

- Up-to-the minute product updates can be seen on our corporate web page at www.richco-inc.com
- Raw Material Specifications (RMS) can be found at the end of the catalog – pages 227-234
- Want to try a sample? Please call 1-800-621-1892

-800-621-1892
Get quote
Angic Global Solutions 1-888-872-0690
https://www.AngicGlobal.com Sales@AngicGlobal.com

General Features

Richco's range of rotary and axis dampers provide the white goods, audio & video entertainment, automotive and general electronics industries with a solution to dampening and providing controlled movement to give added value and functionality to the end user. Richco's rotary and axis dampers are available in different torques and mounting methods such as screw or snap-in mount.

Richco also provides door latches that act as a 'push/pull' locking and unlocking device enabling the door/compartment of your application to be securely closed and opened. Our door latch range also consists of a spring-assisted version.

Richco also supplies a number of molded rubber bumpers and rivet-fastened push-on feet for dampening or for taking light shock absorption on moving parts. Richco's bumpers and feet also secure and resist movement of your application when it is at rest. They also prevent surface damage with their anti-skid, scratch and stain/mark resistance properties. Richco's bumpers and feet come in different shapes, sizes, colors, hardness ratings and materials. If you cannot find a specific product in this section or require further technical details, please contact your local Richco office.

Typical Applications

• Automotive	Drink cup holders, ash trays, glove boxes
• Office Equipment	Photocopiers, computers, telephones
• Brown Goods/ Consumer Electronics	Hi-Fi cassette players, CD players, DVD players, TV set top boxes, TV input, output jack and manual control compartments, projection TV's
• White Goods	Washing machine soap dispensers, temperature control compartments in refrigerators, boiler control panels, microwaves
• Furniture	Sliding doors, storage units, chairs
• Telecommunications	Distribution racks and panels
• Medical Equipment	Monitoring equipment
• General Electronic	Electronic cabinets

Materials

Most of Richco's Rotary & Axis Dampers and Bumpers & Feet come in the following materials.

Rotary & Axis Dampers

Material	Flammability Rating	RoHS Compliance	RMS
Polycarbonate	V2	Yes	161
Acetal	NR	Yes	160

Bumpers & Feet

Material	Flammability Rating	RoHS Compliance	RMS
Elastomer	HB	Yes	158
Polyurethane	HB	Yes	64
PVC	NR	Yes	25
ABS	HB	Yes	114

For more details on material properties please consult the materials data section (RMS) of the catalog. If you require a part to be in a different material than those highlighted in this section, please contact your local Richco office to discuss your requirements.

Introduction

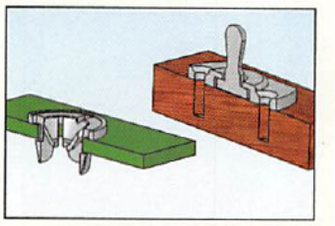

Catch & Striker

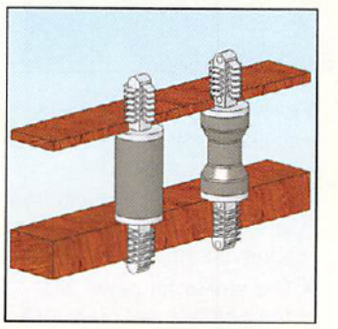

Vibration Dampers

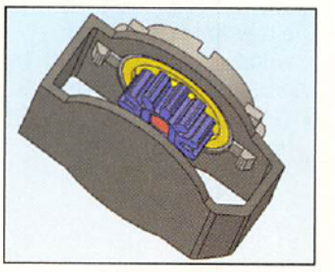

Snap In Rotary Dampers

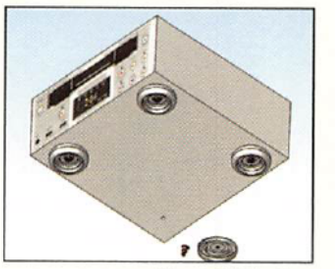

Shock & Vibration Dampening Feet

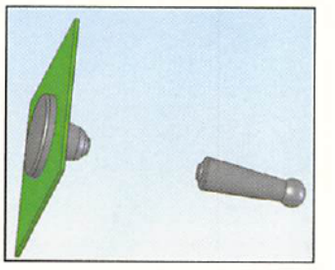

Bumpers

D

39-4060 Samp
ANGIC
Get quote
Angic Global Solutions 1-888-872-0690
https://www.AngicGlobal.com Sales@AngicGlobal.com

CS
Catch & Striker

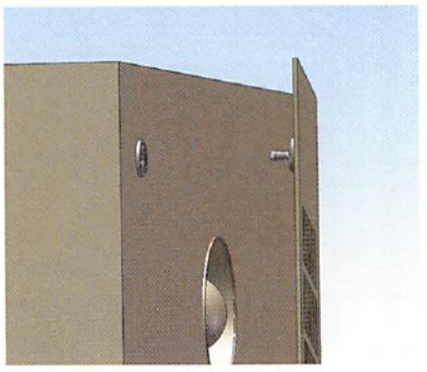

Average Insertion & Extraction Data for the CS Series				
	CS-113-1		CS-113-4	
	Insertion (N)	Extraction (N)	Insertion (N)	Extraction (N)
CS-113-2	34	22	12	11
CS-113-5	24	64	16	38

D

Features

- Quick installation whenever latching is needed
- Striker is mounted with the striker base (CS-113-3) and screwed into the door
- The striker engages with the catch to securely lock the door
- The catch is designed either for mounting in wood cabinets (CS-113-1) or into a panel (CS-113-4)
- The striker can be released from the catch with relatively little pull effort

CS-113-1	CS-113-4	CS-113-2	CS-113-5	CS-113-3
Blind Hole Catch	**Catch**	**Striker**	**Striker**	**Base**
Mat'l: Supertough Nylon 6/6, RMS-73 Color: Black	**Mat'l: Nylon 6, RMS-159 Color: Natural**	**Mat'l: Supertough Nylon 6/6, RMS-73 Color: Black**	**Mat'l: Nylon 6/6, RMS-01 Color: Natural**	**Mat'l: Acetal, RMS-39 Color: Black**
To press-fit into a .551 ± .003 (14 ± 0.08) dia. Hole, in a .394 (10) min. thick board of compliant material (i.e. wood, fiberboard, etc.)	To snap-lock in a .551 ± .003 (14 ± 0.08) dia. Hole, in a .125 (3.2) nom. panel thickness.	Mounted with the use of CS-113-3	Mounted with the use of CS-113-3 Black color available by special order.	Use #4, #5 or M3 countersunk screw to mount
Standard Pack: 500 per bag				

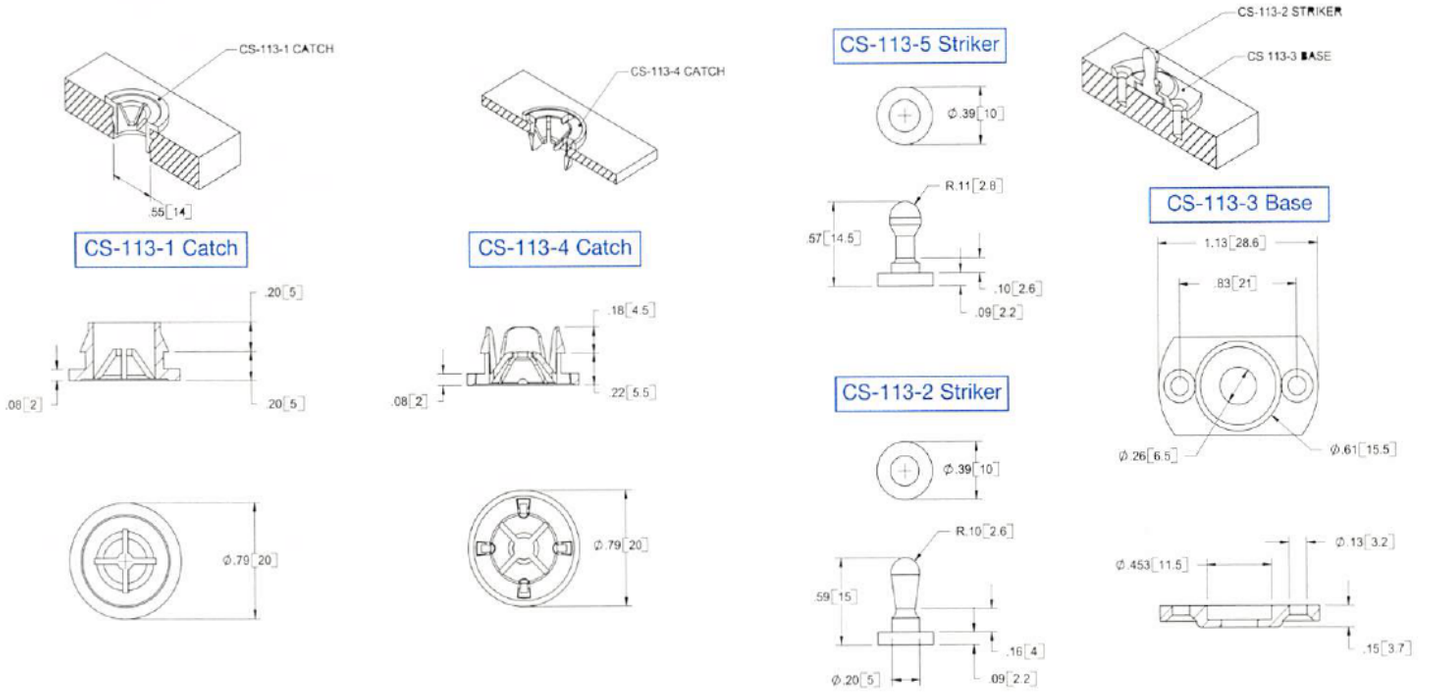

1-800-621-189
Get quote
Angic Global Solutions 1-888-872-0690
https://www.AngicGlobal.com Sales@AngicGlobal.com

DCS
Metal & Plastic Catch & Striker

NEW

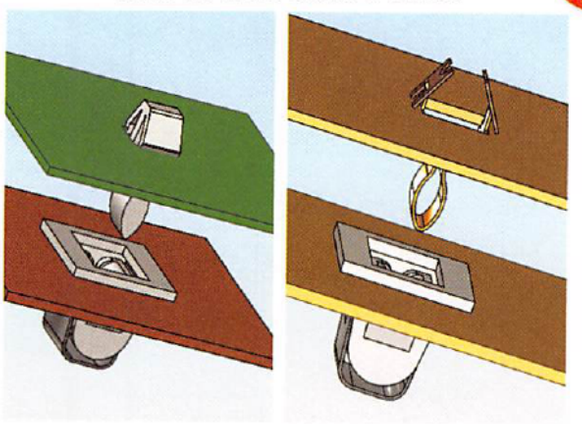

Fig. 1

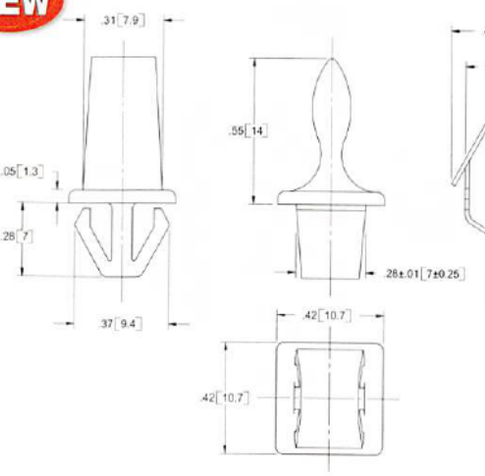

Fig. 2

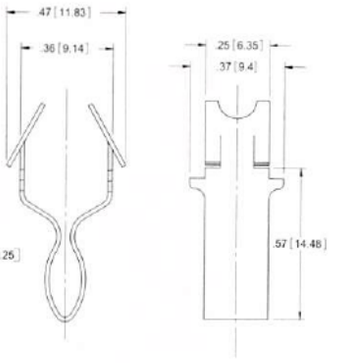

DCS-1 (Fig. 1)	DCS-4 (Fig. 2)	DCS-7 (Fig. 3)
Plastic Striker	Metal Striker	Catch Assembly
Mat'l: POM, RMS-14 Color: Natural	Mat'l: Plated Steel, RMS-212 Color: Dichromate Plated Finish, RMS-272	Mat'l: Catch: Nylon 6/6, RMS-01 Color: Natural. Metal Clip: Plated Steel, RMS-212
To snap lock into a .287 (7.29) square hole, .032-.052 (0.81-1.32) panel thickness.	To snap lock into a .287 (7.29) square hole, .032-.052 (0.81-1.32) panel thickness.	To snap lock into a .515 x .655 (13.08 x 16.64) rectangular hole, in a .035-.062 (0.89-1.57) panel thickness.
Standard Pack: 500 per bag		

Fig. 3

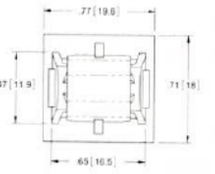

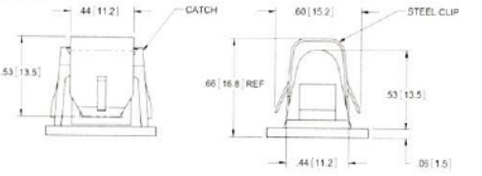

DL-1
Door Latch

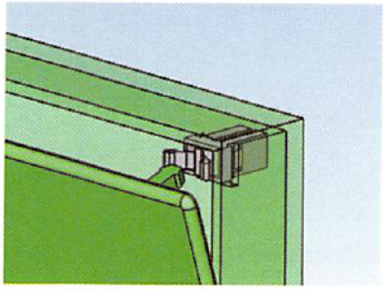

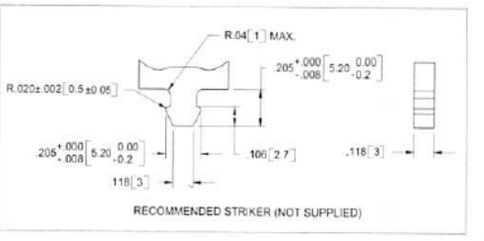

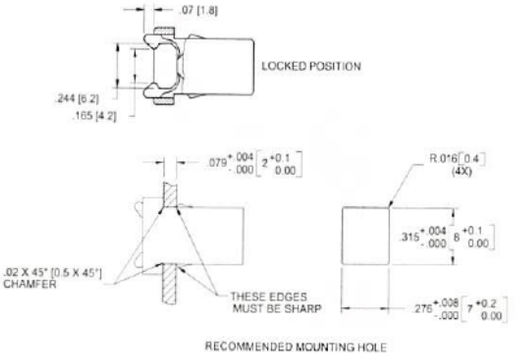

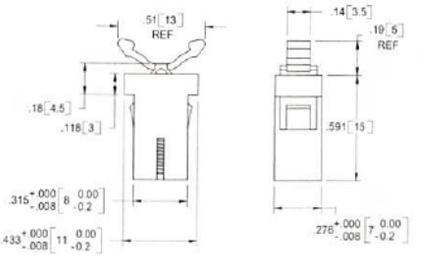

Features

- Used for locking and unlocking doors
- Door lock engages a striker (not supplied by Richco) to lock the door into place. Simply press on the door to un-latch the striker and unlock the door

DL-1
Mat'l: Acetal, RMS-121 Color: Black Standard Pack: 500 per bag
Audible Lock and Release
Supplied in released position
Locking Stroke = .12 (5.4)
Release Stroke = .05 (1.3)
Locking Stroke Force = 16 oz. ± 6.3 oz. (500 gr. ± 200 gr.)
Retention Force (Locked) = 32.2 oz. (1 kg.) Min.
Continuous Working Temperature = 14 to 140°F (-10 to 60°C)
Storage Temperature = -40 to 176°F (-40 to 80°C)
All values for reference only

ANGIC GLOBAL SOLUTIONS
Get quote
Angic Global Solutions 1-888-872-0690
https://www.AngicGlobal.com Sales@AngicGlobal.com

FQT
Quarter Turn Panel Fastener

NEW

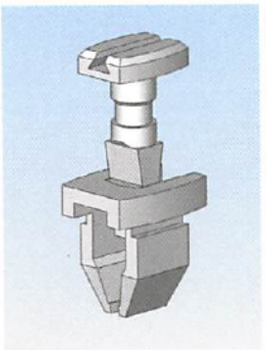

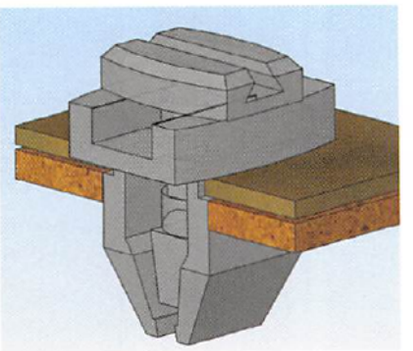

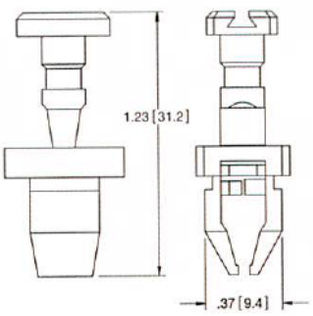

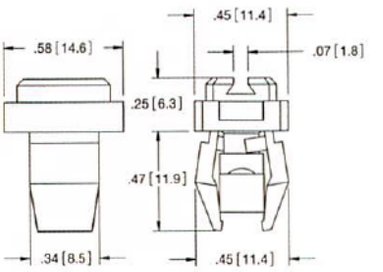

D

Features

- Quick way to join a removable panel from a fixed panel
- Economical one piece design
- Easily installed by driving the plunger into the grommet with a hammer locking the two panels together
- Panels are easily separated using a screwdriver to rotate the plunger a quarter turn

FQT-1
Mat'l: Acetal: RMS-14 Color: White
Standard Pack: 1,000 per bag

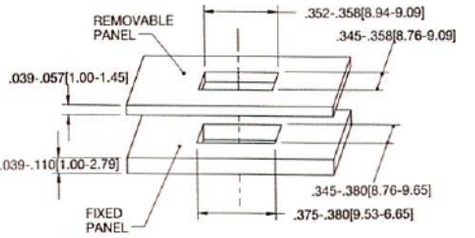

SLG/SLPL/SLPB
Snap Latch

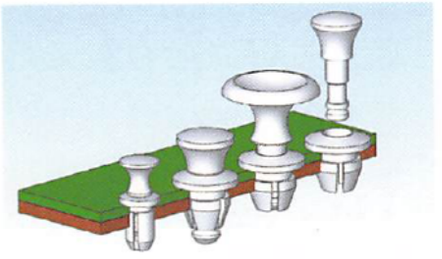

Part No. Examples			
Grommet Part No.	Dash	Style	Color
SLG	-	SL	B
Plunger Part No.	Dash	Style	Color
SLPL	-	1L	W

Features

- Quick installation wherever latching is needed
- To install, push the grommet into the removable panel and then the desired plunger into the grommet. When the panel and plunger are pushed into the fixed panel, it locks them together
- Simply pull on the plunger to remove the non-fixed panel

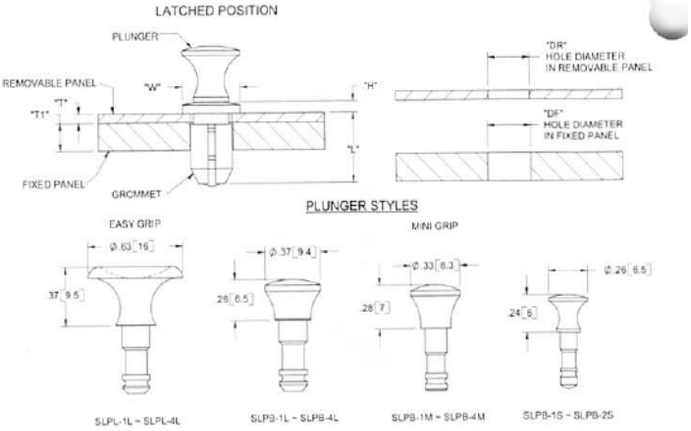

SL		Plunger Mat'l: Nylon 6, RMS-120		Grommet Mat'l: Polycarbonate, RMS-72		Plunger and mating grommet sold separately.			Standard Pack: 1,000 per bag		
Grommet Part No.	Grommet Style	"W" ± .012 (±0.3)	"H" ± .008 (±0.2)	"L" Ref.	Removable Panel Thickness "T" Max.	Total Panel Thickness "T1" Min. - Max.	Removable Panel Hole Dia. Range "DR"	Fixed Panel Hole Dia. Range "DF"	Mating Plunger Part No.	Alternate Mating Plunger Part No.	Plunger Style
SLG	SL	.425 (10.8)	.079 (2)	.339 (8.6)	.043 (1.1)	.056 - .145 (1.5 - 3.7)	.295 - .303 (7.5 - 7.7)	.315 - .323 (8 - 8.2)	SLPL	SLPB	1L
	1L			.354 (9)	.063 (1.6)	.079 - .165 (2 - 4.2)					2L
	2L			.394 (10)	.098 (2.5)	.118 - .205 (3 - 5.2)					3L
	3L			.461 (11.7)	.161 (4.1)	.181 - .272 (4.6 - 6.9)					4L
	4L			.508 (12.9)	.209 (5.3)	.228 - .315 (5.8 - 8)					1M
	1M	.425 (10.8)	.425 (10.8)	.315 (8)	.043 (1.1)	.056 - .146 (1.5 - 3.7)	234 - .240 (5.95 - 6.1)	.250 - .256 (6.35 - 6.5)	SLPB	Not Available	2M
	2M			.335 (8.5)	.063 (1.6)	.079 - .165 (2 - 4.2)					3M
	3M			.374 (9.5)	.098 (2.5)	.118 - .205 (3 - 5.2)					4M
	4M			.433 (11)	.161 (4.1)	.181 - .272 (4.6 - 6.9)					1S
	1S	.256 (6.5)	.047 (1.2)	.299 (7.6)	.039 (1)	.079 - .158 (2 - 4)	.177-.181 (4.5-4.6)	.185-.189 (4.7-4.8)			2S
	2S			.319 (8.1)	.059 (1.5)	.098 - .177 (2.5 - 4.5)					
Color: Black or White. To order, add suffix "B" or "W" to part number											

1-800-621-1892
Get quote
Angic Global Solutions 1-888-872-0690
https://www.AngicGlobal.com Sales@AngicGlobal.com

HSCBS/VD
Vibration and Shock Dampening Spacers

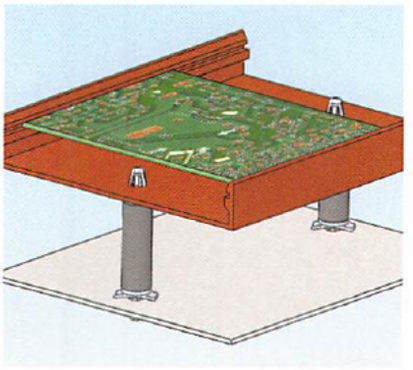

Patents Pending

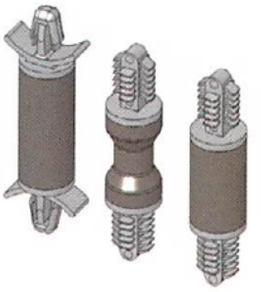

Features
- The flexible wings on the HSCBS series provide extra shock and vibration protection
- Select the appropriate "B" length for your required level of protection
- VD Series blind hole ends provide rigid mounting

D

Standard Pack: 1,000 per bag			Fix Mat'l: Flame Ret. Nylon 6/6, RMS-169 Color: Natural		
Part No.	"A" ± .03 (0.8) Uncompressed	"B" Ref.	Standoff Material Color: Black	Target Load	Fig.
VD-2	.73 (18.5)	.62 (16.3)	TPE, RMS-167	1.0 lbf (4.4N)	1
VD-3	.97 (24.7)	.87 (22)			
VD-4	1.21 (30.7)	1.10 (28)			
VD-5	.49 (12.4)	.38 (9.7)		1.6 lbf (7.1N)	2
VD-6	.73 (18.5)	.62 (16.3)			
VD-7	.97 (24.7)	.87 (22)			
VD-8	1.21 (30.7)	1.10 (28)			
HSCBS-1	.59 (14.9)	.38 (9.7)	TPE, RMS-168	2.2 lbf (9.8N)	3
HSCBS-2	.83 (21)	.62 (16.3)			
HSCBS-3	1.07 (27.1)	.87 (22)			
HSCBS-4	1.31 (33.2)	1.10 (28)			

Top Hole: Press-fit: .250 ± .003 (6.35 ± 0.08)
Panel Thickness: .07 - .31 (1.8 -7.9)

Fig. 1

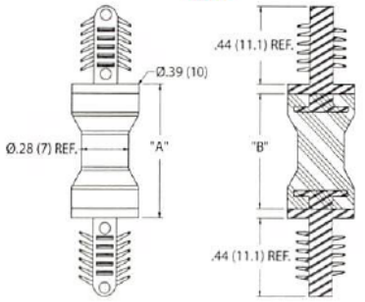

Fig. 2

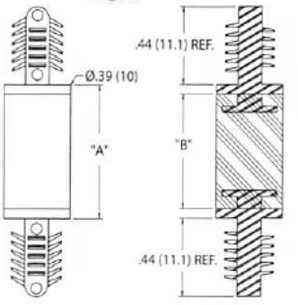

Top Hole: Snap-lock: .187 ± .003 (4.75 ± 0.08)
Panel Thickness: .031 - .078 (0.79 - 1.98)

Fig. 3

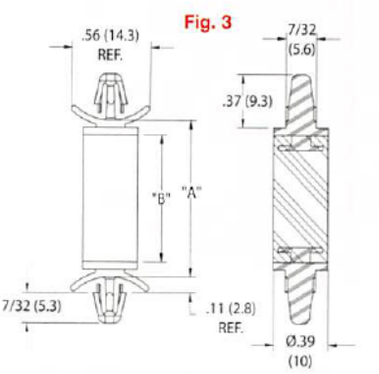

Bottom Hole: Press-fit: .250 ± .003 (6.35 ± 0.08)
Panel Thickness: .07-.31 (1.8 - 7.9)

Bottom Hole: Snap-lock: .187 ± .003 (4.75 ± 0.08)
Panel Thickness: .031 - .078 (0.79 - 1.98)

539-4060 Samp
Get quote
Angic Global Solutions 1-888-872-0690
https://www.AngicGlobal.com Sales@AngicGlobal.com

VG
Vibration Grommet

NEW

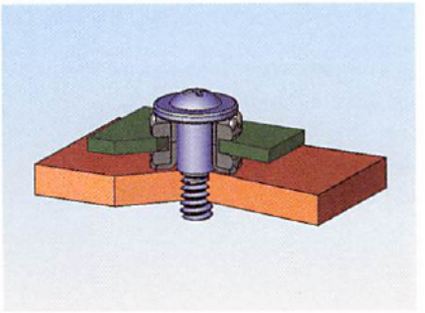

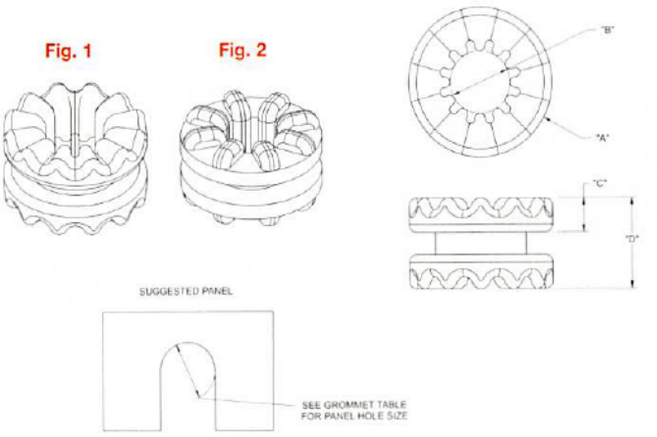

D

Features
- Unique rib design maximizes absorption
- Controls noise and vibration
- VGS Series, Vibration Grommet Screws are also available

Material: Neoprene Rubber, RMS-190 Color: Black							
Standard Pack: 1,000 per bag							
Part No.	Dim. "A" ±.010	Dim. "B" ±.010	Panel Thickness	Panel Hole Size	Dim. "C"	Dim. "D"	Fig.
VG-1	.380 (9.7)	.158 (4)	.057 ± .006 (1.45 ± 0.15)	.250 ± .005 (6.35 ± 0.13)	.087 (2.2)	.231 (5.9)	1
VG-2	.565 (14.4)	.188 (4.8)	.063 ± .006 (1.60 ± 0.15)	.375 ± .005 (9.53 ± 0.13)	.131 (3.3)	.324 (8.2)	1
VG-3	.380 (9.7)	.158 (4)	.031 ± .003 (0.79 ± 0.08)	.250 ± .005 (6.35 ± 0.13)	.100 (2.5)	.231 (5.9)	1
VG-4	.565 (14.4)	.188 (4.8)	.043 ± .004 (1.09 ± 0.1)	.375 ± .005 (9.53 ± 0.13)	.141 (3.6)	.324 (8.2)	1
VG-5	.374 (9.5)	.142 (3.6)	.055 ± .006 (1.4 ± 0.15)	.217 ± .005 (5.5 ± 0.13)	.083 (2.1)	.217 (5.5)	2

TCS
Touch Control Spacer

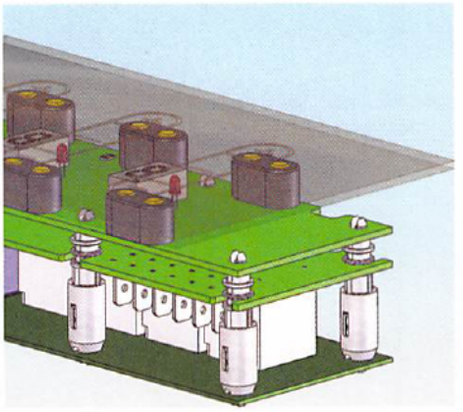

Patent Pending.

Top Hole: Snap-lock: .165 ± .002 (4.2 ± 0.05)
Panel Thickness: .063 ± .002 (1.6 ± 0.05)

TCS	Standard Pack: 500 per bag		
Color: Natural	"A"	Spacer Material	Spring Material
TCS-1	.21	Nylon 6/6, RMS-01	Mild Steel S300 Pb, RMS-230
TCS-2	(5.4)	Nylon 6/6, RMS-19	
TCS-3	.17	Nylon 6/6, RMS-01	
TCS-4	(4.2)	Nylon 6/6, RMS-19	
Travel: .12 (3)			

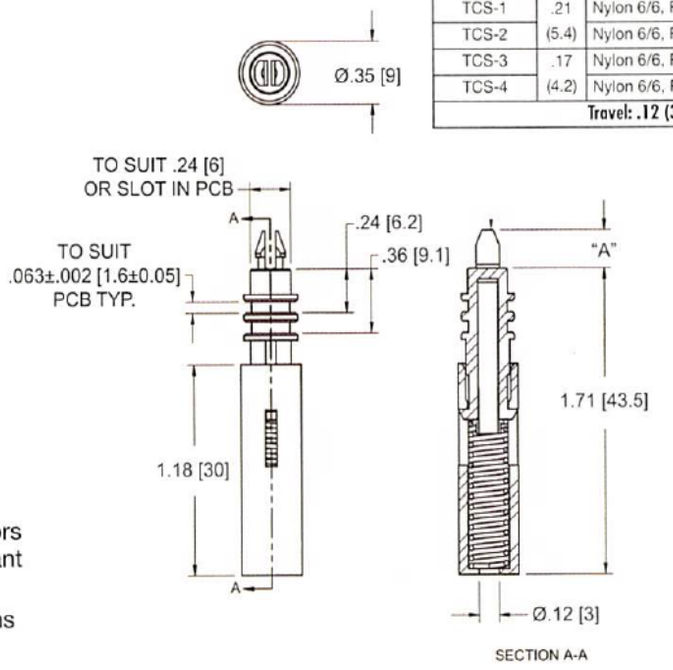

Bottom Hole: To locate over a vertical tab

Features
- Spring provides continuous force to light sensors mounted onto a PCB so that they are in constant contact with the cover
- Other spring forces, mounts, and spacer lengths available by special order

ANGIC GLOBAL SOLUTIONS
Get quote
Angic Global Solutions 1-888-872-0690
https://www.AngicGlobal.com Sales@AngicGlobal.com

QM
Vibration Mount

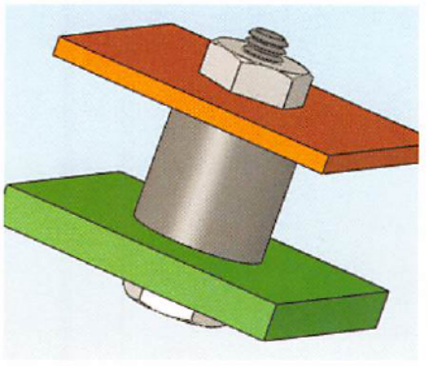

Fig. 1

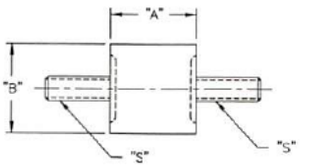

Fig. 2

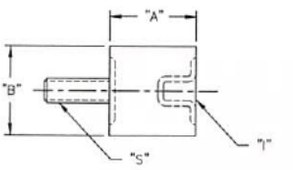

Features

- The rubber center provides vibration dampening and shock control for electronic components
- For use in high load applications

QM			Standard Pack: 100 per bag			
Mat'l: Spacer: Neoprene Rubber 40 Durometer, RMS-241 Color: Black; Insert/Studs: 1010-1020 Steel, RMS-242, Plating: Yellow Chromate over Zinc Plate, RMS-274	"A" ± .020 (0.5)	"B" ± .020 (0.5)	Stud Thread "S"	Insert Thread "I"	Fig.	Target Load at 10% Compression
QM1	7/16 (11.1)	7/16 (11.1)	#6-32 x 1/4	—	1	15 lbf (67 N)
QM1T				#6-32 x 3/16	2	
QM2T			#6-32 x 1/2	#6-32 x 3/16	2	
QM3	1/2 (12.7)		#8-32 x 3/8	—	1	17 lbf (77 N)
QM3T				#8-32 x 3/16	2	
QM4		9/16 (14.3)		—	1	
QM4T				#8-32 x 3/16	2	
QM5	3/4 (19.1)	1.0 (25.4)	#1/4-20 x 1/2	—	1	26 lbf (115 N)
QM7	9/16 (14.3)	1/2 (12.7)	#10-32 x 3/8	—	1	19 lbf (86 N)
QM7T				#10-32 x 3/16	2	
Threaded metal insert "I" may be blind clip, or through-nut.						

SDD
Metric Vibration Mount

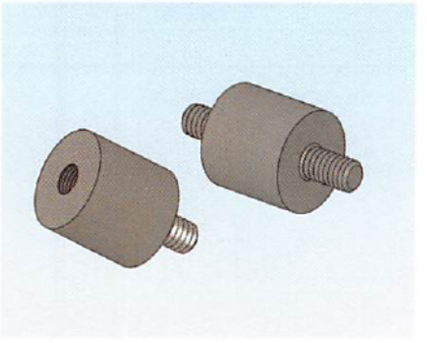

SDD			Standard Pack: 100 per bag				
Mat'l: Spacer: Natural Rubber Shore 55A, RMS-207 Color: Black; Insert/Studs: Steel ST37 Galvanized, RMS-266	"D" mm	"H" mm	Thread	Stud Thread "S" mm	Insert Thread "I" mm	Fig.	Target Load at 10% Compression
SDD-DII-13-26-M4	13	26	M4	—	4	3	43 lbf (190 N)
SDD-DAA-15-8-M4	15	8	M4	10	—	1	13 lbf (59 N)
SDD-DAA-15-15-M4	15	15	M4	13	—	1	25 lbf (109 N)
SDD-DIA-15-15-M4	15	15	M4	13	4	2	
SDD-DII-15-15-M4	15	15	M4	—	4	3	
SDD-DAA-15-30-M4	15	30	M4	16	—	1	49 lbf (219 N)
SDD-DIA-15-30-M4	15	30	M4	16	4	2	
SDD-DAA-20-25-M6	20	25	M6	19	—	1	41 lbf (183 N)
SDD-DIA-20-25-M6	20	25	M6	19	6	2	
SDD-DII-20-25-M6	20	25	M6	—	6	3	
SDD-DAA-25-10-M6	25	10	M6	18	—	1	16 lbf (73 N)
SDD-DAA-25-15-M6	25	15	M6	18	—	1	25 lbf (109 N)
SDD-DIA-25-15-M6	25	15	M6	18	6	2	
SDD-DAA-25-20-M6	25	20	M6	18	—	1	33 lbf (146 N)
SDD-DIA-25-20-M6	25	20	M6	18	6	2	
SDD-DIA-25-30-M6	25	30	M6	18	6	2	49 lbf (219 N)
SDD-DAA-30-20-M8	30	20	M8	20.5	—	1	33 lbf (146 N)
SDD-DIA-30-20-M8	30	20	M8	20.5	8	2	
SDD-DII-30-20-M8	30	20	M8	—	8	3	
Available by special order; 1,000 piece minimum. Other sizes may also be available.							

Fig. 1

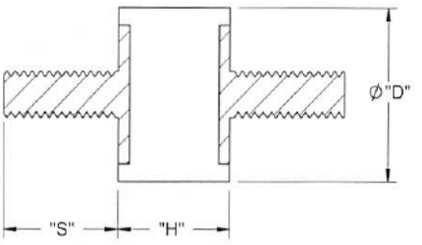

DAA

Fig. 2

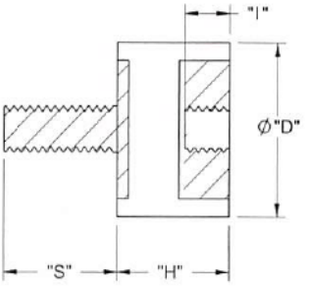

DIA

Fig. 3

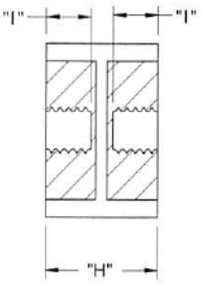

DII

539-4060 Sam
Get quote
Angic Global Solutions 1-888-872-0690
https://www.AngicGlobal.com Sales@AngicGlobal.com

RFRT-G

Two Way Rotary Damper

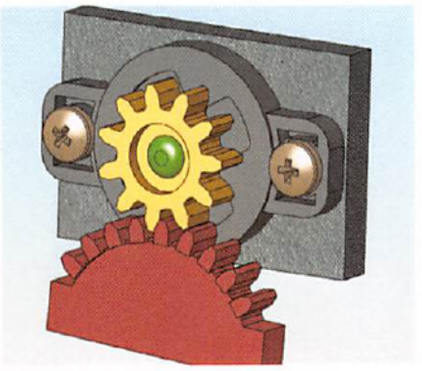

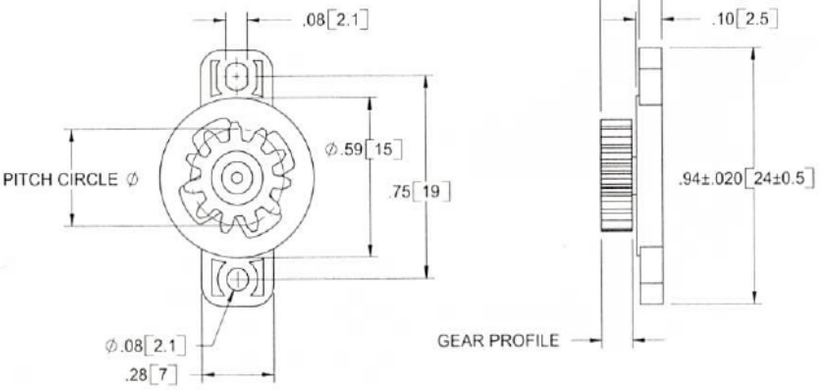

D

Features

- Dampers provide resistance and slow the movement of applications in which hinged devices open and close such as access panels, doors and ash trays
- They utilize the principle of fluid resistance to dampen movement
- Available with different gears and torque/resistance values

GEAR SPECIFICATION			
GEAR*	1	2	3
Type	Standard Spur	Standard Spur	Standard Spur
Tooth Profile	Involute Gear	Involute Gear	Involute Gear
Pressure Angle	20°	20°	20°
No. of Teeth	14	10	11
Pitch Circle Dia.	Ø .28 (7)	Ø.39 (10)	Ø.35 (8.8)
Gear Profile	.15 (3.7)	.12 (3)	.14 (3.6)
Total Profile	.26 (6.6) Ref.	.23 (5.9) Ref.	.26 (6.5) Ref.

Material: Body and Cap - UL94 HB Polycarbonate, RMS-161; Rotating Shaft and Gear - UL94 HB Polyoxymethylene, RMS-160; Color: Black	
Part No.	Standard Pack: 1,000 Torque (gf.cm) @20 RPM & 23°C
RFRT-G2-200-G*	20 ± 7
RFRT-G2-300-G*	30 ± 8
RFRT-G2-450-G*	45 ± 10
RFRT-G2-600-G*	60 ± 12
RFRT-G2-101-G*	100 ± 20

RFRT-PN

Two Way Rotary Damper

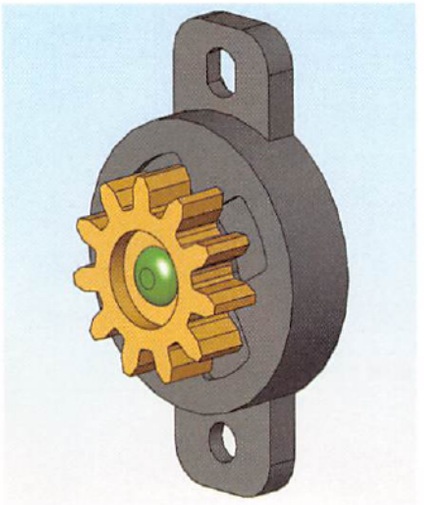

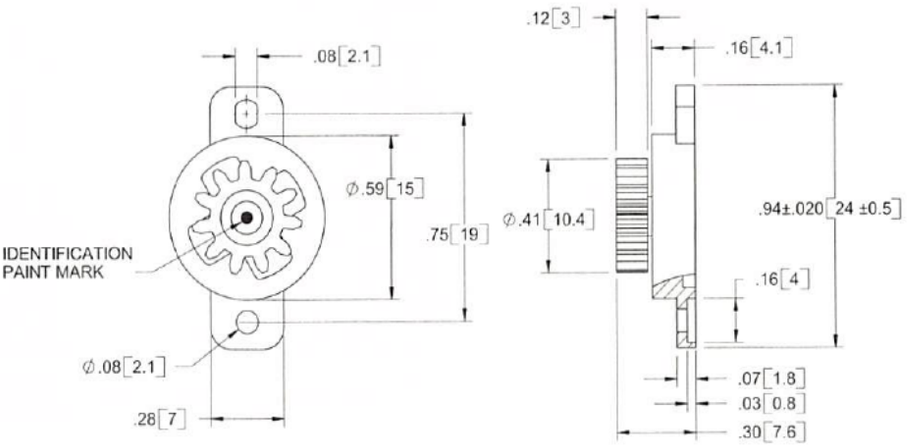

GEAR SPECIFICATIONS	
Type	Standard Spur
Tooth Profile	Involute Gear
Pressure Angle	20°
Number of Teeth	11
Pitch Circle Diameter	Ø.35 (8.8)

Material: Body and Cap - UL94 HB Polycarbonate, RMS-161; Rotating Shaft and Gear - UL94 HB Polyoxymethylene, RMS-160; Color: Black		
Part No.	Standard Pack: 1,000	
	Torque (gf.cm) @20 RPM & 23°C	Identification Paint Mark, RMS-239
RFRT-PN3	25 ± 5	White
RFRT-PN4	40 ± 10	Yellow
RFRT-PN6	60 ± 12	Blue
RFRT-PN5	80 ± 15	Green
RFRT-PN7	130 ± 26	Pink

800-621-1892
ANGIC
Get quote
Angic Global Solutions 1-888-872-0690
https://www.AngicGlobal.com Sales@AngicGlobal.com

RFRT-D2

Rotary Damper
Two-Way High-Torque

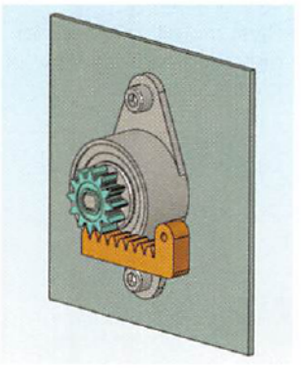

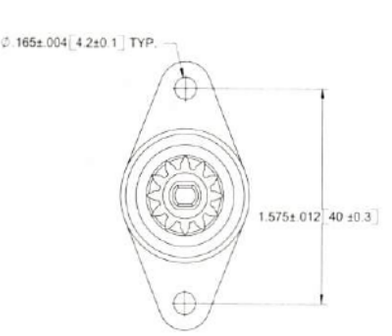

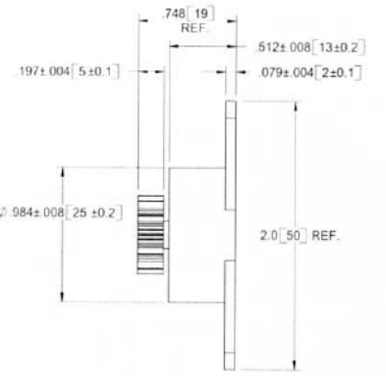

RFRT-D2	Standard Pack: 100 per bag
Mat'l: Body Polycarbonate, RMS-161 Color: Black. Gear and Shaft: Acetal, RMS-160 Color: Blue	Torque (gf. cm) @ 20 RPM ± 23°
RFRT-D2-102-G2	1,000 ± 200
RFRT-D2-152-G2	1,500 ± 300

GEAR SPECIFICATIONS	
Type	Standard Spur
Tooth Profile	Involute Gear
Pressure Angle	20°
No. of Teeth	12
Pitch Circle Diameter	Ø .47 (12)

D

RFRT-G-CLIP

Snap In Rotary Damper

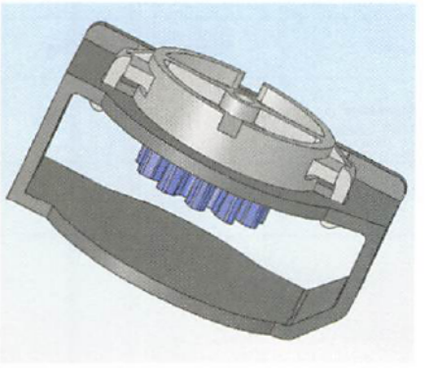

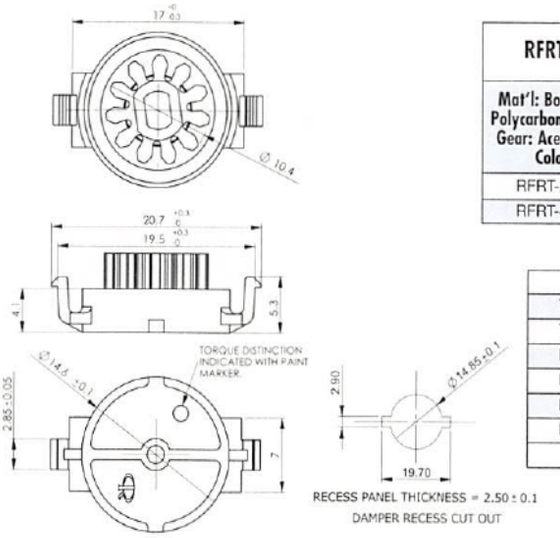

RFRT-G-CLIP	Standard Pack: 1,000 per bag	
Mat'l: Body and Shaft: Polycarbonate, RMS-161 Gear: Acetal, RMS-160 Color: Black	Torque (gf. cm) @ 20 RPM ± 23°	Identification Paint Mark RMS-239
RFRT-20G-CLIP	20 ± 7	Yellow
RFRT-40G-CLIP	40 ± 10	White

GEAR SPECIFICATIONS	
Type	Standard Spur
Tooth Profile	Involute Gear
Module	0.8
Pressure Angle	20°
No. of Teeth	11
Pitch Circle Diameter	8.8
All dimensions in mm	

Features

- Easily snaps into housing, eliminating the need for screws

RAD-20

Axis Damper

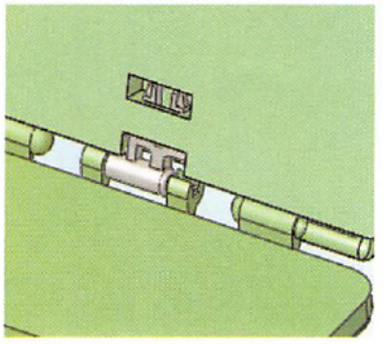

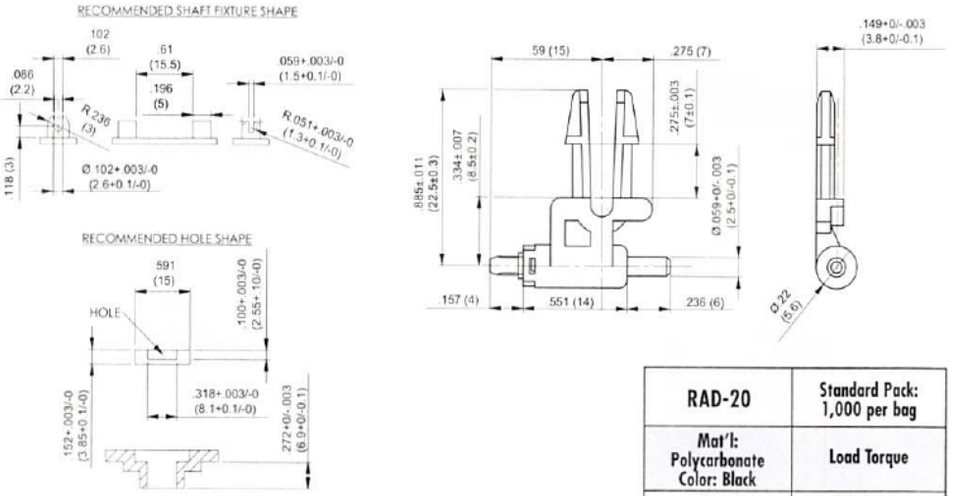

RAD-20	Standard Pack: 1,000 per bag
Mat'l: Polycarbonate Color: Black	Load Torque
RAD-20	20 gf. cm
Revolution Angle = 90°	
Max. Revolution Angle = 130° ± 10°	
All dimensions in mm	

Features

- Damper snaps into the access panel/door (see Recommended Shaft Fixture Shape) and the recommended mounting shape in the chassis (see Recommended Hole Shape)
- Eliminates the need for separate rack & spring system commonly used in rotary damper applications
- Spring loaded to give a pre-force to aid in opening the access panel/doors

ANGIC GLOBAL SOLUTIONS
Get quote
Angic Global Solutions 1-888-872-0690
https://www.AngicGlobal.com Sales@AngicGlobal.com

SVF-1

Shock & Vibration Dampening Foot

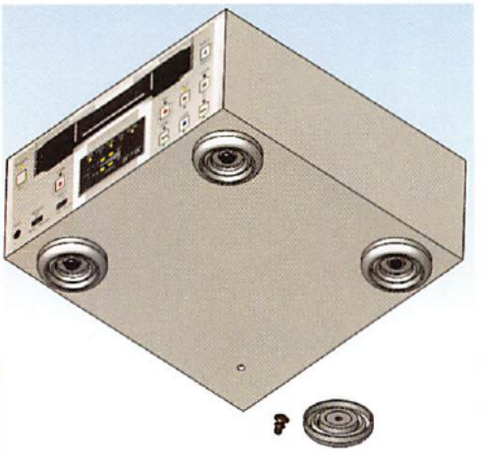

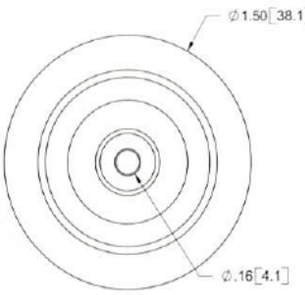



Features

- Provides shock and vibration protection and skid resistance
- Rivet mounting allows for mounting onto a variety of panel thicknesses

SVF-1	Standard Pack: 1,000 per bag
Mat'l: Thermoplastic elastomer, RMS-158 Color: Black	Richco Snap Rivet Sold Separately See page 52
Panel Thickness Range	**Use With**
.012 - .051 (0.3 - 1.3)	SR-4050
.051 - .091 (1.3 - 2.3)	SR-4060
.091 - .130 (2.3 - 3.3)	SR-4070
.130 - .169 (3.3 - 4.3)	SR-4080

BF

Big Foot

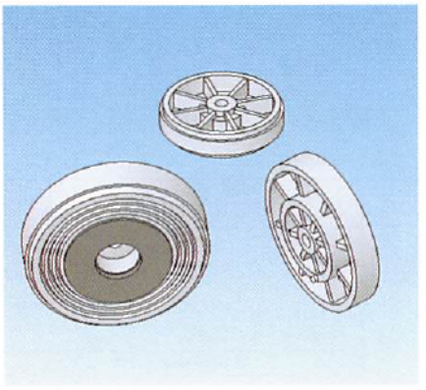

BF		Mounting screw not supplied		Standard Pack: 100 per bag	
Part No.	**Foot Material**	**Cushion Material**	**Recommended Mounting Screw**	**Load Capacity**	**Color**
BF-1001 BF-1002 BF-1005	ABS, RMS-114	Nylon Fiber, RMS-240	#8 or M4 Pan Head	22 lbs. (10 kg.)	Black

Features

- Felt bottom allows the component they are mounted on to "skid"

BF-1001

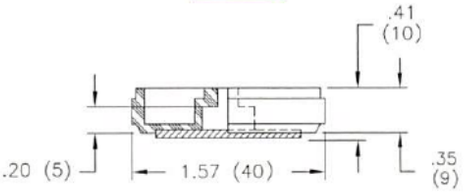

BF-1002

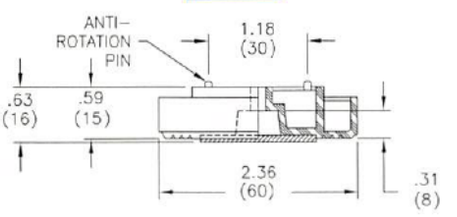

BF-1005

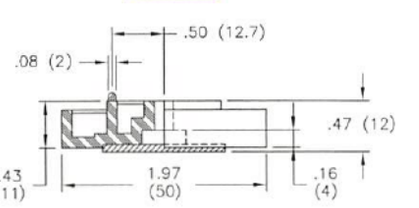

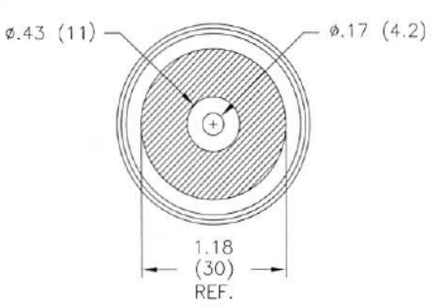

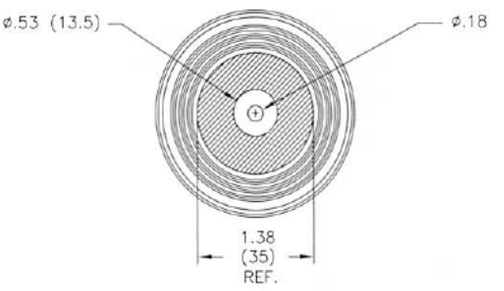

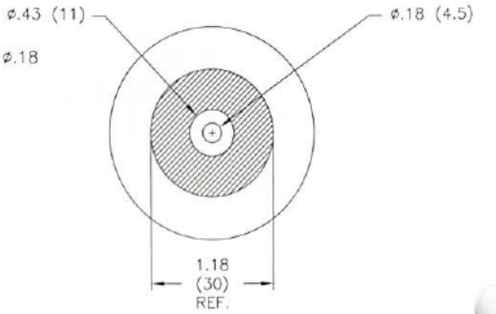

1-800-621-1892
Get quote
Angic Global Solutions 1-888-872-0690
https://www.AngicGlobal.com Sales@AngicGlobal.com

TB
Threaded Insert Bumper

NEW

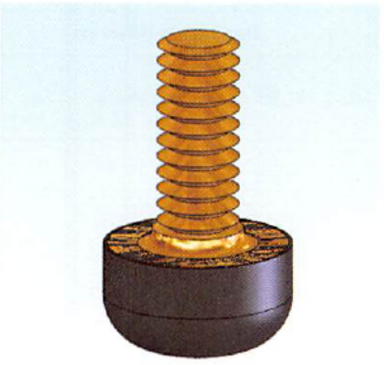

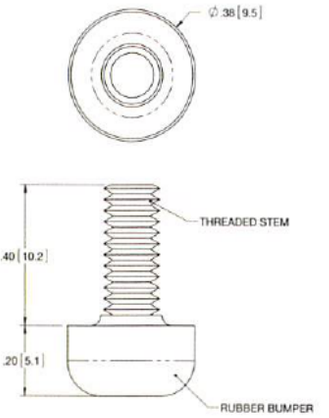

Features

- Bumper is made of high loss factor material for vibration control and durability
- Threaded stud is easy to install and remove
- Rigid brass stud provides strong hold

Material: Rubber Bumper: IIR, Shore 40 Durometer, RMS-348 Threaded Stem: Brass, RMS-349 Color: Black	
Standard Pack: 100 per bag	
Part No.	**Thread Type**
TB-1	#6-32
TB-2	#8-32
TB-3	M3
TB-4	M4

D

SOF
Screw on Feet

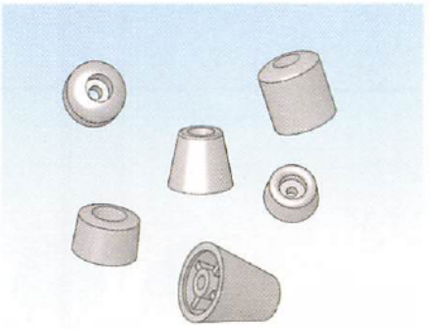

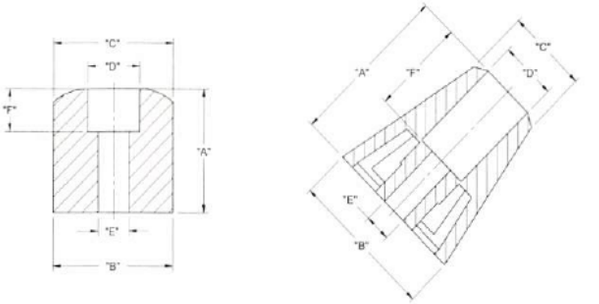



STYLE 1 STYLE 2

Features

- Ideal for mounting with screws
- Excellent slip resistance

Material: Neoprene Rubber, RMS-290 Color: Black					Standard Pack: 1,000 per bag		
Part No.	**"A"**	**Ø "B"**	**Ø "C" REF.**	**Ø "D"**	**Ø "E"**	**"F"**	**Style**
SOF-15129	.28 (7.1)	.63 (15.9)	.54 (13.8)	.31 (8)	.13 (3.2)	.16 (4)	1
SOF-15140	.37 (9.5)	.69 (17.5)	-		.16 (4)	.20 (5.2)	2
SOF-15125	.45 (11.5)	.75 (19.1)	.71 (18)	.40 (10.2)	.20 (5)	.25 (6.35)	1
SOF-15111	.60 (15.25)	.75 (19)	.50 (12.7)	.31 (8)	.16 (4)	.19 (4.8)	2
SOF-15127	.72 (18.35)	.73 (18.5)	-		.19 (4.8)	.25 (6.35)	1
SOF-15126	.98 (25)	.89 (22.5)	.50 (12.7)	.34 (8.7)	.16 (4)	.57 (14.5)	2

539-4060 Sam

ANGIC GLOBAL SOLUTIONS Get quote

Angic Global Solutions 1-888-872-0690
https://www.AngicGlobal.com Sales@AngicGlobal.com

FF
Fast Foot

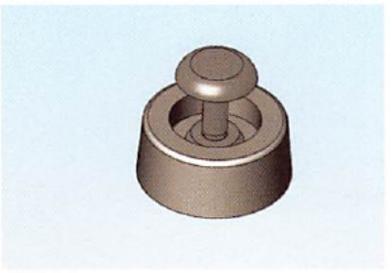

Fig. 1

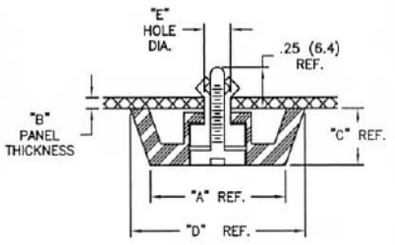

WITH DRIVE SCREW

Fig. 2

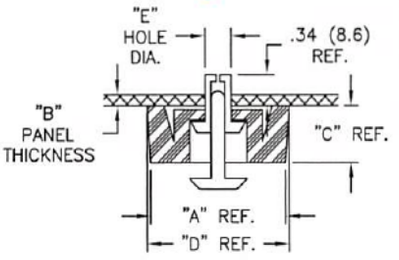

WITH PUSH RIVET

FF		Color: Black	Screw Mat'l: Acetal, RMS-39 Rivet Mat'l: Nylon 6, RMS-52	Standard Pack: 100 per bag			
Part No.	Foot Material	"A" Ref.	"B" Thickness Range	"C" Ref.	"D" Ref.	"E" Hole Diameter	Fig.
FF-001B	RMS-76	.79 (20)	.039 - .091 (1 - 2.3)	.55 (14)	.95 (24)	.197 - .201 (5 - 5.1)	1
FF-004B		.71 (18)		.39 (10)	.79 (20)		
FF-003-P3X5.5B	RMS-42	.53 (13.5)	.031 - .071 (0.8 - 1.8)	.22 (5.5)	.56 (14.2)	.122 - .126 (3.1 - 3.2)	2
FF-005-P4X5B	RMS-76	.79 (20)		.17 (4.2)	.83 (21)	.161 - .165 (4.1 - 4.2)	
FF-005-P4X6B			.071 - .111 (1.8 - 2.8)				
FF-005-P4X7B			.114 - .146 (2.9 - 3.7)				
FF-005-P4X8B			.150 - .189 (3.8 - 4.8)				
FF-006-P4X6B		.55 (14)	.024 - .039 (0.6 - 1)	.24 (6)	.59 (15)		
FF-006-P4X7B			.039 - .079 (1 - 2)				
FF-006-P4X8B			.079 - .118 (2 - 3.1)				
FF-006-P5X6.5B			.031 - .047 (0.8 - 1.2)			.200 - .205 (5.1 - 5.2)	
FF-006-P5X7.5B			.051 - .091 (1.3 - 2.3)				
FF-008-P4X6B		.79 (20)	.031 - .071 (0.8 - 1.8)		.83 (21)	.161 - .165 (4.1 - 4.2)	
FF-008-P4X7B			.075 - .110 (1.9 - 2.8)				
FF-008-P4X8B			.114 - .157 (2.9-4)				
FF-009-P4X6B			0 - .031 (0 - 0.8)	.31 (8)			
FF-009-P4X7B			.039 - .079 (1 - 2)				
FF-009-P4X8B			.083 - .118 (2.1 - 3)				
FF-010-P4X7B		.55 (14)	.039 - .079 (1 - 2)	.35 (9)	.59 (15)		
FF-010-P4X8B			.079 - .118 (2 - 3.1)				
FF-013-P3.5X4.5B		.39 (10)	.020 - .047 (0.5 - 1.2)	.16 (4)	.43 (10.8)	.142 - .146 (3.6 - 3.7)	
FF-013-P3.5X5.5B			.047 - .079 (1.2 - 2)				
FF-013-P3.5X6.0B			.059 - .087 (1.5 - 2.2)				
FF-013-P3.5X7.0B			.098 - .126 (2.5 - 3.2)				

Features
- With Push Rivet style, push in center pin to install, release by pushing pin from other side
- With Drive Screw style, push in screw to install, release with screwdriver

SFF
Soft Fast Foot

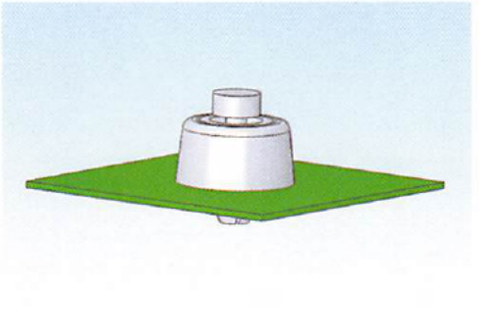

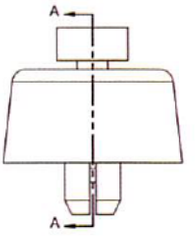

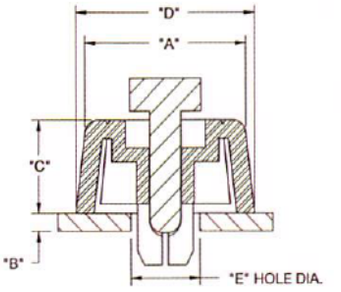

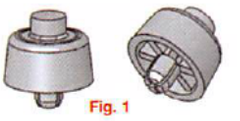

Fig. 1

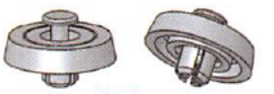

Fig. 2

Features
- Skid and vibration resistant
- Insert center shaft into mounting hole and press pin to secure foot

Material: Foot: TPE, RMS-42 - 80A Durometer • Pin: Polypropylene, RMS-126 • Color: Black						
Part No.	Standard Pack: 100 per bag					
	"E" ± .002 (0.05) Hole Dia.	"B" Thickness Range	"A" Ref."	"C" Ref.	"D" Ref.	Fig.
SFF-018	.305 (7.75)	.031 - .059 (0.8 - 1.5)	.71 (18)	.39 (10)	.79 (20)	1
SFF-021		.197 - .315 (5 - 8)	.79 (20)	.24 (6)	.83 (21)	1
SFF-023		.031 - .059 (0.8 - 1.5)	.91 (23)	.20 (5)	.98 (25)	2
SFF-028		.031 - .059 (0.8 - 1.5)	.71 (18)	.59 (15)	.79 (20)	1

-800-621-1892
ANGIC
Get quote
Angic Global Solutions 1-888-872-0690
https://www.AngicGlobal.com Sales@AngicGlobal.com

POF
Push on Feet

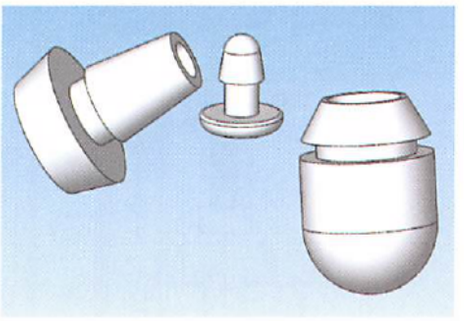

Fig. 1 Fig. 2 Fig. 3

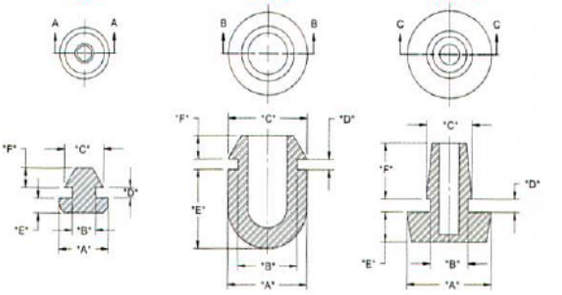

Material: Thermoplastic Elastomer, RMS-262 Color: Black							
Part No.	Standard Pack: 100 per bag						
	"A" Dia.	"B" Dia.	"C" Dia.	"D"	"E"	"F"	Fig.
POF-40022	.31 (7.9)	.126 (3.2)	.17 (4.3)	.13 (3.3)	.06 (1.5)	.14 (4.1)	1
POF-40048	.31 (7.9)	.146 (3.7)	.25 (6.4)	.06 (1.6)	.09 (2.3)	.12 (3)	1
POF-40059	.50 (12.7)	.374 (9.5)	.50 (12.7)	.06 (1.6)	.48 (12.2)	.14 (3.6)	2
POF-50185	.53 (13.4)	.236 (6)	.29 (7.3)	.08 (2)	.18 (4.6)	.34 (8.6)	3
POF-12664	.62 (15.7)	.276 (7)	.34 (8.6)	.05 (1.3)	.20 (5.1)	.16 (4.1)	3

Features
- Simply push into punched or drilled holes
- Ideal for use on metal or plastic housings and cases

D

BPM
Pull Mount Bumper

NEW

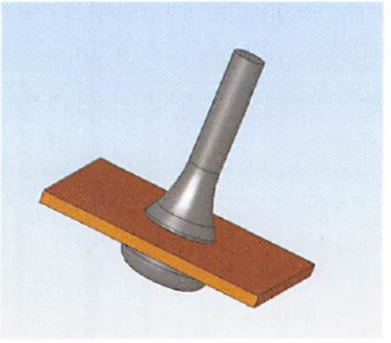

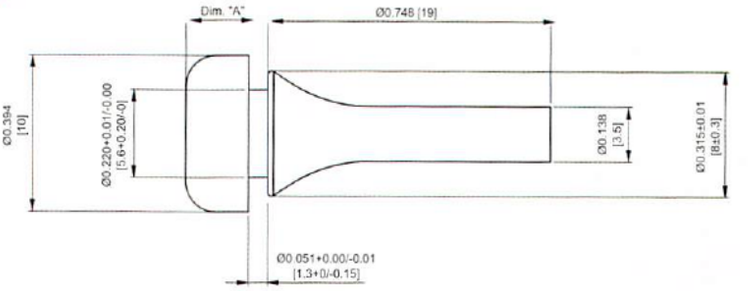

Material: Silicone Rubber, RMS-321 Color: Black		Standard Pack: 1,000 per bag		
Part No.	"A"	Color	Hole Dia.	Panel Thickness
BPM-1	.12 ± .01 (3 ± 0.25)	Gray	.24 - .25 (6 - 6.35)	.059 (1.5)
BPM-2	.16 ± .01 (4.2 ± 0.25)	Black		

Features
- Pull mount end can be cut off after mounting to save space
- Rubber material provides shock & vibration protection and skid resistance

BAB
Break-Away Bumper

NEW

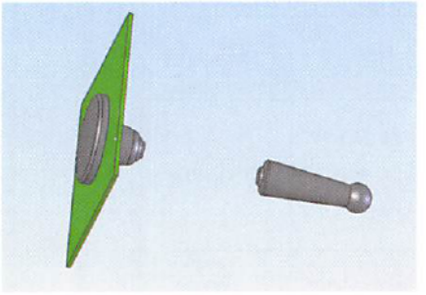

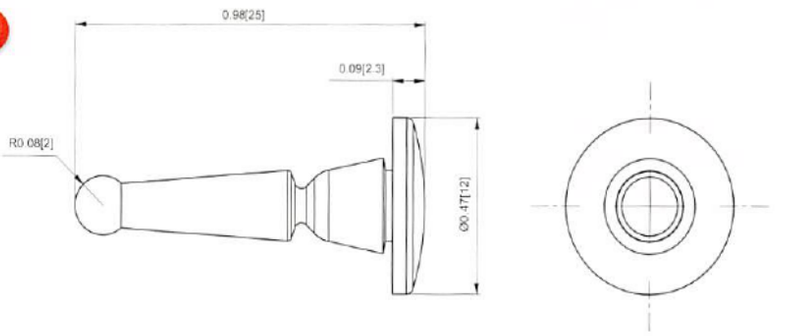

Material: Silicone Rubber 30 Shore A, RMS-316; Color: Black		
Standard Pack: 1,000 per bag		
Part No.	Chassis Thickness	Chassis Hole Diameter
BAB-1	.024 - .031 (0.6 - 0.8)	.197 - .213 (5 - 5.4)

Features
- Mounting tab designed to break-away after assembly to save space
- Quick and easy pull-through assembly
- Silicone rubber provides high temperature resistance and anti-slip properties

39-4060 Samp
ANGIC
Get quote
Angic Global Solutions 1-888-872-0690
https://www.AngicGlobal.com Sales@AngicGlobal.com

LLF
Leg Leveling Foot

NEW

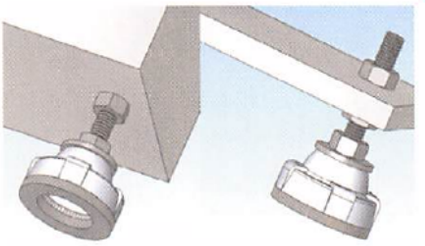

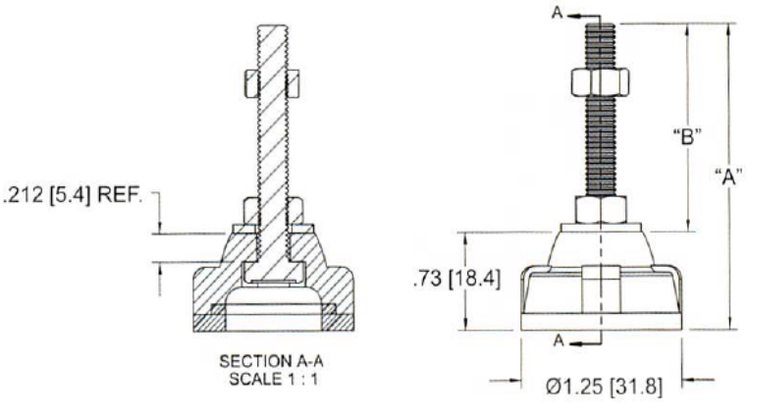

Features

- Adjustable height and vibration control
- Self-centering for un-even mounting surfaces
- Non-stick plastic foot base with steel hardware for strength and durability

D

Material: TPE, RMS-350 and Polypropylene, RMS-08 Hardware: RMS-228 Color: Black			Standard Pack: 10 per bag
Part No.	"A" Ref.	"B" Ref.	Parts Include
LLF-1	2.28 (58)	1.56 (39.6)	M6x45 Hex Bolt, Two M6 Nuts, one 5/8 x .04-05 Washer
LLF-2	2.26 (57.5)	1.54 (39.1)	1/4-20 X 1-3/4 Hex Bolt, Two 1/4-20 Nuts, one 5/8 x .04-05 Washer

ASPR/ASPS
Anti Slip Pads

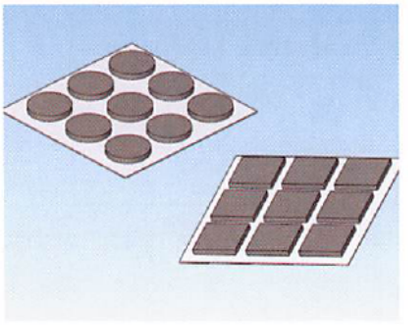

ASPR

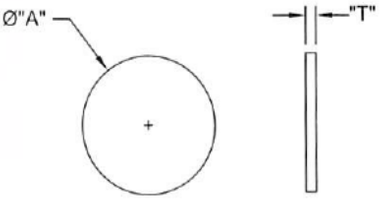

ASPS

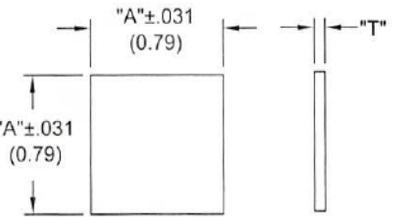

Features

- Good for slip protection
- Economical alternative

ASP	Mat'l: Polyolefin foam, closed cells, RMS-128; Adhesive: pressure sensitive rubber based adhesive, RMS-129 Color: Black		
Part No.	"A"	"T"	Standard Pack
ASPR-8-062	.50 (12.7)	.062 ± .009 (1.6 ± 0.2)	1,000 pieces per roll
ASPR-12-062	.75 (19.1)		
ASPR-16-062	1.00 (25.4)		
ASPR-8-125	.50 (12.7)	.125 ± .012 (3.2 ± 0.3)	
ASPR-12-125	.75 (19.1)		
ASPR-16-125	1.00 (25.4)		
ASPS-8-062	.50 (12.7)	.062 ± .009 (1.6 ± 0.2)	40/pad
ASPS-12-062	.75 (19.1)		20/pad
ASPS-16-062	1.00 (25.4)		8/pad
ASPS-8-125	.50 (12.7)	.125 ± .012 (3.2 ± 0.3)	40/pad
ASPS-12-125	.75 (19.1)		20/pad
ASPS-16-125	1.00 (25.4)		8/pad

ANGIC
Get quote
-800-621-1892
Angic Global Solutions 1-888-872-0690
https://www.AngicGlobal.com Sales@AngicGlobal.com

RBS
Bumpers

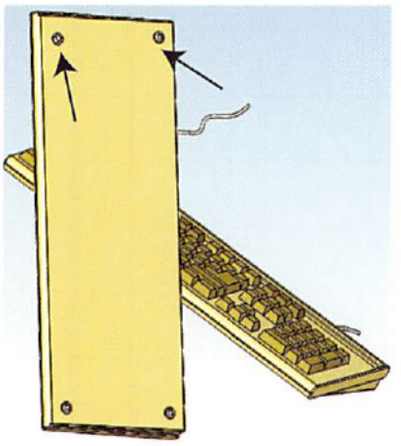

Features
- Good for vibration and shock dampening
- Crack resistant and resilient
- Easy "peel off" application

RBS		Mat'l: Polyurethane, RMS-64 Color: Clear*; Adhesive: Rubber, RMS-68			
Part No.	Dia. (or "W") ± .020 (0.5)	Height "H" ± .020 (0.5)	6x12 Matrix kiss cut pad. Pieces/pad	Type	Carton Quantity
RBS-20	.40 (10.2)	.10 (2.5)	242	1 (Pyramid)	5,082
RBS-3R	.50 (12.7)	.23 (5.8)	200		5,000
RBS-32R		.12 (3.1)			
RBS-29	.78 (19.8)	.25 (6.4)	98		2,940
RBS-19	.81 (20.5)	.30 (7.6)			2,646
RBS-34	.37 (9.5)	.12 (3.1)	300	2 (Cylindrical)	6,000
RBS-35		.19 (4.8)	200		5,000
RBS-1	.50 (12.7)	.14 (3.5)			
RBS-5		.06 (1.6)			
RBS-6		.25 (6.3)			
RBS-11	.62 (15.9)	.40 (10.1)	128		2,560
RBS-44	.75 (19.1)	.16 (4.1)	98		2,450
RBS-41	.78 (20.0)	.20 (5.1)	84		3,360
RBS-24	.81 (20.5)	.12 (3.1)	72		2,520
RBS-72	1.24 (31.5)	.10 (2.5)	32		2,400
RBS-40	.25 (6.4)	.06 (1.6)	578	3 (Dome)	15,028
RBS-27	.31 (7.9)	.08 (2.2)	450		5,400
RBS-7	.34 (8.6)				
RBS-12	.38 (9.6)	.15 (3.8)	72		7,200
RBS-22		.21 (5.4)	300		6,000
RBS-2	.44 (11.1)	.20 (5.1)	242		5,082
RBS-15	.62 (16.0)	.31 (7.9)	128		3,200
RBS-8	.70 (17.6)	.38 (9.6)	98		2,254
RBS-37	.72 (18.3)	.56 (14.2)	100 separate parts		1,500
RBS-39	.75 (19.1)	.07 (1.9)	84		5,040
RBS-30	1.8 (45.7)	.60 (15.8)	100 separate parts	4 (Round)	500
RBS-17	.88 (22.3)	.40 (10.1)	72	5 (Round)	1,440
RBS-4	.75 (19.1)	.34 (8.6)	100 separate parts	6 (Square)	5,600
RBS-36	1.00 (25.4)	.18 (4.7)	55		2,310
RBS-18	.50 (12.7)	.14 (3.5)	200	7 (Round)	5,000
*RBS-33-SD		.15 (3.8)		8 (Round-pyramid)	
Color: Black also available. To order black, add "-BK" to part number.					
Colors: Brown "-BN", white "-WH", or gray "-GY" available by special order only.					
*RBS-33-SD is available in clear color only					

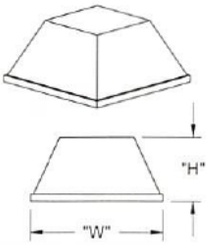

Type 1



Type 2

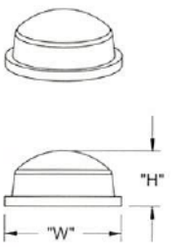

Type 3

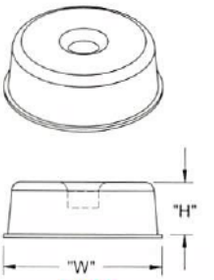

Type 4

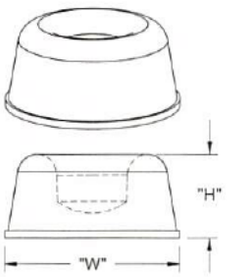

Type 5

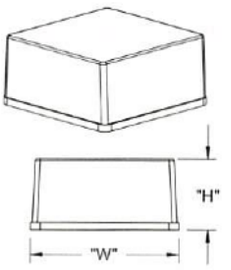

Type 6

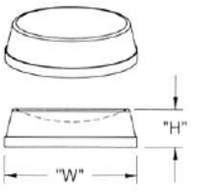

Type 7

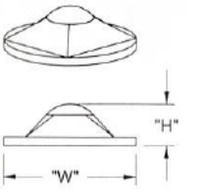

Type 8

Get quote
Angic Global Solutions 1-888-872-0690
https://www.AngicGlobal.com Sales@AngicGlobal.com

Notes

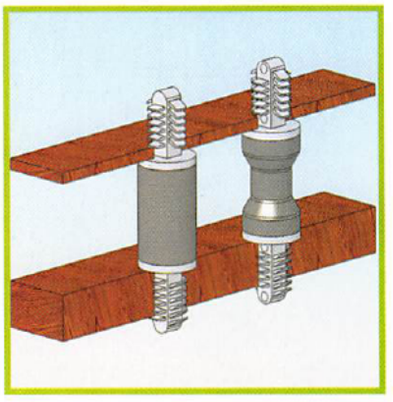

- Up-to-the minute product updates can be seen on our corporate web page at www.richco-inc.com
- Raw Material Specifications (RMS) can be found at the end of the catalog – pages 227-234
- Want to try a sample? Please call 1-800-621-1892

-800-621-1892
ANGIC
Get quote
Angic Global Solutions 1-888-872-0690
https://www.AngicGlobal.com Sales@AngicGlobal.com

General Features

The cooling of electronic applications plays an important role in smooth operation. Richco has a wide variety of mounting, protection, vibration dampening and filtration products.

Richco's fan accessories offer a simple solution for the protection of mounted fans and prevent dust ingress. Our products also offer protection to the user from accidental damage and bodily harm.

Richco TPE fan mounts play an important role in mounting the fan unit securely and also in suppressing unwanted noise generated by the fan itself.

In order to dissipate static build from airflow moving through the fan intake, Richco offers a metal grounding finger which can be connected to a grounding cable to protect the fan unit from unwanted EMI and RFI.

Typical Applications

• Office Equipment	Computers
• Brown Goods/ Consumer Electronics	Plasma/LCD flat screen televisions, projection TVs, set top boxes
• White Goods	Refrigeration and air-conditioning units
• Telecommunications	Distribution racks and panels, mobile base station equipment
• General Electronic	Electronic cabinets

Materials

For material details please see individual parts in this section and refer to relevant RMS number where applicable for specific details, this information can be found at the rear of the catalog.

Introduction

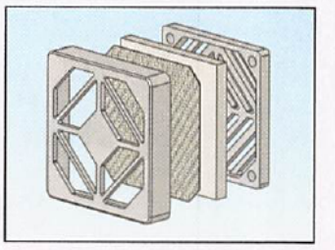

Fan Filters

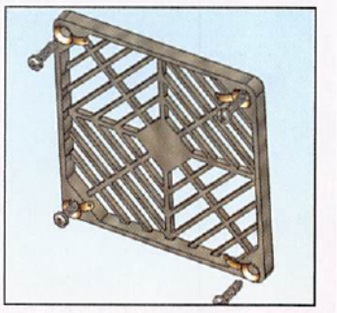

Grounding Fingers

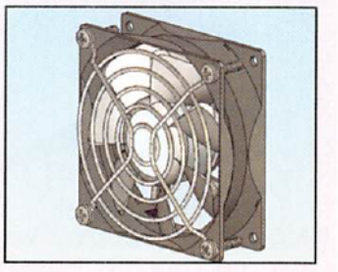

Fan Guards

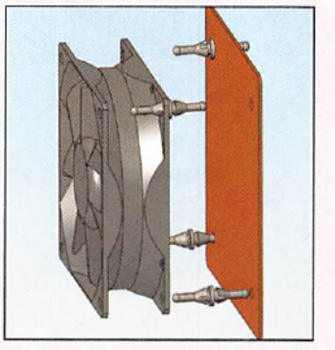

Fan Mounts

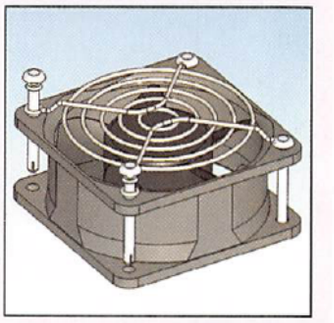

Fan Mount Rivets

E

ANGIC GLOBAL SOLUTIONS Get quote
Angic Global Solutions 1-888-872-0690
https://www.AngicGlobal.com Sales@AngicGlobal.com

TYPICAL FAN ASSEMBLY

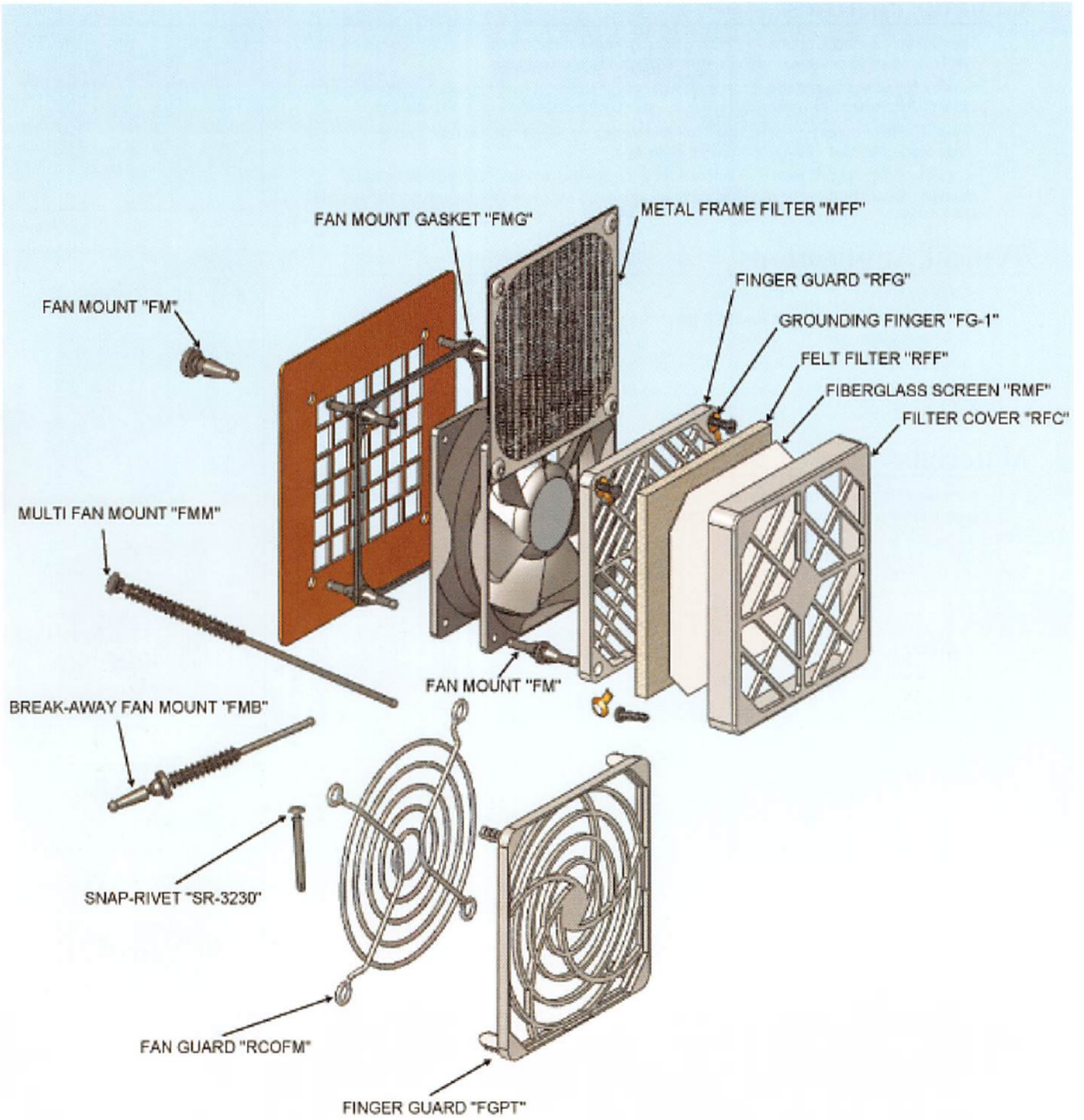

800-621-1892
Get quote
Angic Global Solutions 1-888-872-0690
https://www.AngicGlobal.com Sales@AngicGlobal.com

RCP/RFG/RFC/RFF/RMF
Fan Filters

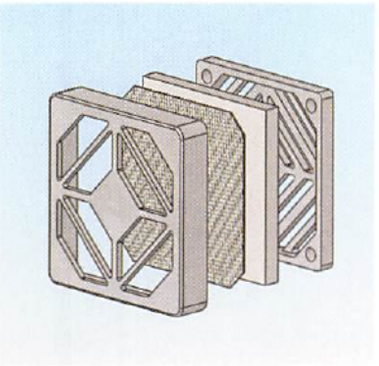

Features

- Specially designed for axial fan-cooled equipment
- Use these kits to protect your equipment from airborne contamination and reduce external fan noise
- The fan/finger guards provide protection from moving parts
- The felt filters are used in any moderately dusty environment
- The filter cover keeps both the metal and felt filter in place

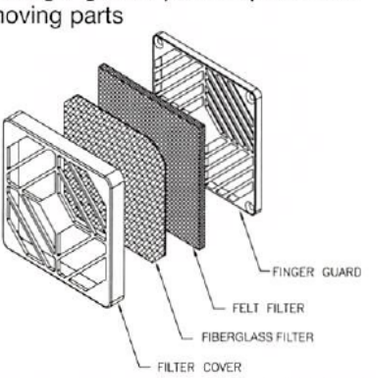

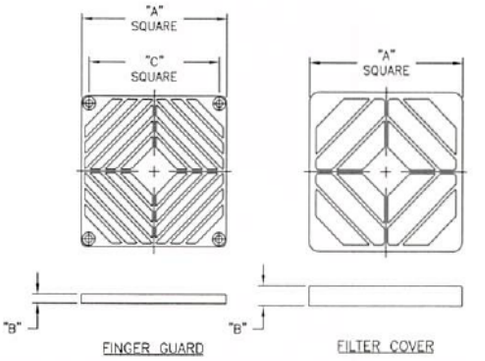

*Filter Set Part No.	Finger Guard				Filter Covers are not Supplied Separately. Part No. is for Reference Only		
	Finger Guard Part No.	"A"	"B"	"C"	Filter Cover Part No.	"A"	"B"
RCP-040-NV	RFG-040-NV	1.67 (42.3)	.13 (3.3)	1.26 (32)	RFC-040-NV	1.83 (46.5)	.26 (6.5)
RCP-060-NV	RFG-060-NV	2.36 (60)	.24 (6)	1.97 (50)	RFC-060-NV	2.54 (64.4)	
RCP-080-NV	RFG-080-NV	3.19 (81)		2.81 (71.4)	RFC-080-NV	3.28 (86)	
RCP-092-NV	RFG-092-NV	3.62 (92)	.22 (5.5)	3.25 (82.5)	RFC-092-NV	3.80 (96.5)	.48 (12.2)
RCP-120-NV	RFG-120-NV	4.76 (121)	26 (6.5)	4.13 (105)	RFC-120-NV	4.96 (126)	.51 (13)

*Filter Set includes finger guard, filter cover, fiberglass filter and felt filter.

Material: Filter Cover & Guard: PC/ABS, RMS-256 Color: Black; Fiberglass Filter, RMS-325; Felt Filter: Polyester & Polypropylene; RMS-255 Color: White, Black Available by Special Order.					
	40 x 40	60 x 60	80 x 80	92 x 92	120 x 120
Finger Guard Only	RFG-040-NV (50 Per Box)	RFG-060-NV (50 Per Box)	RFG-080-NV (50 Per Box)	RFG-092-NV (50 Per Box)	RFG-120-NV (50 Per Box)
*Filter Set	RCP-040-NV (20 per Box)	RCP-060-NV (20 per Box)	RCP-080-NV (10 per Box)	RCP-092-NV (10 per Box)	RCP-120-NV (10 per Box)
Felt Filter Only	RFF-040-NV (100 per Box)	RFF-060-NV (100 per Box)	RFF-080-NV (100 per Box)	RFF-092-NV (100 per Box)	RFF-120-NV (50 per Box)
Fiberglass Filter Only	RMF-040-NV (500 per Box)	RMF-060-NV (500 per Box)	RMF-080-NV (400 per Box)	RMF-092-NV (400 per Box)	RMF-120-NV (250 per Box)

FG-1
Grounding Finger

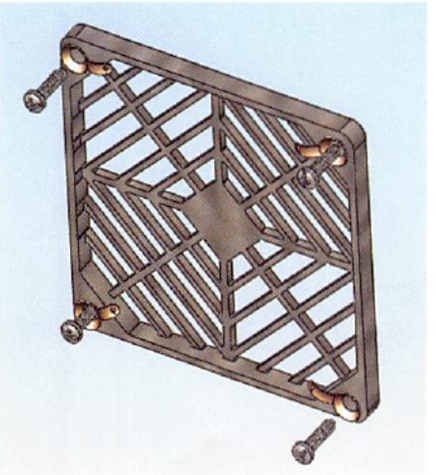

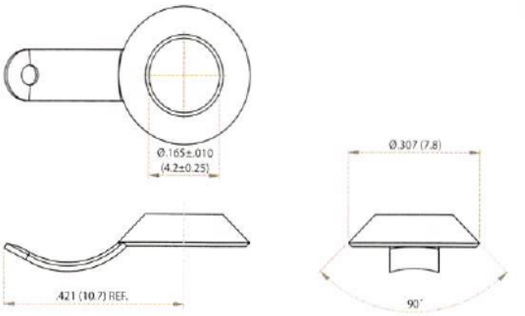

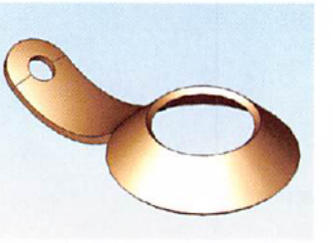

Features

- Helps to eliminate static electricity that is created when air passes though the metallic filter
- Enables grounding to the chassis because it is in contact with the metal screw and metal filter
- We recommend using four grounding fingers per assembly

FG-1
0.3 Thick Brass, RMS-231; Tin Plated, RMS-246
Standard Pack: 1,000 per bag

539-4060 Sam
Get quote
Angic Global Solutions 1-888-872-0690
https://www.AngicGlobal.com Sales@AngicGlobal.com

MFF
Metal Frame Filter

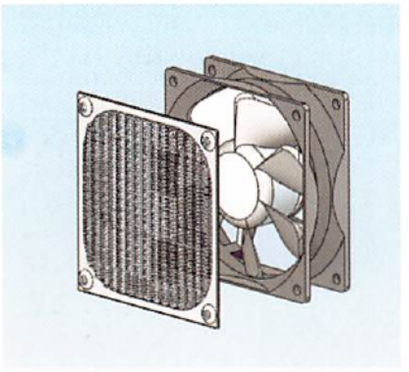

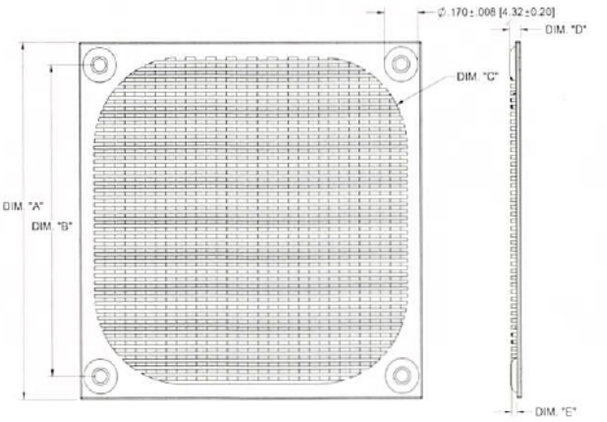

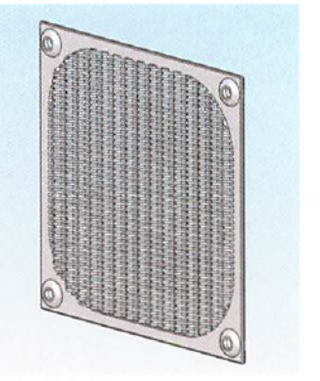

Features

- Provides maximum airflow with efficient filtering
- Acts as a finger guard and filter
- When used in conjunction with metal screw, it conducts static electricity
- Provides EMI & RFI protection

MFF			Standard Pack: 100 per bag		
Mat'l: Frame: Aluminum 1060, RMS-246; Mesh: Stainless Steel 304, RMS-283; Finish: Clean	"A"	"B"	"C" Ref.	"D"± .012 (0.3)	"E"± .012 (0.3)
MFF-60	2.362 (60)	1.969 (50)	R.295 (7.5)	.170 (4.3)	.126 (3.2)
MFF-80	3.300 (83.82)	2.810 (71.37)	R.394 (10)	.176 (4.45)	
MFF-92	3.622 (92)	3.249 (82.5)	R.492 (12.5)	.170 (4.3)	
MFF-120	4.680 (118.87)	4.125 (104.77)	R.984 (25)	.176 (4.45)	

SR-3230
Snap Rivet (Long)

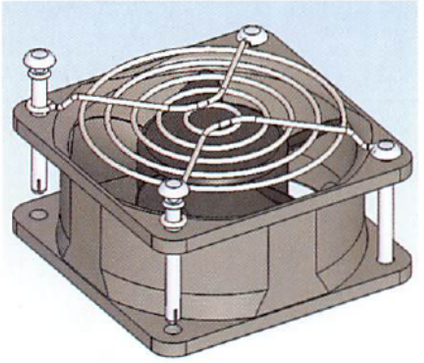

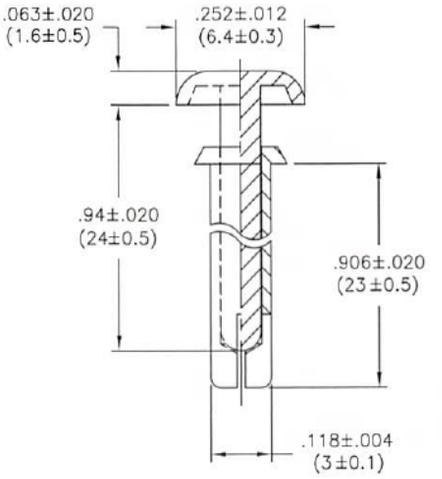

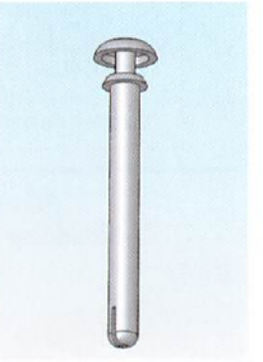

Features

- Excellent for fan housing applications

Material: Nylon 6, RMS-52 • Color: Black			
Part No.	Standard Pack: 1,000 per bag		
	Mounting Hole Dia.	Panel Thickness	Extraction Force
SR-3230	.122-.126 (3.1-3.2)	.807-.847 (20.5-21.5)	17.6 lbs. (8kg) min.

ANGIC GLOBAL SOLUTIONS
Get quote
-800-621-1892
Angic Global Solutions 1-888-872-0690
https://www.AngicGlobal.com Sales@AngicGlobal.com

RCOFM
Fan Guards

NEW

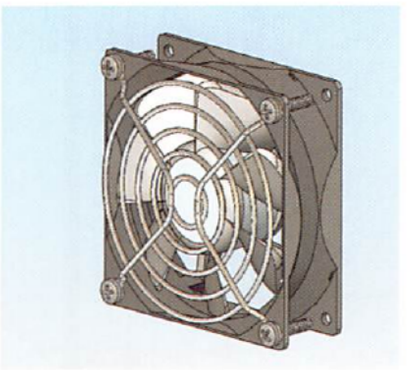

Features

- These wire formed fan guards act as a barrier to foreign objects and prevent accidental finger injury

Fig. 1

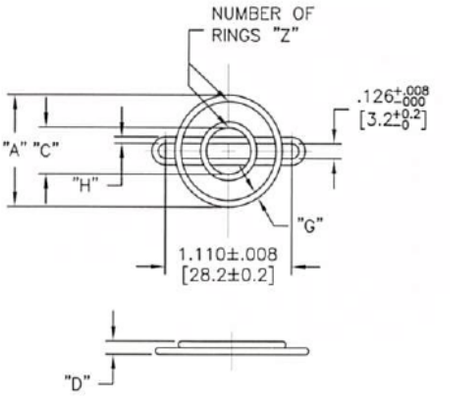

Fig. 2

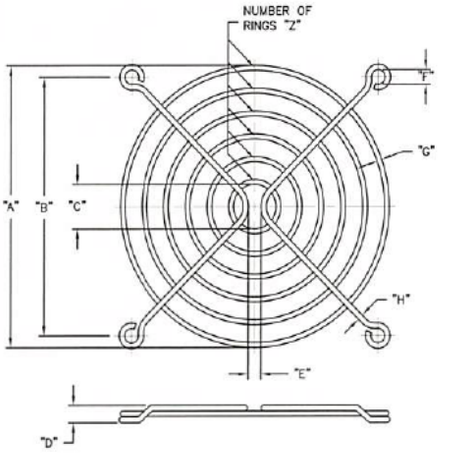

Fig. 3

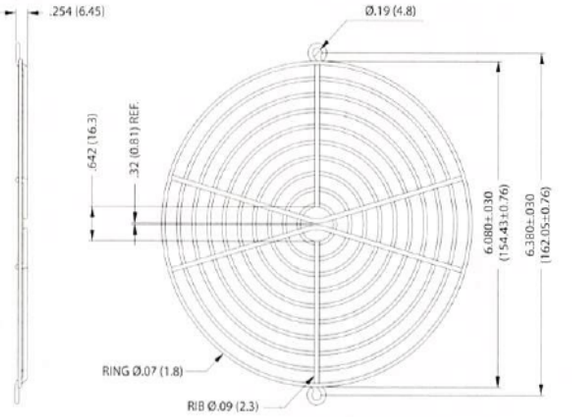

RCOFM							Standard Pack: 100 per bag			
Mat'l: Steel Wire Electroplated, RMS-261; Nickel Chrome Finish, RMS-229	"A" ± .03 (0.8)	"B" ± .03 (0.8)	"C" ± .03 (0.8)	"D" ± .03 (0.8)	"E" Ref.	"F" ± .03 (0.8)	"G" ± .03 (0.8)	"H" ± .03 (0.8)	"Z" Number of rings	Fig.
RCOFM-25	.94 (2.4)	–	.41 (10.5)	.09 (2.2)	–	–	.055 (1.4)	.055 (1.4)	2	1
RCOFM-40	1.15 (29.1)	1.26 (32)	.56 (14.2)	.19 (4.8)	.16 (4)	ø .16 (4)	ø .060 (1.6)	ø .060 (1.6)	2	2
RCOFM-50	1.65 (42)	1.62 (41.1)		.19 (4.8)	.15 (3.7)	ø .18 (4.6)			3	
RCOFM-60	2.09 (53.2)	1.97 (50)		.17 (4.4)	.12 (3)	ø .18 (4.6)			4	
RCOFM-80	3.00 (76.2)	2.82 (71.5)		.19 (4.9)	.14 (3.5)	ø .20 (5.2)	ø .07 (1.8)	ø .07 (1.8)	5	
RCOFM-92	3.54 (90)	3.25 (82.5)		.22 (5.5)	.17 (4.2)	ø .18 (4.6)	ø .063 (1.6)		6	
RCOFM-120	4.55 (115.6)	4.13 (104.8)	.35 (9)		.10 (2.6)		ø .07 (1.8)		8	
RCOFM-150-A	See drawing (Fig. 3) for dimensions.									3

539-4060 Samp
Get quote
Angic Global Solutions 1-888-872-0690
https://www.AngicGlobal.com Sales@AngicGlobal.com

Fan Accessories

FGPT
Fan Guard

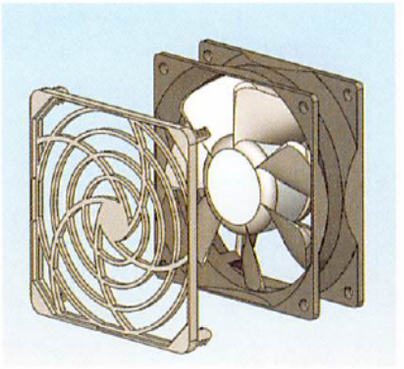

Features
- Blind hole mounting ends eliminate the need for screw mounting
- Quick and easy assembly

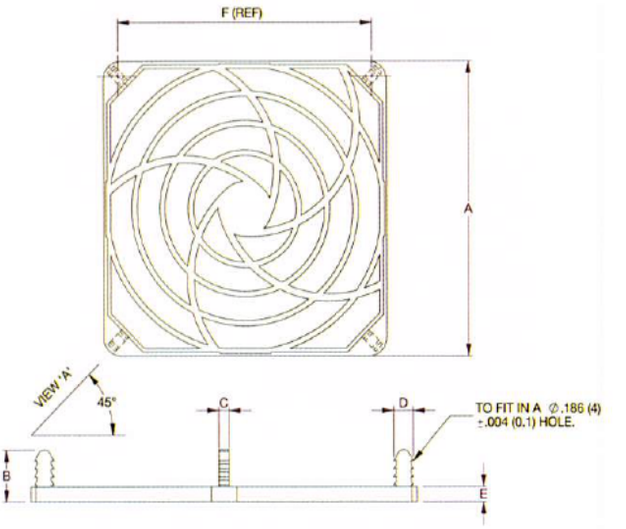

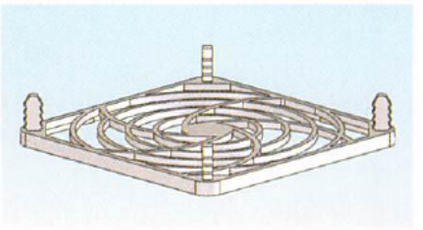

E

Mat'l: ABS, RMS-171 Color: Black						
Standard Pack: 100 per bag						
Part No.	"A"	"B"	"C"	"D"	"E"	"F" Ref.
FGPT-80	3.150 (80)	.571 (14.5)	.110 (2.8)	.217 (5.5)	.158 (4)	2.795 (71)
FGPT-92	3.622 (92)	.591 (15)	.102 (2.6)		.163 (4.15)	3.228 (82)
FGPT-120	4.685 (119)	.650 (16.5)	.118 (3)		.177 (4.5)	4.094 (104)

FMM
Multi Fan Mount

NEW

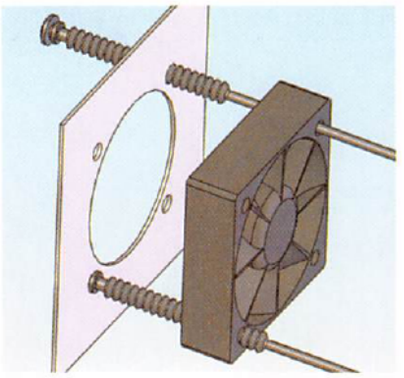

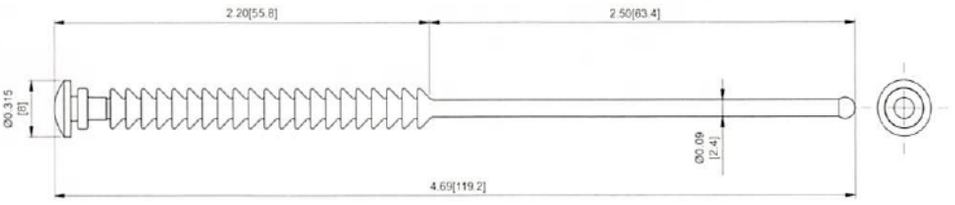

Patent Pending

Features
- Fits all industry standard DC fans from 10mm to 51mm fan thickness
- Provides shock and vibration protection

Material: Silicone Rubber 40 Shore A, RMS-316				
Standard Pack: 1,000 per bag				
Part No.	Fan Thickness	Fan Hole Diameter	Chassis Thickness	Chassis Hole Diameter
FMM-1	.39 - 2.00 (10 - 51)	.126 - .177 (3.2 - 4.5)	.039 - .059 (1 - 1.5)	.177 - .189 (4.5 - 4.8)

-800-621-1892
ANGIC
Get quote
Angic Global Solutions 1-888-872-0690
https://www.AngicGlobal.com Sales@AngicGlobal.com

FM
Fan Mounts

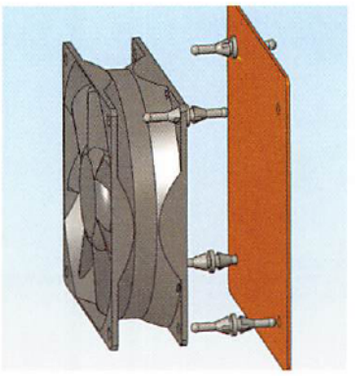

Fan Hole: Pull Through: .20 ± .04 (5 ± 1)
Fan Thickness: .079 (2) Max.

NEW

Fig. 1

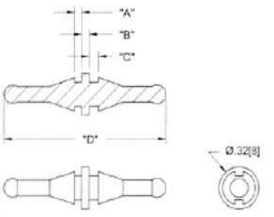

Fan Hole: Pull Through: .20 ± .04 (5 ± 1)
Fan Thickness: .122 (3.1)

Fig. 2

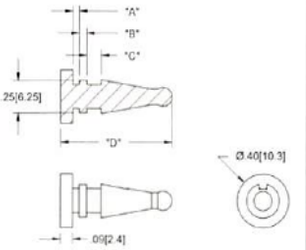

Fan Hole:
Pull Through: FM-5, .138 ± .039 (3.5 ± 1)
FM-6, .161 ± .008 (4.3 ± 2)
Fan Thickness: FM-5, .787 (20)
FM-6, .591 (15)

Fig. 3

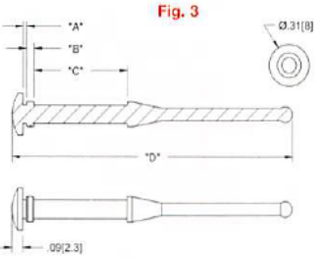

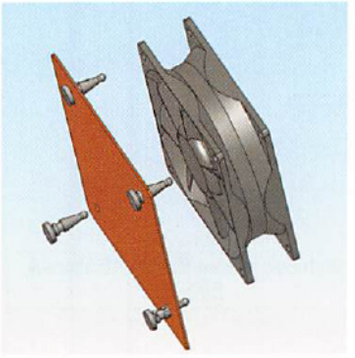

Panel Hole: Pull Through: .20 ± .04 (5 ± 1)
Panel Thickness: .055 (1.4) Max.

Panel Hole: Pull Through: .20 ± .04 (5 ± 1)
Panel Thickness: .055 (1.4) Max.

Panel Hole:
Pull Through: FM-5, .138 ± .039 (3.5 ± 1)
FM-6, .161 ± .008 (4.3 ± 2)
Panel Thickness: FM-5, .031 (.8) Max.
FM-6, .118 (3) Max.

FM		Standard Pack: 1,000 per bag					
Part. No.	Material	Color	"A"	"B"	"C"	"D"	Figure
FM-1	EPDM Rubber, 30 Shore A, RMS-166	Black	.05 (1.3)	.06 (1.5)	.07 (1.9)	1.27 (32.3)	1
FM-2	EPDM Rubber, 40 Shore A, RMS-180						
FM-3	EPDM Rubber, 30 Shore A, RMS-166				.12 (3)	.88 (22.2)	2
FM-4	EPDM Rubber, 40 Shore A, RMS-180						
FM-5	Silicone Rubber, 35 Shore A, RMS-316		.03 (0.7)		.73 (18.5)	2.20 (56)	3
FM-6			.10 (2.5)	.08 (2)	.55 (14)	2.12 (53.8)	

Features
- High elongation rubber for easy fan mounting and component assembly
- Provides shock and vibration protection

FMG
Fan Mount Gasket

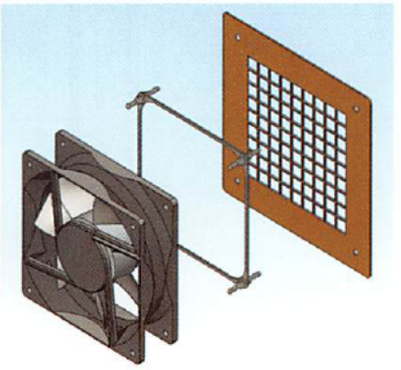

NEW

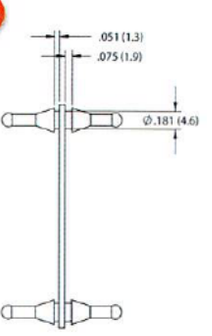

Fan Hole: .197 ± .039 (5 ± 0.1)
Fan Thickness: .079 (2)

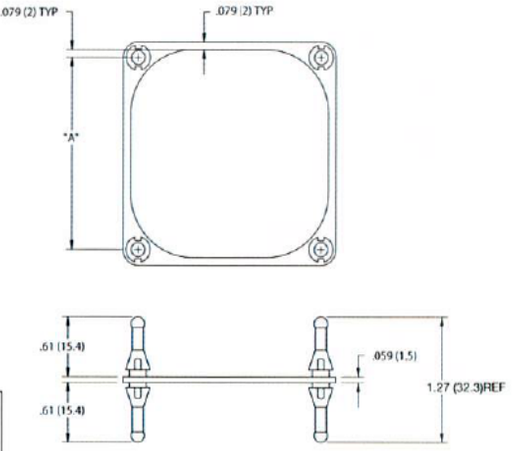

Panel Hole: .197 ± .039 (5 ± 0.1)
Panel Thickness: .055 (1.4)

Features
- Built in gasket helps reduce vibration and noise
- One piece design allows for quick mounting of fans

Material: EPDM Rubber 40 Shore A, RMS-180 Color: Black	
Standard Pack: 100 per bag	
Part No.	"A" As Assembled
FMG-1	1.969 (50)
FMG-2	2.815 (71.5)
FMG-3	4.142 (105.2)

39-4060 Samp
Get quote
Angic Global Solutions 1-888-872-0690
https://www.AngicGlobal.com Sales@AngicGlobal.com

FMB
Break-Away Fan Mount

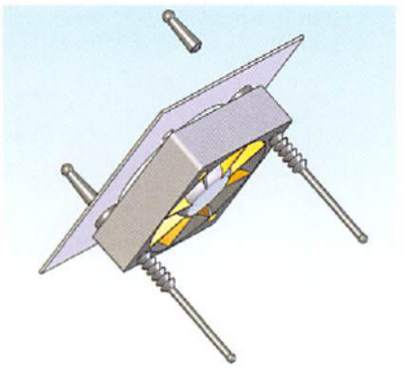

NEW

Fan Hole: FMB-1, .13 to .14 (3.2 to 3.5)
FMB-2, .16 to .18 (4 to 4.5)
Fan Thickness: FMB-1, .39 to .98 (10 to 25)
FMB-2, .98 to 2.01 (25 to 51)

Fig. 1

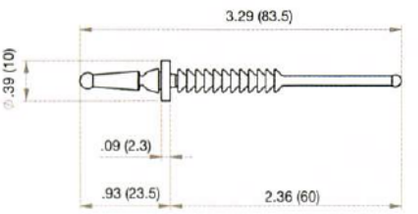

ASSEMBLY PROCEDURE:
- STEP 1: PULL MOUNT TO PANELGRIP BREAKS-AWAY AFTER FIXING
- STEP 2: LOCATE AND ASSEMBLE FAN HOUSING

Features
- Allows pre-assembly of mount to the panel
- Panel mount end designed to break-away after assembly to save space

Fig. 2

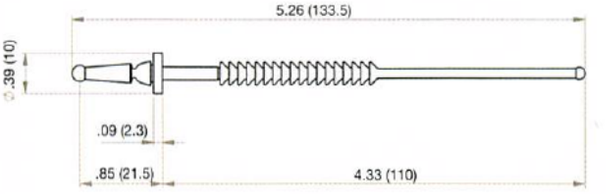

Panel Hole: FMB-1, .18 to .20 (4.5 to 5)
FMB-2, .03 to .06 (.8 to 1.6)
Panel Thickness: .03 to .06 (.8 to 1.6)

Material: Silicone Rubber 40 Shore A, RMS-316	
Standard Pack: 1,000 per bag	
Part No.	Fig.
FMB-1	2
FMB-2	1

Notes

-800-621-1892
Get quote
Angic Global Solutions 1-888-872-0690
https://www.AngicGlobal.com Sales@AngicGlobal.com

General Features

Richco's range of LED hardware components are designed to protect and support LEDs and also aid in the transmission of light to front panel indicators.

Richco's LED Spacers fit most standard LEDs and can raise the LED to the desired position on the PCB, minimizing shifting, uniformity and aiding ease of installation especially for surface mount applications.

Holding the LED at the desired angle position on the front panel is another application area for which Richco has LED hardware solutions. Richco has a range of angled and front panel LED holders, which ensure that the LED is held securely in position.

Directing light from the PCB to the front panel from awkward PCB mounting positions can be solved with Richco's range of solid light pipes, which are ideal for use with surface mount LEDs.

Typical Applications

• Brown Goods/ Consumer Electronics	Hi Fi cassette players, CD players, DVD players, TV set top boxes and television/monitor standby indicators
• Games Machines	Coin operated slot machines
• Office Equipment	Computers, hard drive/battery and standby indicators
• White Goods	Appliance control panels and boiler control panels
• Telecommunications	Distribution racks and panels, transponder/receiver cards, signal amplification modules
• Medical Equipment	Monitoring and scanning equipment

Materials

Most of Richco's LED Hardware products come in the following materials.

Material	UL94 Flammability Rating	RoHS Compliance	RMS
Nylon 6/6	V2	Yes	01
PVC	V0	Yes	26
Polycarbonate	V2	Yes	181

For material details please see individual parts in this section and refer to relevant RMS number which can be found at the end of the catalog.

Introduction

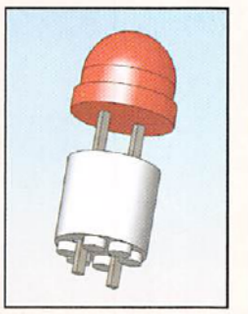

Molded LED Spacers

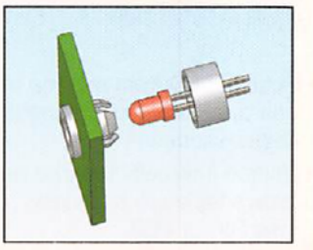

LED Clips & Rings

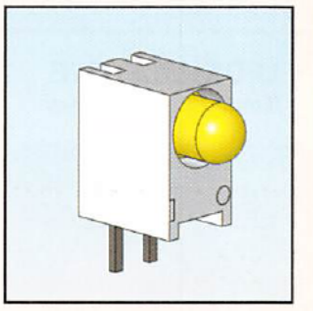

LED Holders

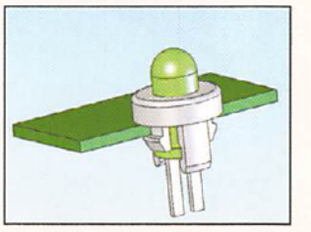

LED Holders

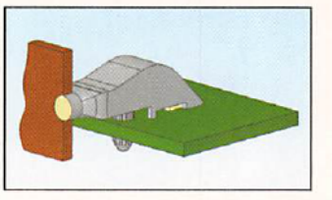

Light Pipes

F

-539-4060 San

Get quote

Angic Global Solutions 1-888-872-0690
https://www.AngicGlobal.com Sales@AngicGlobal.com

LEDS2M
Molded LED Spacer

For T-1 3/4 Series LED

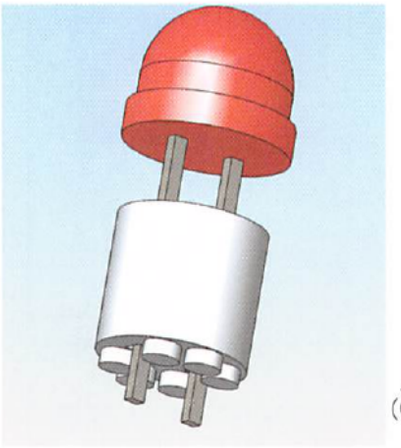

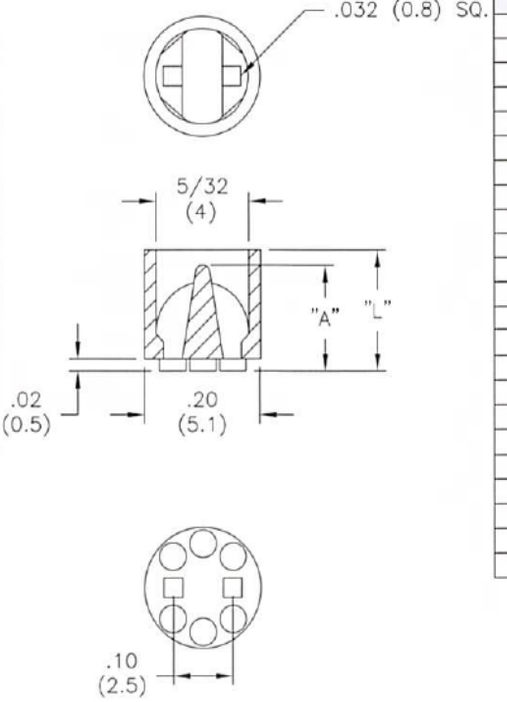

- Spaces LED from surface of board, minimizing shifting and height variations
- Unique internally tapered design allows for quick and easy insertion of LED
- Positive self-alignment of leads

Material: Nylon 6/6, RMS-01 Color: Natural		
Part No.	Standard Pack: 1,000 per bag	
	"L" ± .010 (0.25)	"A" Ref
LEDS2M-120-01	.120 (3)	.08 (2)
LEDS2M-140-01	.140 (3.6)	
LEDS2M-160-01	.160 (4.1)	
LEDS2M-180-01	.180 (4.6)	
LEDS2M-200-01	.200 (5.1)	
LEDS2M-220-01	.220 (5.6)	
LEDS2M-240-01	.240 (6.1)	
LEDS2M-250-01	.250 (6.4)	.20 (5.1)
LEDS2M-260-01	.260 (6.6)	
LEDS2M-280-01	.280 (7.1)	
LEDS2M-300-01	.300 (7.6)	
LEDS2M-340-01	.340 (8.6)	
LEDS2M-360-01	.360 (9.1)	
LEDS2M-380-01	.380 (9.7)	.33 (8.4)
LEDS2M-400-01	.400 (10.2)	
LEDS2M-420-01	.420 (10.7)	
LEDS2M-450-01	.450 (11.4)	
LEDS2M-460-01	.460 (11.7)	
LEDS2M-550-01	.550 (14)	.45 (11.4)
LEDS2M-600-01	.600 (15.2)	
LEDS2M-650-01	.650 (16.5)	.58 (14.7)
LEDS2M-850-01	.850 (21.6)	.70 (17.8)
LEDS2M-900-01	.900 (22.9)	

F

LEDS1E/LEDS2E
Molded LED Spacers

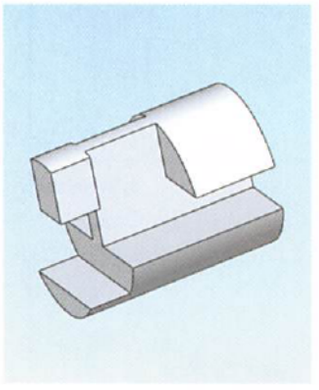

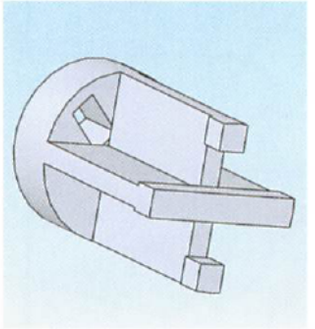

LEDS1E

For T-1 Series LED

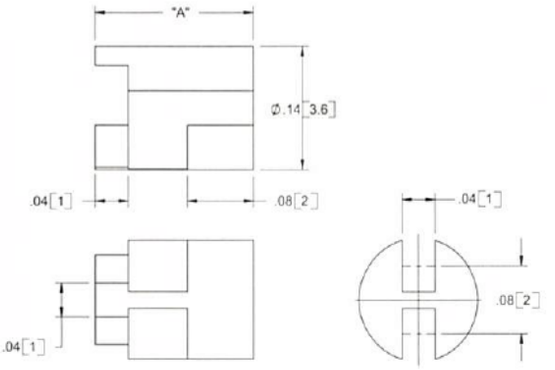

Material: Nylon 6/6, RMS-01* Color: Natural	
Part No.	Standard Pack: 1,000 per bag
	"A"
LEDS1E-3-01	3/16 (4.8)
LEDS1E-4-01	1/4 (6.4)
LEDS1E-6-01	3/8 (9.5)
LEDS1E-8-01	1/2 (12.7)
LEDS1E-10-01	5/8 (15.9)
LEDS1E-12-01	3/4 (19.1)
LEDS1E-14-01	7/8 (22.2)
LEDS1E-16-01	1 (25.4)
*Available in UL94 V0 material by special order. To order, replace -01 with -19	

LEDS2E

For T-1 3/4 Series LED

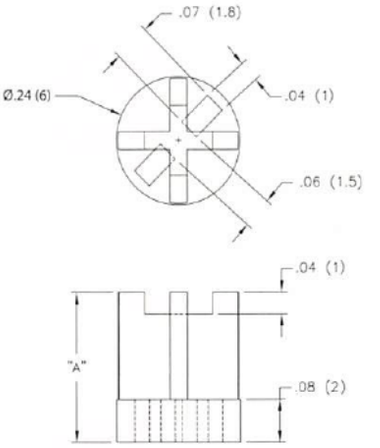

Material: Nylon 6/6, RMS-01* Color: Natural	
Part No.	Standard Pack: 1,000 per bag
	"A"
LEDS2E-3-01	3/16 (4.8)
LEDS2E-4-01	1/4 (6.4)
LEDS2E-6-01	3/8 (9.5)
LEDS2E-8-01	1/2 (12.7)
LEDS2E-10-01	5/8 (15.9)
LEDS2E-12-01	3/4 (19.1)
LEDS2E-14-01	7/8 (22.2)
LEDS2E-16-01	1 (25.4)
*Available in UL94 V0 material by special order. To order, replace -01 with -19	

800-621-1892
Get quote
Angic Global Solutions 1-888-872-0690
https://www.AngicGlobal.com Sales@AngicGlobal.com

LEDS1/LEDS2/LEDS3
LED Spacers

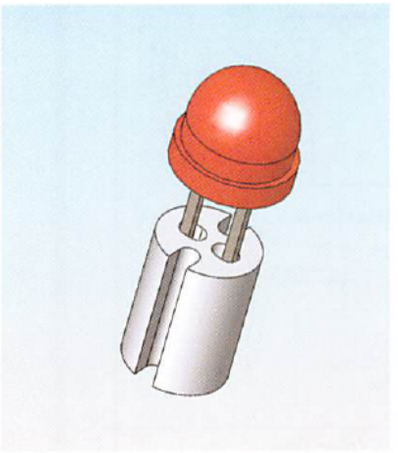

- Allows easy assembly without tools, while firmly holding LEDs during handling
- Provides lead separation and lateral stability for components

LEDS 1/2
For T-1 Series LED

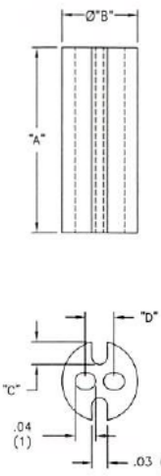

LEDS 3
For T-1 3/4 Series LED

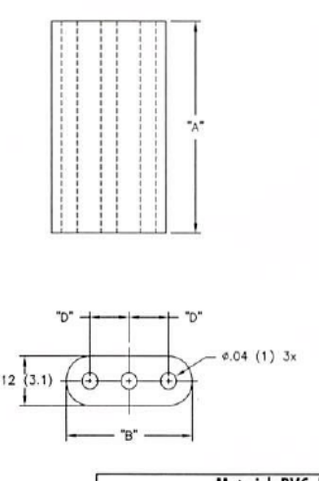

Material: PVC, RMS-26 • Color: Black				
Part No.	Standard Pack: 1,000 per bag			
	"A"	"B" ± .020	"C"	"D"
LEDS1-4-26	1/4 (6.4)	.156 (4)	.047 (1.2)	.06 (1.5)
LEDS1-6-26	3/8 (9.5)			
LEDS1-8-26	1/2 (12.7)			
LEDS2-4-26	1/4 (6.4)	.188 (4.8)	.060 (1.5)	.10 (2.5)
LEDS2-6-26	3/8 (9.5)			
LEDS2-8-26	1/2 (12.7)			
LEDS2-10-26	5/8 (15.9)			
LEDS2-12-26	3/4 (19.1)			
LEDS3-3-26	3/16 (4.8)	.32 (8.1)	—	
LEDS3-4-26	1/4 (6.4)			
LEDS3-6-26	3/8 (9.5)			
LEDS3-8-26	1/2 (12.7)			
LEDS3-10-26	5/8 (15.9)			
LEDS3-12-26	3/4 (19.1)			

F

SQLEDS1/SQLEDS2
Square LED Spacers

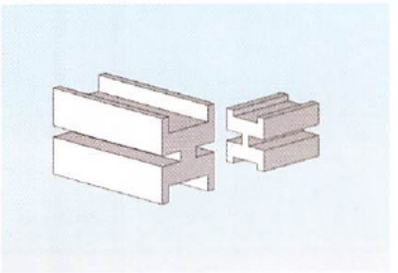

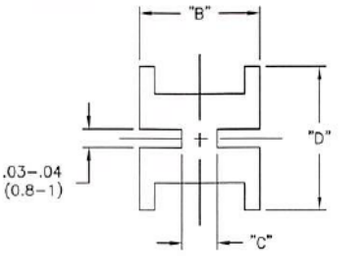

TYPICAL APPLICATIONS

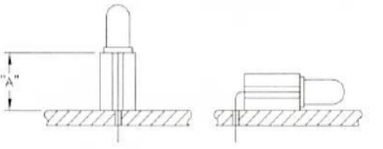

Material: PVC, RMS-26 Color: Black					
Standard Pack: 1,000 per bag					
Part No.	For LED	"A" ±.015 (0.4)	"B"	"C"	"D" REF.
SQLEDS1-4-26	T-1	.250 (6.4)	.17 (4.3)	.03 (0.8)	.17 (4.3)
SQLEDS1-6-26		.375 (9.5)			
SQLEDS1-8-26		.500 (12.7)			
SQLEDS2-4-26	T-1-3/4	.250 (6.4)	.24 (6.1)	.07 (1.8)	.27 (6.9)
SQLEDS2-6-26		.375 (9.5)			
SQLEDS2-8-26		.500 (12.7)			
SQLEDS2-10-26		.625 (15.9)			
SQLEDS2-12-26		.750 (19.1)			

-539-4060 San
Get quote
Angic Global Solutions 1-888-872-0690
https://www.AngicGlobal.com Sales@AngicGlobal.com

LEDC
LED Lens Cover

NEW

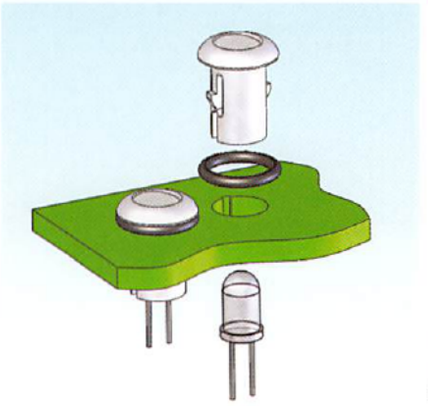

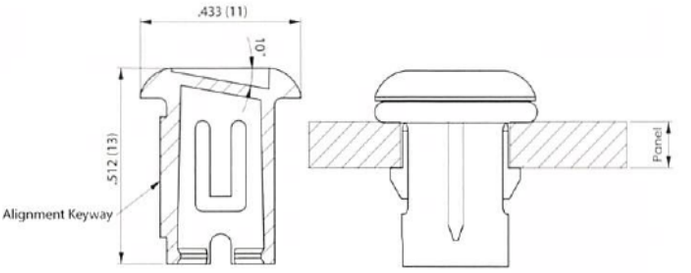

Panel Hole Details

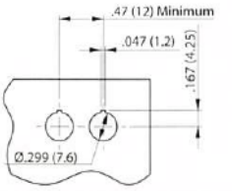

Patent Pending

- Standard 10° lens angle to control light transmission
- Rubber O-Ring gives protection to the LED from dust and water
- Fits standard 5mm T1-3/4 LED, simply snap in place

Material: Polycarbonate, RMS-215 Color: Clear		
Standard Pack: 1000 per bag		
Part No.	**Details**	**O-Ring Material**
LEDC-1	Cover	-
LEDC-2	Cover with O-Ring	Black Neoprene Rubber, RMS-279
Cover supplied with standard 10° angled lens. Custom options available by special order.		

F

LEDM
Metric LED Spacers

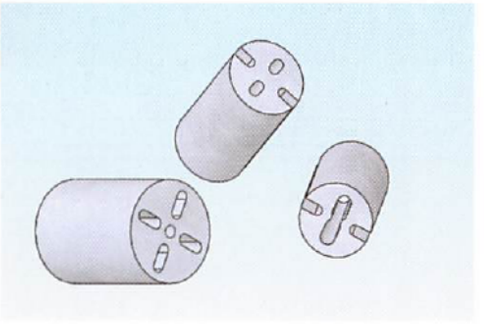

Material: PVC, RMS-176 Color: Black	
Standard Pack: 1,000 per bag	
Part No.	**"L" mm Length**
LEDM-1-L	2 - 30
LEDM-2-L	
LEDM-3-L	
Parts available in 1mm increments. To order, replace "L" with the length.	
Available by special order; 5,000 piece minimum.	

LEDM-1

For T-1 3/4 Series LED

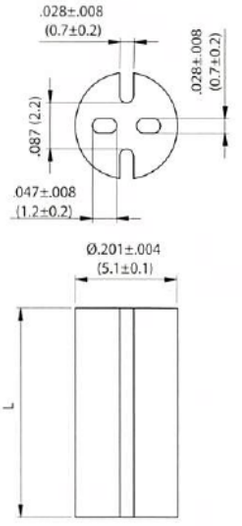

LEDM-2

For T-1 Series LED

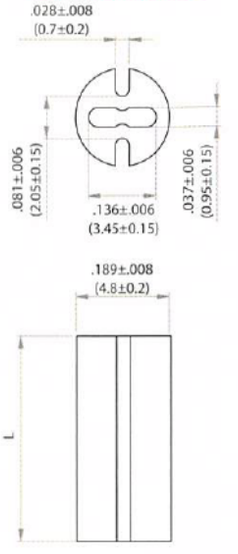

LEDM-3

For T-1 3/4 Series LED

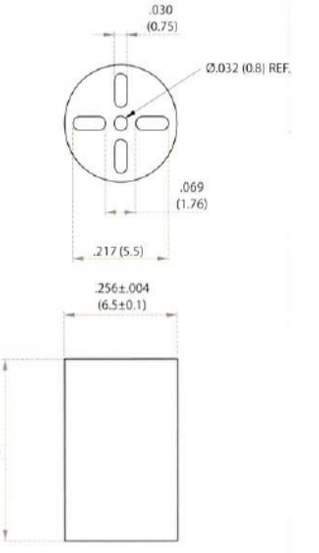

800-621-1892
Angic Global Solutions 1-888-872-0690
https://www.AngicGlobal.com Sales@AngicGlobal.com
Get quote

LEDCR
LED Clips & Rings

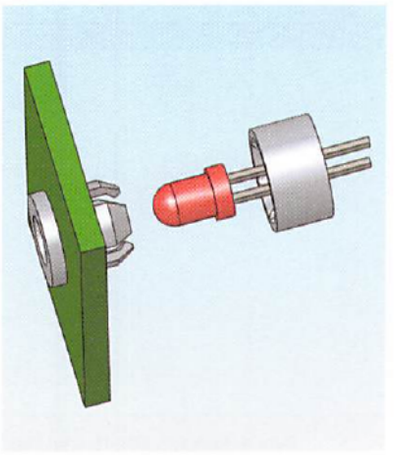

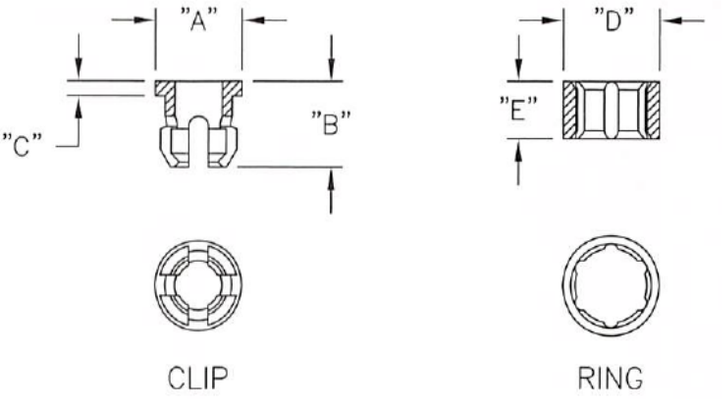

NOTE - Mounting Hole:
LEDCR-104 — .174-.180 (4.4-4.6) Dia.
LEDCR-174 — .267-.273 (6.8-6.9) Dia.
Panel Thickness: .032-.125 (0.81-3.2)

- Parts are sold in a set with both the clip and ring
- Securely and firmly mounts LEDs
- The devices go together by simply inserting the "clip" to the front of the panel, then assembling the LED into the "clip" from the rear of the panel. The "ring" is pressed onto the rear of the "clip" for a firm retention

F

Color: Clear Standard Pack: 1000 per bag										
Part No.	Ring Material	Clip Material	LED Type	Mounting Hole	Panel Thickness	"A" Dia	"B"	"C"	"D" Dia	"E"
LEDCR-104	Nylon 6/6, RMS-43	Nylon 6/6, RMS-43	T-1	.174-.180 (4.4-4.6)	.032-.125	.21 (5.3)	.21 (5.3)	.015 (0.4)	.24 (6.1)	.14 (3.6)
LEDCR-174	Nylon 6/6, RMS-48		T-1-3/4	.267-.273 (6.8-6.9)	(0.81-3.2)	.30 (7.6)	.26 (6.6)	.030 (0.8)	.35 (8.9)	.16 (4.1)

LEDHPM-1
LED Holder; Panel Mount

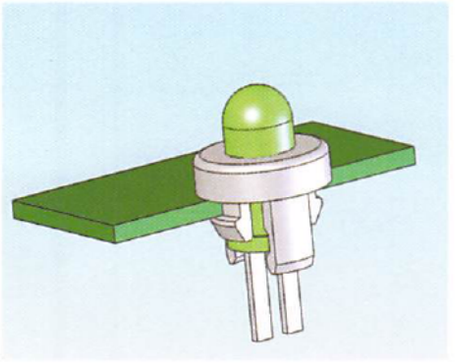

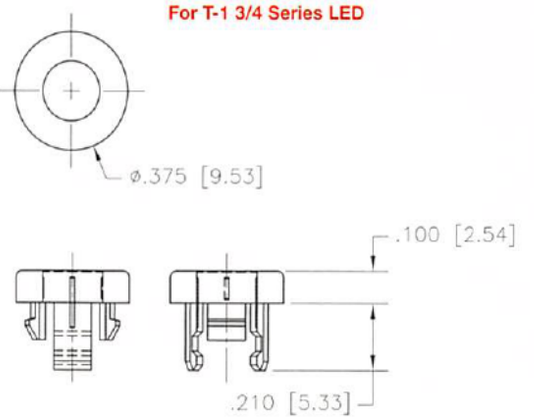

- Easily snaps into standard panel holes
- Once holder is snapped into hole, the LED will lock into place when inserted from the rear of the panel
- Provides secure, attractive display of LED'S

Mounting Hole Diameter: .281-.287 (7.14 - 7.29)
Panel Thickness: .044-.048 (1.12 - 1.22)

Material: Nylon 6/6, RMS-01 Color: Natural
Standard Pack: 1,000 per bag

539-4060 Sam
Get quote
Angic Global Solutions 1-888-872-0690
https://www.AngicGlobal.com Sales@AngicGlobal.com

LEDH
LED Holder

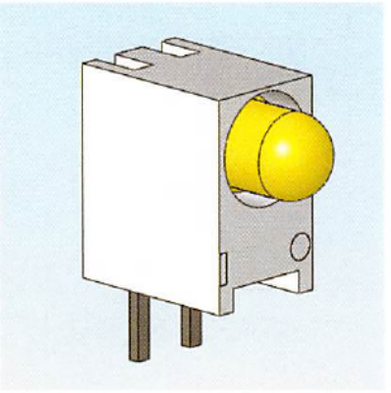

- Allows LEDs to be mounted at a 90 degree angle
- Can be easily assembled by hand with no tooling required

LEDH-101C

For T-1 Series LED

Material: Nylon 6/6, RMS-43 • Color: Black	
Part No.	Standard Pack: 1,000 per bag
	Dia. "D"
LEDH-101C-34	.13 (3.4)
LEDH-101C-38	.15 (3.8)

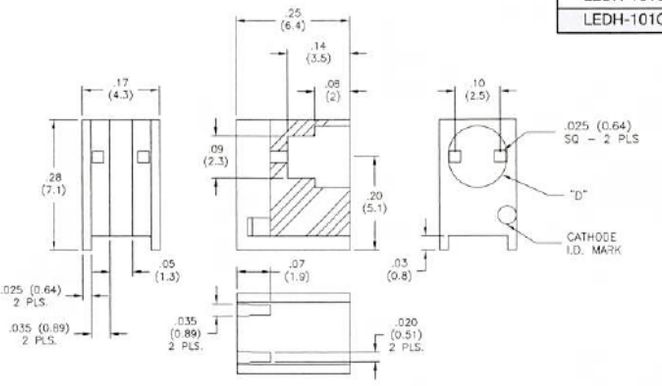

LEDH-909-235

For T-1 3/4 Series LED

Material: Nylon 6/6, RMS-48, Color: Black
Standard Pack: 1,000 per bag

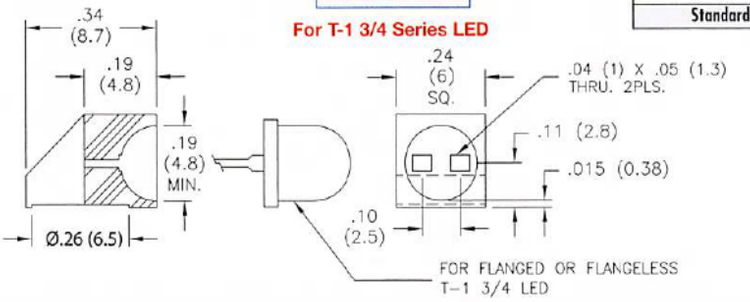

F

RSLP
Light Pipe

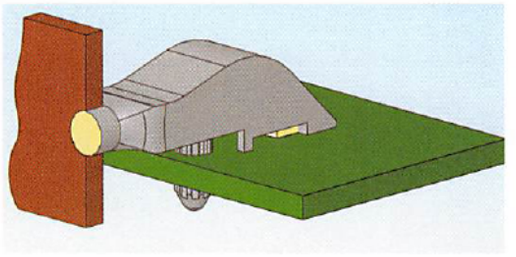

- Ideal for applications in which a surface mount LED is fixed and requires its output re-directed to a front panel.

RSLP1-3

Material: Polycarbonate, RMS-181 Color: Clear
Standard Pack: 1,000 per bag

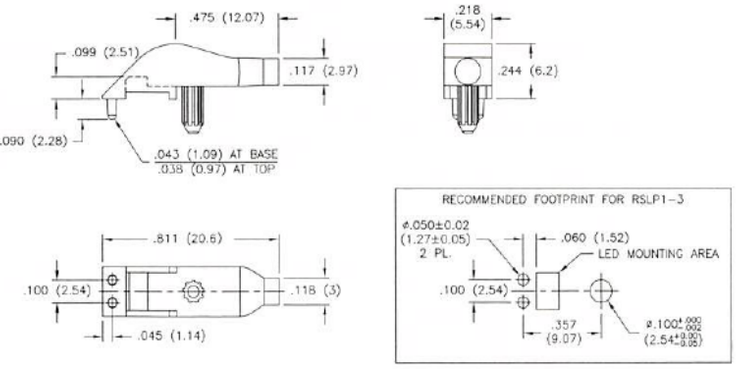

RSLP-1

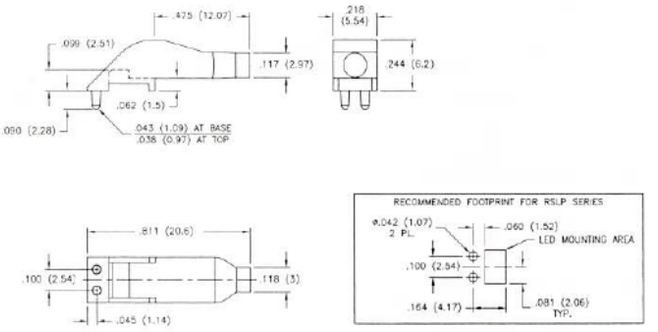

Material: Polycarbonate, RMS-181 Color: Clear
Standard Pack: 1,000 per bag

RSLP-2

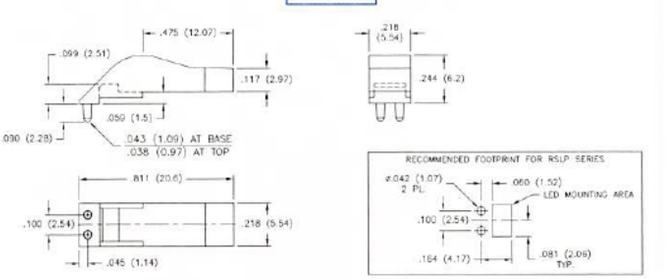

Material: Polycarbonate, RMS-181 Color: Clear
Standard Pack: 1,000 per bag

800-621-1892
Get quote
Angic Global Solutions 1-888-872-0690
https://www.AngicGlobal.com Sales@AngicGlobal.com

General Features

Electrical insulation of components on the PCB and chassis can prevent electrical shock.

Richco offers a range of plastic transistor insulating sleeves, mounts, rings and pads that will fit most standard transistors, fuses and other electrical components.

Richco's insulating products are suitable for high voltage and high temperature applications in which assembly methods such as wave soldering and potting are used. Products for electrical insulation can be used with screws, pin plugs and receptacles.

Typical Applications

- General electronics – Transformers and power supplies
- Industrial electronics

Materials

Most of Richco's insulators come in the following materials.

Material	UL94 Flammability Rating	RoHS Compliance	RMS
PVC	V0	Yes	55
Nylon 6/6	V2	Yes	48
Glass Filled Nylon	HB	Yes	18
Nylon 6	V2	Yes	120
Ceramic	NR	Yes	170

For material details please see individual parts in this section and refer to relevant RMS number which can be found at the end of the catalog.

Introduction

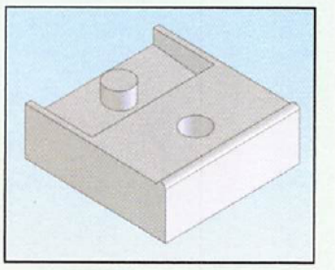

High Temp Transistor Covers

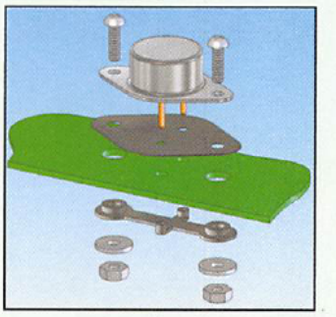

Transistor Insulators

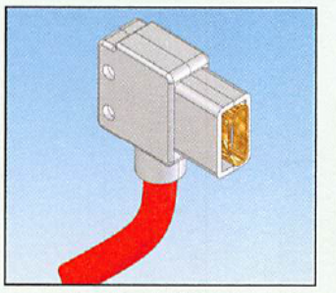

One Touch Sleeve Insulators

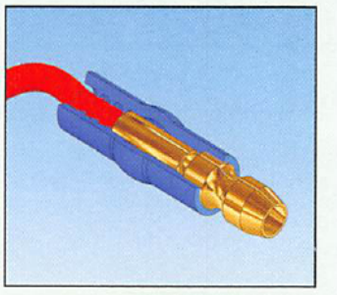

Quick Fit Insulators

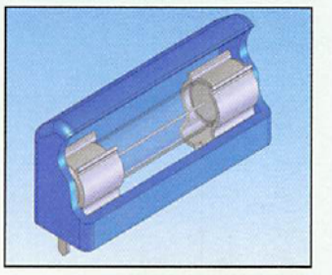

Quick Fit Fuse Covers

G

539-4060 Sam

ANGIC

Get quote

Angic Global Solutions 1-888-872-0690
https://www.AngicGlobal.com Sales@AngicGlobal.com

IEC
Transistor Insulator

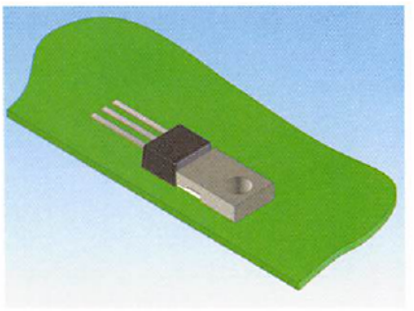

Features
- Separates the mounting screw from the transistor
- Maximum recommended operating temperature 120°F (49°C)

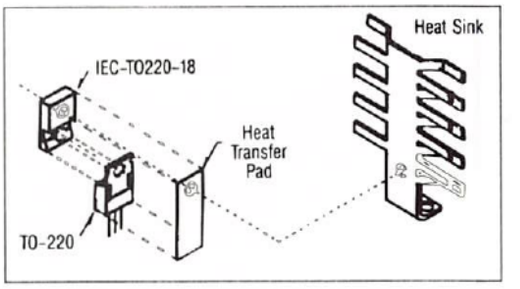

Material: Glass Filled Nylon, RMS-18 Color: Black
Standard Pack: 1,000 per bag

IEC-TO-220-18

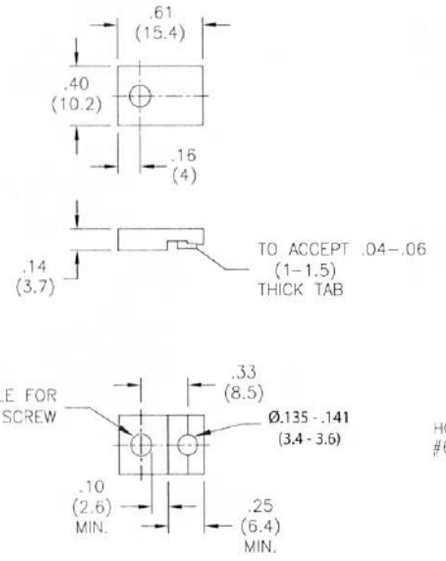

IEC-TO-220V-18

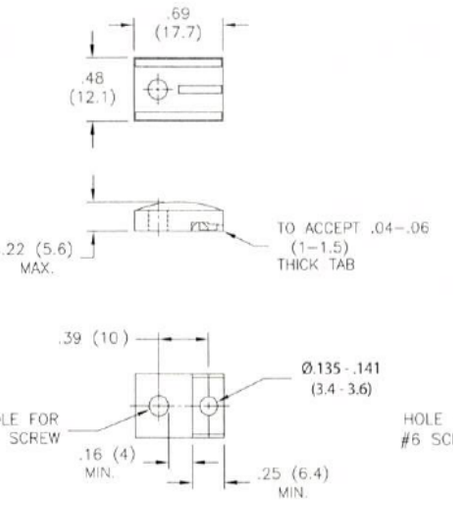

IEC-TO-218

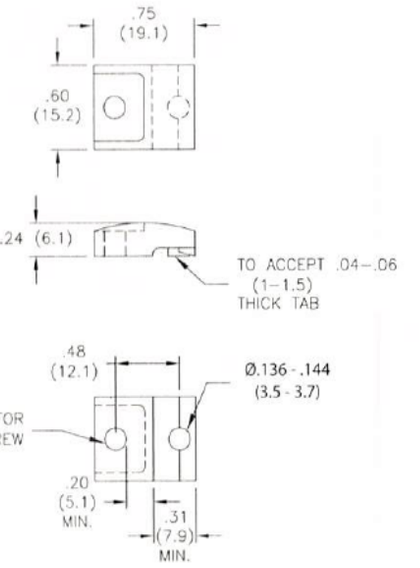

G

HTRTC
High Temp Transistor Cover

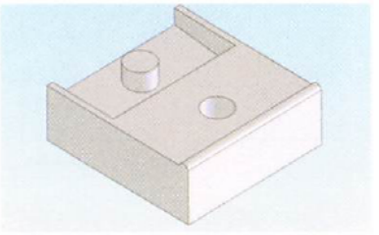

Features
- Maximum recommended operating temperature 266°F (130°C).

HTRTC-1/-2

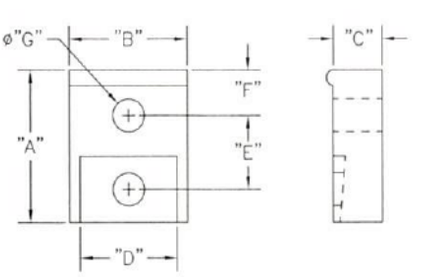

HTRTC-3

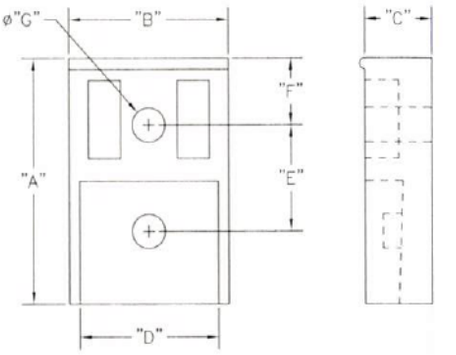

Material: UL94 VO P.B.T, RMS-110 • Color: White									
Part No.	"A"	"B"	"C"	"D"	"E"	"F"	"G"	Transistor Case Style	Package Quantity
HTRTC-1	.63 (16)	.51 (13)	.21 (5.4)	.42 (10.7)	.32 (8)	.19 (4.7)	.14 (3.5)	TO-220	1,000
HTRTC-1A	.76 (19.3)				.39 (10)	.24 (6)	.14 (3.6)		
HTRTC-1C	.70 (17.8)		.22 (5.5)		.37 (9.3)	.19 (4.9)	.14 (3.5)		
HTRTC-2	.75 (19)	.71 (18)	.24 (6)	.65 (16.4)	.41 (10.5)	.20 (5)		TO-218	
HTRTC-3	1.10 (28)	.75 (19)	.32 (8)	.65 (16.5)	.50 (12.8)	.29 (7.4)	.15 (3.9)	TO-3P	200

-800-621-1892
Get quote
Angic Global Solutions 1-888-872-0690
https://www.AngicGlobal.com Sales@AngicGlobal.com

IEC-TO3
Transistor Insulator

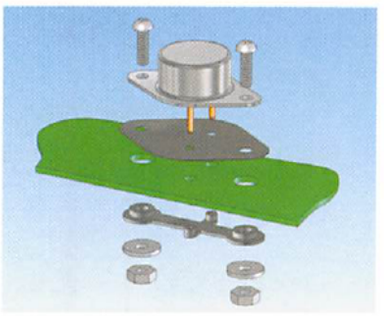

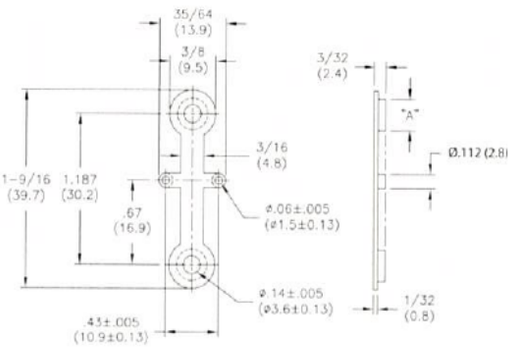

Material: Glass Filled Nylon, RMS-18 Color: Black	
Part No.	Standard Pack: 1,000 per bag
	ø "A"
IEC-TO3-3-18	.184 (4.7) To Fit .187 (4.8) Dia. Hole

Features
- Insulates pins and mounting screws

TO
Transistor Insulator Pad

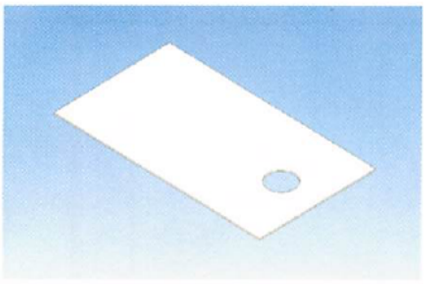

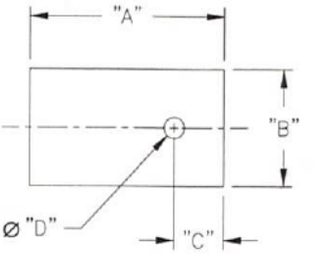

Material: .007 (0.18) Thick Silicone rubber and fiberglass composite, RMS-33 Color: Gray				
Part No.	Standard Pack: 500 per Bag			
	"A"	"B"	"C"	"D"
TO-220-68	1.13 (28.7)	.63 (16)	.20 (5.1)	.145 (3.7)
TO-218-70	1.41 (35.8)	.81 (20.6)	.36 (9.1)	.147 (3.73)

Features
- Offers low resistance to heat transfer while providing electrical insulation between power device and metal parts
- Non-toxic and resists damage from cleaning solvents
- No grease required for installation and resists cracking or fracture
- For use with Richco Part #'s IEC-TO-220, IEC-TO-220V-18, IEC-TO-218 and IEC-TO-3

G

HSR
Heat Sink Spring Mount Rivet

NEW

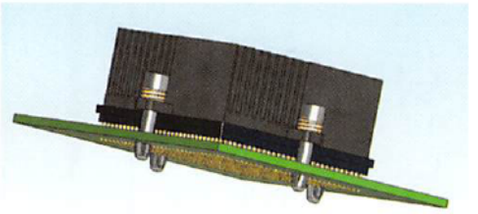

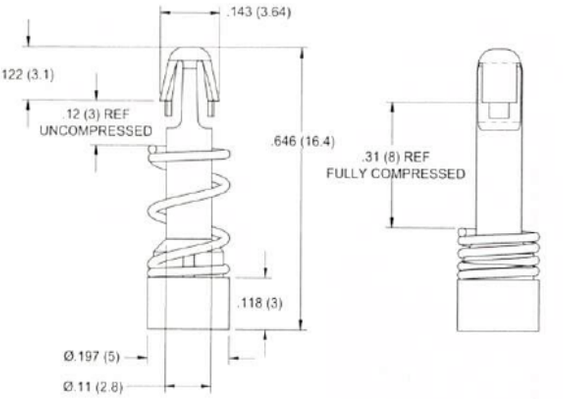

Features
- Fastens a heat sink to a processor chip on a PCB
- The spring provides continuous pressure to the heat sink which improves conductivity
- The rivet is easily installed by hand

Rivet Mat'l: Nylon 6/6, RMS-47 Color: Natural		
Spring Mat'l: Steel, RMS-326 Chrome Plated		
Standard Pack: 1,000 per bag		
Part No.	Heat Sink Hole	Chassis Hole
HSR-1	Inserts through a Ø.125 - .157 (3.18 - 4) Hole	Snap-lock into a Ø.118±.003 (3±0.08) Hole

-539-4060 San
ANGIC
Get quote
Angic Global Solutions 1-888-872-0690
https://www.AngicGlobal.com Sales@AngicGlobal.com

INSULATORS

OF
One Touch Sleeve Insulator

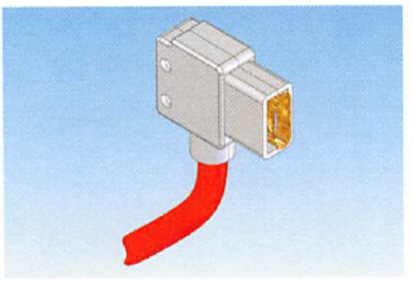

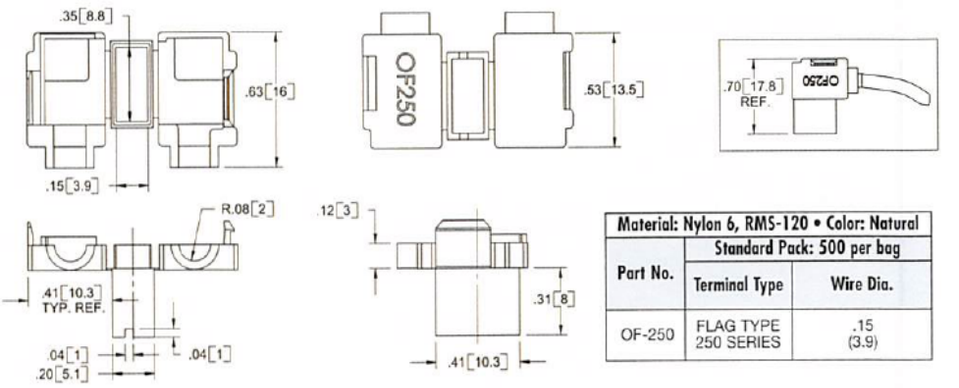

Material: Nylon 6, RMS-120 • Color: Natural		
Part No.	Standard Pack: 500 per bag	
	Terminal Type	Wire Dia.
OF-250	FLAG TYPE 250 SERIES	.15 (3.9)

Features
- For use with pre-assembled wire and receptacle
- For use with flag type receptacle

OS
One Touch Sleeve Insulator

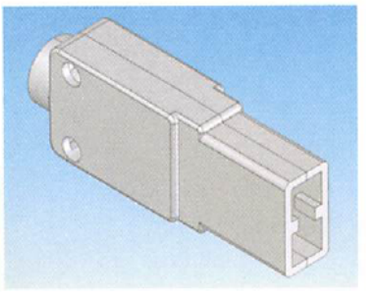

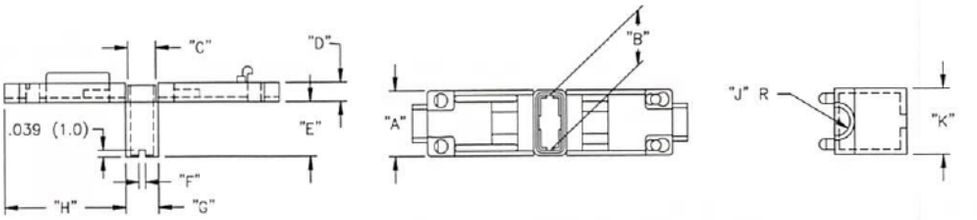

Material: Nylon 6, RMS-120 Color: Natural												
Standard Pack: 500 per bag												
Part No	Terminal Type	Wire Dia.	"A"	"B"	"C"	"D"	"E"	"F"	"G"	"H"	"J"	"K"
OS-187	Straight Type 187 Series	9/64 (3.6)	.346 (8.4)	.240 (6.1)	.138 (2.6)	.102 (2.6)	.268 (6.8)	.039 (1)	.153 (4.2)	.594 (17.6)	.071 (1.8)	.295 (7.5)
OS-250	Straight Type 250 Series	5/32 (3.8)	.378 (9.6)	.315 (8)	.134 (3.4)	.110 (2.8)	.315 (8)	.039 (1)	.197 (5)	.728 (18.5)	.075 (1.9)	.378 (9.6)
Available by special order; 5,000 piece minimum.												

Features
- For use with straight type receptacle

248XXX
Quick Fit Insulator

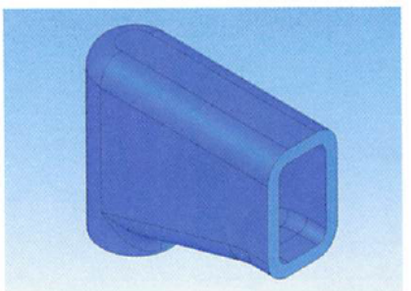

- UL #E120063

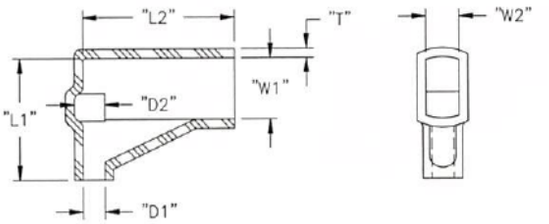

Material: Soft PVC, RMS-55 Color: Transparent Blue											
Standard Pack: 1,000 per bag											
Part No	Wire O.D. Range	Wire Gauge	"D1"	"D2"	"L1" ± .04 (1.0)	"L2" ± .04 (1.0)	"W1"	"W2"	"T"	ID No. On Part	Connector Series
248532	.071-.126 (1.8-3.2)	18-16	.13 (3.2)	.17 (4.2)	.53 (13.5	.69 (17.5)	.34 (8.5)	.18 (4.5)	.04 (1)	S63	250
248548	.113-.190 (2.9-4.8)	14-12	.19 (4.8)	.23 (5.8)						S65	

Features
- Insulates and protects flag type receptacles

1-800-621-1892
Get quote
Angic Global Solutions 1-888-872-0690
https://www.AngicGlobal.com Sales@AngicGlobal.com

224210
Splashproof Insulator

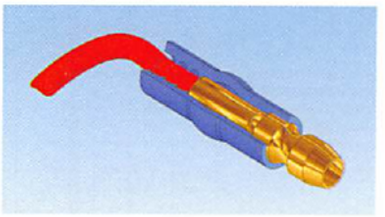

- UL #E120063

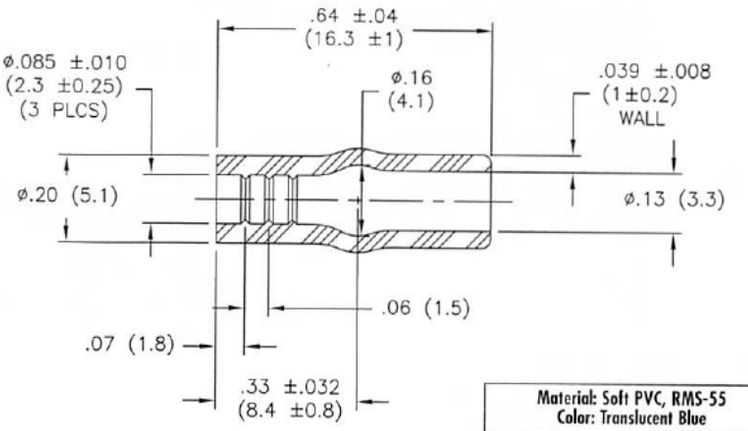

Features

- Provides terminal with splashproof seal to guard against contamination
- Transparent material allows visual inspection of terminal
- Recommended wire O.D. .088-.120 (2.2-3.1)

Material: Soft PVC, RMS-55 Color: Translucent Blue
Standard Pack: 1,000 per bag

215010
Splashproof Insulator

- UL #E120063

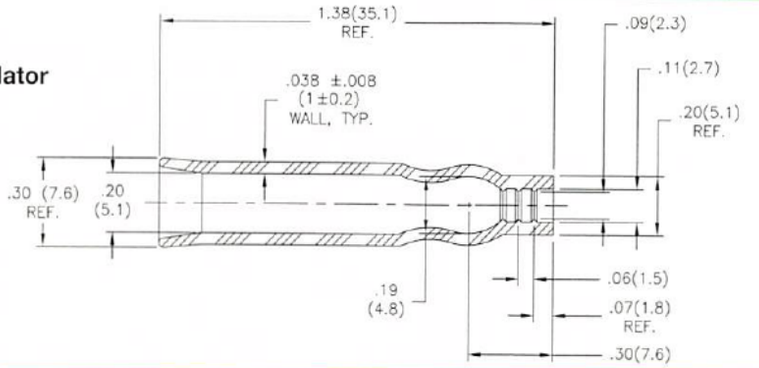

Material: Soft PVC, RMS-55 Color: Translucent Blue
Standard Pack: 1,000 per bag

224XXX
Quick Fit Insulator

- UL #E120063

Features

- Replaces heat shrink tubing and are ideal for use on all standard types of terminals
- Lower installed cost than heat shrink tubing

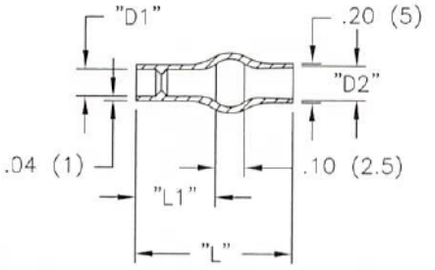

Material: Soft PVC, RMS-55 Color: Transparent Blue Standard Pack: 1,000 per bag						
Part No	Wire O.D. Range	Wire Gauge	"D1"	"D2"	"L1" ± .04 (1.0)	"L" ± .04 (1.0)
224225	.058-.091 (1.47-2.31)	22-18	.10 (2.5)	.16 (4.1)	.24 (6.1)	.51 (13)
224228			.11 (2.8)	.18 (4.6)	.28 (7.1)	
224230	.068-.113 (1.73-2.87)	20-18	.12 (3)	.16 (4.1)	.24 (6.1)	

215XXX
Quick Fit Insulator

- UL #E120063

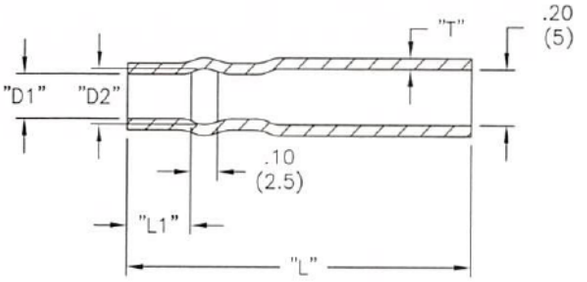

Material: Soft PVC, RMS-55 Color: Transparent Blue Standard Pack: 1,000 per bag							
Part No	Wire O.D. Range	Wire Gauge	"D1"	"D2"	"L1" ± .04 (1.0)	"L" ± .04 (1.0)	"T"
215025	.058-.091 (1.47-2.31)	22-18	.10 (2.5)	.16 (4.1)	.24 (6.1)	1.30 (33)	.04 (1)
215028			.11 (2.8)	.18 (4.6)		1.34 (34)	
215030	.068-.113 (1.73-2.87)	20-18	.12 (3)	.16 (4.1)		1.30 (33)	
215032	.071-.126 (1.8-3.2)	18-16	.13 (3.3)	.18 (4.6)	.28 (7.1)	1.34 (34)	
215035	.071-.140 (1.8-3.56)	18-14	.14 (3.6)	.16 (4.1)	.24 (6.1)	1.30 (33)	

39-4060 Samp
Get quote
Angic Global Solutions 1-888-872-0690
https://www.AngicGlobal.com Sales@AngicGlobal.com

235XXX
Quick Fit Insulator

- UL #E120063

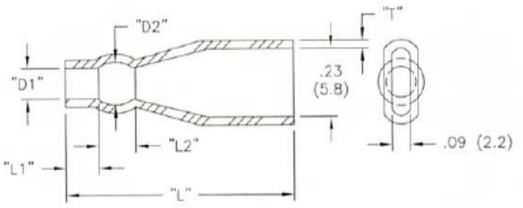

Material: Soft PVC, RMS-55 Color: Transparent Blue								
Standard Pack: 1,000 per bag								
Part No	Wire O.D. Range	Wire Gauge	"D1"	"D2"	"L1" ± .04 (1.0)	"L2"	"L" ± .04 (1.0)	"T"
235830	.058-.091 (1.47-2.31)	20-18	.12 (3)	.16 (4.1)	.20 (5.1)	.10 (2.5)	.91 (23.1)	.03 (0.8)
235835	.071-.140 (1.8-3.6)	18-14	.14 (3.6)	.18 (4.6)		.12 (3)		

238XXX
Quick Fit Insulator

- UL #E120063

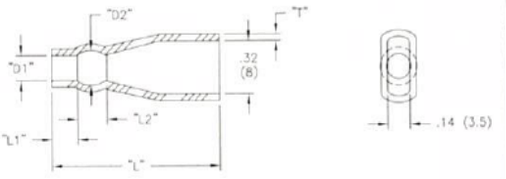

Material: Soft PVC, RMS-55 Color: Transparent Blue								
Standard Pack: 1,000 per bag								
Part No	Wire O.D. Range	Wire Gauge	"D1"	"D2" Ref.	"L1" ± .04 (1.0)	"L2" Ref.	"L" ± .04 (1.0)	"T"
238020	.058-.080 (1.5-2)	24-20	.08 (2)	.13 (3.3)	.20 (5.1)	.12 (3)	.95 (24.1)	.04 (1)
238025	.058-.091 (1.5-2.3)	22-18	.10 (2.5)	.18 (4.6)				
238032	.071-.126 (1.8-3.2)	18-16	.13 (3.3)	.19 (4.8)		.10 (2.5)		
238035	.071-.140 (1.8-3.6)	18-14	.14 (3.6)	.18 (4.6)		.12 (3)		
238040	.091-.140 (2.3-3.6)	16-14	.16 (4.1)	.20 (5.1)		.12 (3)	.97 (24.6)	
238048	.113-.190 (2.9-4.8)	14-12	.19 (4.8)	.25 (6.3)		.10 (2.5)	.98 (24.9)	
238060	.182-.214 (4.6-5.4)	12-10	.24 (6.1)	.30 (7.6)	.28 (7)	.10 (2.5)	1.14 (29.0)	

G

840xxx
Quick Fit Fuse Cover

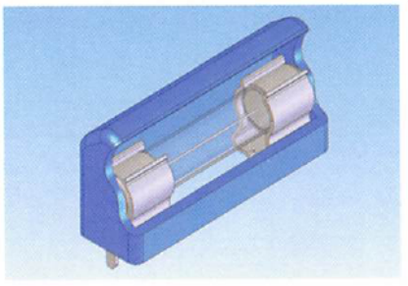

- UL #E120063

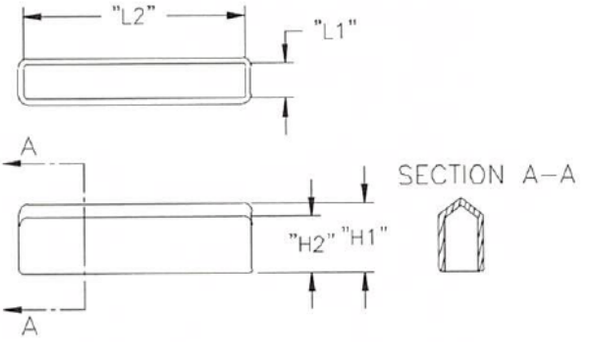

Features
- Used to protect PCB-mounted fuse clips

Material: Flexible PVC, RMS-55 • Color: Transparent Blue					
Part No.	Standard Pack: 1,000 per bag				
	"H1" Ref.	"H2" Ref.	"L1"	"L2"	Fuse Type
840620	1/2 (12.7)	0.391 (9.9)	.24 (6.1)	.79 (20.1)	METRIC
840730	1/2 (12.7)	0.391 (9.9)	.28 (7.1)	1.18 (30)	
840832	5/8 (15.9)	0.578 (14.7)	.32 (8.1)	1.26 (32)	
840836	1/2 (12.7)	0.391 (9.9)	.32 (8.1)	1.42 (36.1)	STD 0.25X1.25

1-800-621-189
Get quote
Angic Global Solutions 1-888-872-0690
https://www.AngicGlobal.com Sales@AngicGlobal.com

FCE-5-19
Fuse Cover

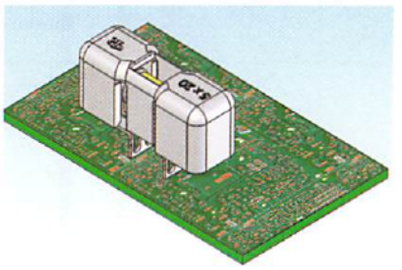

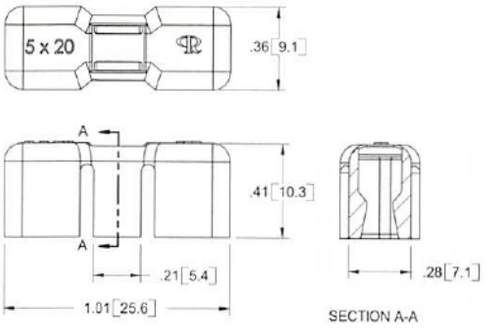

Features

- Provides protection of the fuse when maintenance needs to take place on surrounding components
- Square viewing area gives quick identification of blown fuses
- Easily installed onto the fuse and fuse holder

Material: UL94 VO Nylon 6/6, RMS-19 Color: Natural	
Part No.	Standard Pack: 1,000 per Bag
	Mounting Fuse Size
FCE-5-19	Snap-fit onto a .20 x .79 (5 x 20) fuse

FH/FC
Fuse Holder & Cover

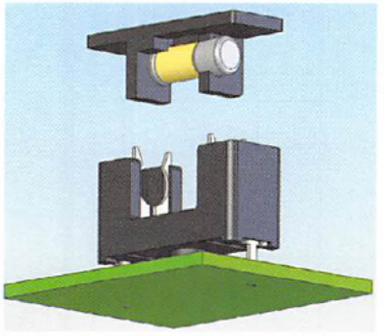

FH-320-NV

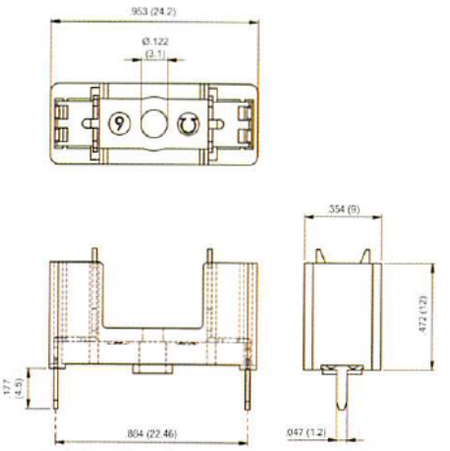

FC-320-NV

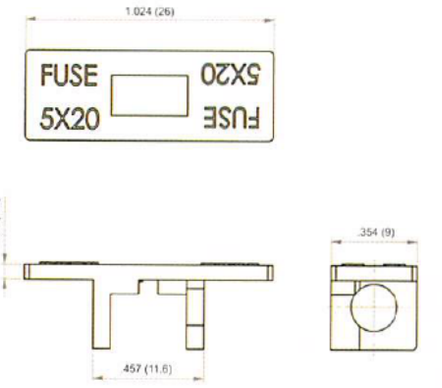

Features

- Protects live components from damaging, unintentional contact
- Design makes fuse replacement safe and easy
- To assemble, simply insert fuse into fuse cover; lock in place with a 1/4 turn; place fuse cover in fuse holder

Mat'l: Nylon 6/6 25% Glass Filled, RMS-49; Pin Mat'l: Brass/ Nickel, RMS-289 Tin Plated, RMS-217
Standard Pack: 1,000 per bag

CER
Ceramic Beads

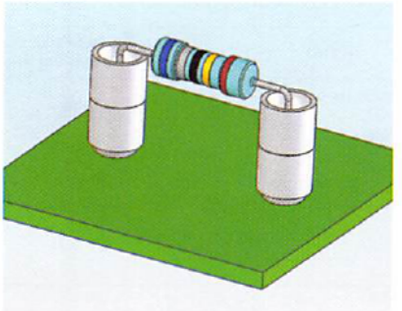

Style 1

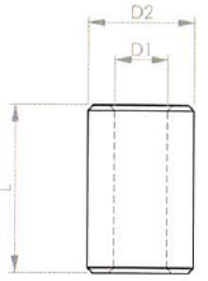

Style 2

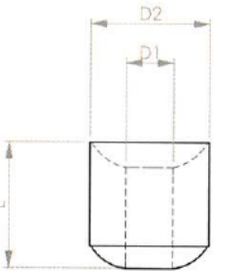

Style 3

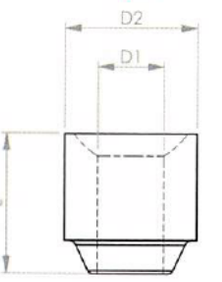

Features

- Parts are serviceable to 1832°F (1000°C)
- Parts are stackable as seen in application photo

CER		Standard Pack: 1,000 per bag		
Mat'l: Steatite C220 Ceramic, RMS-170 Color: Natural	"D1"	"D2"	"L"	STYLE
CER-1	.079 (2)	.158 (4)	.237 (6)	1
CER-2	.063 (1.6)	.178 (4.5)	.315 (8)	
CER-3			.394 (10)	
CER-4	.040 (1)	.119 (3)	.119 (3)	2
CER-5	.071 (1.8)	.178 (4.5)	.178 (4.5)	
CER-6	.040 (1)	.119 (3)	.197 (5)	
CER-7	.098 (2.5)	.197 (5)		3

G

ANGIC GLOBAL SOLUTIONS
Get quote
Angic Global Solutions 1-888-872-0690
https://www.AngicGlobal.com Sales@AngicGlobal.com

MNI
Molded Nylon Insulator

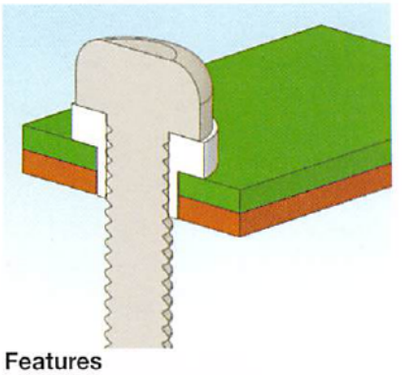

Features

- Use as screw insulators and in bushing applications
- Reduce vibration
- Strong and corrosion resistant

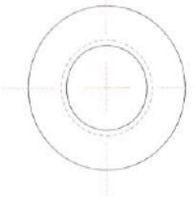

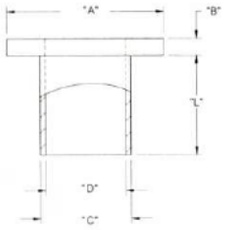

MNI					Standard Pack: 1,000 per bag		
Mat'l: Nylon 6/6, RMS-48 Color: Natural	Screw Size	"L" ±.015 (0.38)	"A" ±.007 (0.18)	"B" ±.007 (0.18)	"C" ±.005 (0.13)	"D" ±.005 (0.13)	Material
MNI#2-2	#2	.031 (0.8)	.181 (4.6)	.047 (1.2)	.120 (3)	.090 (2.3)	RMS-48
MNI#2-4		.063 (1.6)					
MNI#4-2	#4	.031 (0.8)	.235 (6)		.145 (3.7)	.115 (2.9)	RMS-01
MNI#4-3		.046 (1.2)					
MNI#4-4		.063 (1.6)					
MNI#4-5		.084 (2.1)	.252 (6.4)		.140 (3.6)		RMS-48
MNI#4-6		.093 (2.4)	.235 (6)		.145 (3.7)		RMS-01
MNI#4-10		.156 (4)					RMS-48
MNI#4-12		.187 (4.7)					RMS-01
MNI#4-16		.250 (6.4)					
MNI#4-24		.375 (9.5)					RMS-48
MNI#5-3	#5	.046 (1.2)	.370 (9.4)		.236 (6)	.128 (3.3)	
MNI#6-2	#6	.031 (0.8)	.290 (7.4)		.170 (4.3)	.140 (3.6)	
MNI#6-4		.063 (1.6)					
MNI#6-6		.093 (2.4)					
MNI#6-8		.125 (3.2)					
MNI#6-12		.187 (4.7)					
MNI#6-16		.250 (6.4)					
MNI#6-24		.375 (9.5)					
MNI#8-2	#8	.031 (0.8)	.344 (8.7)	.063 (1.6)	.205 (5.2)	.173 (4.4)	
MNI#8-4		.063 (1.6)					
MNI#8-6		.093 (2.4)					
MNI#8-8		.125 (3.2)					
MNI#8-12		.187 (4.7)					
MNI#8-16		.250 (6.4)					
MNI#8-24		.375 (9.5)					
MNI#8-32		.500 (12.7)					
MNI#10-4	#10	.063 (1.6)	.399 (10.1)		.260 (6.6)	.200 (5.1)	
MNI#10-6		.093 (2.4)					
MNI#10-8		.125 (3.2)					
MNI#10-12		.187 (4.7)					
MNI#10-16		.250 (6.4)					
MNI#10-24		.375 (9.5)					
MNI#10-32		.500 (12.7)					
MNI 1/4-6	1/4	.093 (2.4)	.513 (13)	.065 (1.7)	.312 (7.9)	.260 (6.6)	
MNI 1/4-16		.250 (6.4)					
MNI 1/4-24		.375 (9.5)					
MNI 1/4-32		.500 (12.7)					
MNI 5/16-6	5/16	.093 (2.4)	.620 (15.7)	.063 (1.6)	.360 (9.1)	.320 (8.1)	
MNI 5/16-16		.250 (6.4)					
MNI-M2.5-1.3	M2.5	.051 (1.3)	.248 (6.3)	.047 (1.2)	.138 (3.5)	.114 (2.9)	RMS-01
MNI-M2.5-3.6		.142 (3.6)	.280 (7.1)	.059 (1.5)	.150 (3.8)	.110 (2.8)	
MNI M3-1.0	M3	.039 (1)		.039 (1)		.122 (3.1)	RMS-48
MNI-M3-1.3		.051 (1.3)	.366 (9.3)	.047 (1.2)	.236 (6)	.126 (3.2)	RMS-01
MNI M3-2.5		.098 (2.5)	.280 (7.1)	.039 (1)	.150 (3.8)	.122 (3.1)	RMS-48
MNI M3-3.5		.137 (3.5)					

R900
Nylon Spacer 900 Series

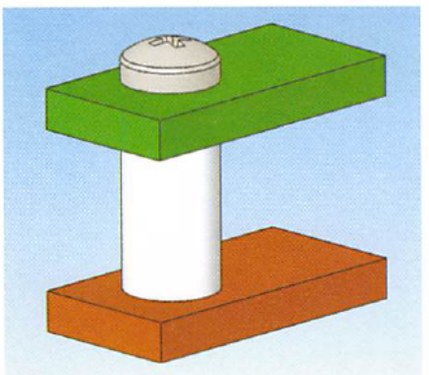

Features

- Mount printed circuit board components in almost any lead pattern and elevation

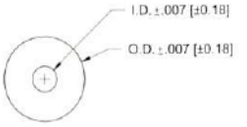

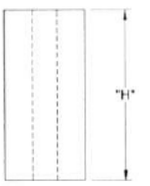

"X"	"H" Spacer Height	"H" Tolerance
1	1/16 (1.6)	±.007
2	1/8 (3.2)	
3	3/16 (4.8)	
4	1/4 (6.4)	
5	5/16 (7.9)	
6	3/8 (9.5)	
7	7/16 (11.1)	
8	1/2 (12.7)	

R900		Standard Pack: 1,000 per bag
Mat'l: Modified Nylon 6, RMS-60 Color: White	ID ± .007	OD ± .007
R901-X	.028 (0.7)	.085 (2.2)
R938-X	.032 (0.8)	
R902-X		.125 (3.2)
R939-X	.047 (1.2)	
R937-X	.090 (2.3)	
R906-X	.085 (2.2)	.148 (3.6)
R903-X	.047 (1.2)	.156 (4)
R907-X	.105 (2.7)	.167 (4.2)
R904-X	.063 (1.6)	.187 (4.8)
R913-X	.091 (2.3)	
R908-X	.125 (3.2)	
R910-X	.091 (2.3)	.250 (6.4)
R911-X	.125 (3.2)	
R905-X	.147 (3.7)	
R912-X	.171 (4.3)	

1-800-621-1892
Get quote
Angic Global Solutions 1-888-872-0690
https://www.AngicGlobal.com Sales@AngicGlobal.com

R
Snap In Bearing

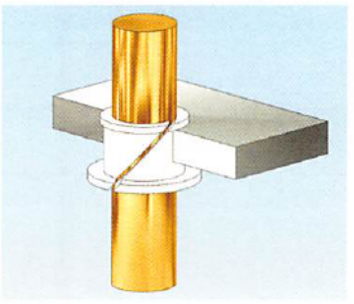

Part No.	Material: Nylon 6/6, RMS-48 • Color: White Standard Pack: 1,000 per Bag Maximum Shaft Dia.	Minimum* Housing Bore	Bearing I.D.** +.003/-.000	Flange Diameter ±1/64 "F"	Flange Diameter ±1/64 "S"	Bearing Length "L" +.015/-.000	Recommended Plate Thickness "T"
R3L1-C	3/16	.234	.189	5/16	1/4	.078	.040 - .075
R3L2-C						.140	.072 - .135
R4L1-C	1/4	5/16	.251	7/16	11/32	.078	.040 - .075
R5L1-C	5/16	3/8	.314	1/2	13/32	.078	.040 - .075
R6L2-C	3/8	7/16	.376	9/16	15/32	140	.072 - .135
R12L1-C	3/4	13/16	.751	1	27/32	.078	.040 - .075

* The minimum clearance for snap-in bearings is .001". However, snap in bearings can be used with shaft diameters a few thousands larger or smaller than shown if housing bore is varied a corresponding amount

** When installed in Housing Bore diameter shown

Features

- Effective in damping out noise and vibration
- Does not require lubrication
- Axial slot helps maintain proper fit and compensate for humidity and temperature changes

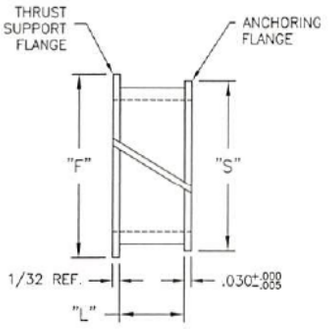

Installation

Bearings should always be installed in a housing bore that provides good support for the bearing.

When operated continuously without lubrication at the maximum permissible speed of 500 rpm, should have hardened or plated shafts in the bearing area to minimize shaft wear.

Unhardened stainless steel shafts are not recommended. Use chromium plated or nickel plated shafts where corrosion is a problem.

Correct Clearances

Housing bore diameters should not be smaller than the minimum diameters specified in tables presented in this catalog. To check bearing I.D.'s for clearance, the bearing should be installed in its housing bore. Plug gauges with diameters corresponding to the minimum and maximum recommended I.D.'s can be used to determine whether the clearance is correct for the bearing when operated on recommended shaft.

When bearings must operate in liquids, the wall thickness of the bearing will increase due to absorption of liquid. Wall thicknesses also increase when bearings are used in a consistently humid environment.

The compensation gap allows for the bearing to be collapsed sufficiently so that the small flange can be easily spiraled through the mounting hole. Position the bearing over the hole with the gap facing up. With light finger pressure immediately to the left of the compensation gap, the bearing is spiraled into position.

Bearings perform effectively in temperature ratings from -40°F to +200°F. Bearing load ratings to 8,000 PSI and speed ratings up to 2,000 feet per minute insure durability.

G

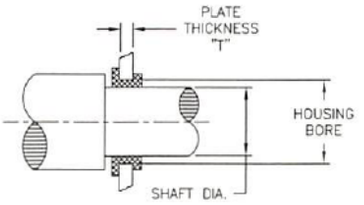

LOAD RATINGS

Radial Load Capacity in Pounds of various RPM (Non-Lubricated)						
Bearing No.	Nominal Brg. I.D.	Static	10 RPM	50 RPM	100 RPM	250 RPM
R3L1-C	3/16	24	4	4	3	2
R3L2-C		48	9	8	6	4
R4L1-C	1/4	32	5	5	4	2
R5L1-C	5/16	40	8	6	4	2
R6L2-C	3/8	96	19	15	10	4
R12L1-C	3/4	100	20	14	6	2.5

539-4060 Sam 05
ANGIC
Get quote
Angic Global Solutions 1-888-872-0690
https://www.AngicGlobal.com Sales@AngicGlobal.com

Notes

800-621-1892
Get quote
Angic Global Solutions 1-888-872-0690
https://www.AngicGlobal.com Sales@AngicGlobal.com

General Features

Cable ties and accessories are important in the harnessing of cable in an application, or for securing cable from one application to another at a distance. Our cable ties can be fixed to the PCB, chassis, or even to a wall in order to harness cable at any application level. We have different colors, materials, sizes and mounting types available. A full supporting cast of accessories, bases, marker ties and holders are available. Cable tie options include push-in arrowhead mount, screw mount, hook and loop, releasable, marker and heavy duty.

Typical Applications

- Automotive - Cable harnesses
- Office Equipment - Secures trailing power cables
- Security
- Brown Goods/Consumer Electronics - Audio and video equipment
- White Goods - Washing machines, ovens

Custom Options

Materials

Richco's cable ties are offered in a variety of materials. Popular cable ties are available in most materials as standard. Other sizes and types may be available by special order with a minimum order quantity (MOQ). Contact your local Richco office to discuss your requirements.

Material	Flammability Rating	RoHS Compliance	RMS
Nylon 6/6	V2	Yes	01
Nylon 6/6	V0	Yes	75
UVB Nylon 6/6	V2	Yes	46
Nylon 4/6	V2	Yes	109
Nylon 6/6	V2	Yes	47

Special Packaging

Richco cable ties come standard packed in either bags of 100 or 1,000 pieces. If you require products to be packed in different quantities please contact your local Richco office and this can be discussed as a special order. An MOQ may apply.

Color

Cable ties can be molded in a variety of colors; green, blue, red, and black are standard. We can also color match if given a Pantone or RAL color number. Because of the specific level of moisture necessary for proper application and performance, Richco does not Rit-dye cable ties.

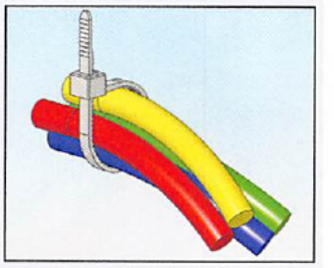

Standard Wrap-It Ties

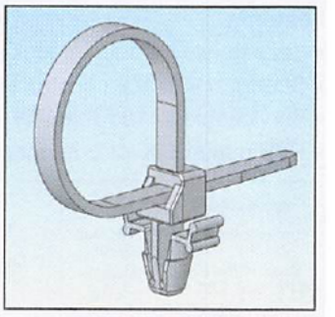

Arrowhead Wrap-It Ties

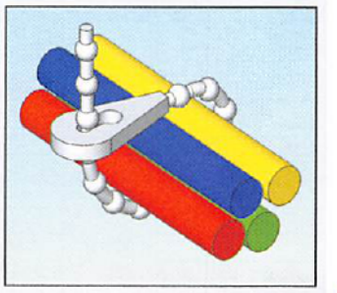

Releasable Ties

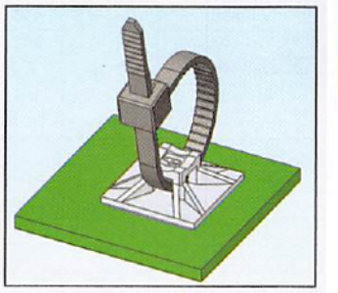

Tie Holders

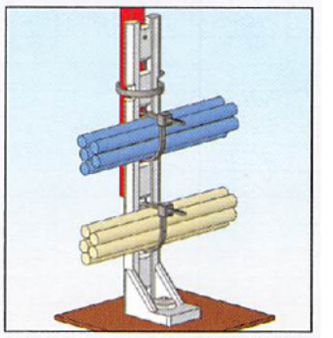

Tie Holders

39-4060 Samp
ANGIC
Get quote
Angic Global Solutions 1-888-872-0690
https://www.AngicGlobal.com Sales@AngicGlobal.com

WIT
Wrap-It Ties

• WIT-18, WIT-30, WIT-50, AND WIT-120 are UL Registered under UL#E71558

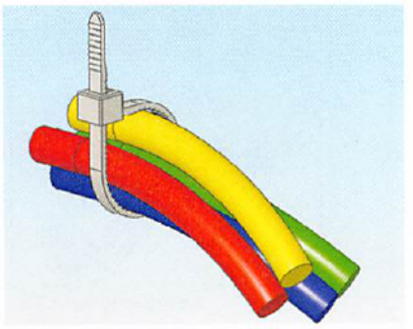

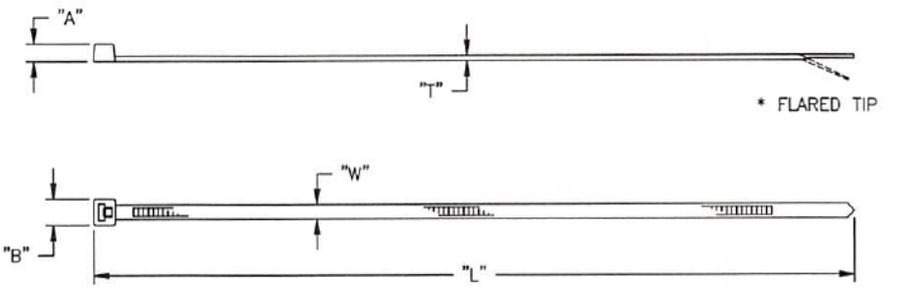

Features
- Easy to use permanent lock
- Strong, one-piece construction
- Serviceable to 185°F (85°C)
- UVB material is for outdoor applications

Part Number Example			
Part No. Prefix	**Material**	**Std. Pack Suffix**	**Complete Part No.**
WIT-40S	Standard is Nylon 6/6, no material portion is needed in the part number	-M	WIT-40S-M
WIT-18R	-UVB	-C	WIT-18R-UVB-C
WIT-30L	-V0	-M	WIT-30L-V0-M

Part No. Prefix Standard Material: Nylon 6/6, RMS-01 Color: Natural	Min. Loop Tensile Strength lb (kg)	"L" Length Ref.	Max. Bundle Diameter	"W" Width Ref.	"T" Thickness Ref.	"A" Head Thickness	"B" Head Width	Material Variations UVB Nylon 6/6, RMS-46 Color: Black*	Material Variations UL94 V0 Nylon 6/6, RMS-75A Color: White	Standard Package Suffix Standard Package Quantities			
								-UVB	-V0	-L	-C	-D	-M
WIT-18 Series													
WIT-18SF*	18 (8)	3.25 (82.6)	.63 (15.9)	.10 (2.5)	.04 (1)	.15 (3.8)	.19 (4.8)	Standard	Special	N/A	100	N/A	1,000
WIT-18R*		4.52 (114.8)	.75 (19.1)						Standard				
WIT-18L*		5.75 (146.1)	1.38 (35.1)						N/A				
WIT-18V*		8.00 (203.2)	2.13 (54.1)		.06 (1.5)	.16 (4.1)	.21 (5.3)						
WIT-18X*		15.50 (393.7)	4.50 (114.3)										
WIT-30 Series													
WIT-30S	30 (13)	4.50 (114.3)	.75 (19.1)	.14 (3.6)	.05 (1.3)	.17 (4.3)	.25 (6.4)	Standard	Special	N/A	100	N/A	1,000
WIT-30R		5.75 (146.1)	1.25 (31.8)						Standard				
WIT-30L		7.56 (192)	1.88 (47.8)						N/A				
WIT-30XL		8.06 (204.7)	2.00 (50.8)										
WIT-30VL*		11.16 (283.4)	3.19 (81)										
WIT-40 Series													
WIT-40S	40 (18)	4.50 (114.3)	.75 (19.1)	.14 (3.6)	.05 (1.3)	.17 (4.3)	.25 (6.4)	Standard	Special	N/A	100	N/A	1,000
WIT-40R		5.75 (146.1)	1.25 (31.8)										
WIT-40L		7.56 (192)	1.88 (47.8)						N/A				
WIT-40XL		8.06 (204.7)	2.00 (50.8)										
WIT-40VL*		11.16 (283.4)	3.19 (81)										
WIT-50 Series													
WIT-50S	50 (22)	6.00 (152.4)	1.50 (38.1)	.19 (4.8)	.05 (1.3)	.21 (5.3)	.31 (7.9)	Standard	Special	N/A	100	N/A	1,000
WIT-50R		8.00 (203.2)	2.00 (50.8)						Standard				
WIT-50L		15.40 (391.2)	4.50 (114.3)						N/A				
WIT-60 Series													
WIT-60R	60 (27)	10.75 (273.1)	2.75 (69.9)	.18 (4.6)	.05 (1.3)	.20 (5.1)	.32 (8.1)	Standard	Standard	N/A	100	N/A	1,000
WIT-70 Series													
WIT-70S	70 (31)	24.00 (609.6)	7.31 (185.7)	.19 (4.8)	.08 (2)	.20 (5.1)	.36 (9.1)	Standard	Special	N/A	100	N/A	N/A
WIT-70R		30.00 (762)	9.12 (231.6)										
WIT-70L		36.00 (914.4)	11.00 (279.4)						N/A				
WIT-120 Series													
WIT-120S	120 (54)	8.50 (215.9)	2.00 (50.8)	.30 (7.6)	.07 (1.8)	.29 (7.4)	.51 (13)	Standard	Special	N/A	100	500	N/A
WIT-120R		15.06 (382.5)	4.25 (108)										
WIT-120L		21.25 (539.8)	6.37 (161.9)						N/A				
WIT-175 Series													
WIT-175S	175 (79	15.00 (381)	4.18 (106.2)	.35 (8.9)	.08 (2)	.32 (8.1)	.55 (14)	N/A	N/A	N/A	100	N/A	N/A
WIT-175R		23.00 (584)	6.75 (171.5)							50			
WIT-175L		33.00 (838.2)	9.75 (247.7)					Standard					
WIT-225 Series													
WIT-225R	225 (102)	19.63 (498.5)	5.12 (130.2)	.49 (12.4)	.08 (2)	.39 (9.9)	.76 (19.3)	Standard in RMS-49	N/A	50	N/A	N/A	N/A
WIT-225L		33.50 (850.9)	9.84 (250)										

*Black Nylon 6/6 available by special order.

* Flared tip

-800-621-1892
Get quote
Angic Global Solutions 1-888-872-0690
https://www.AngicGlobal.com Sales@AngicGlobal.com

WIT in Colors

Colored Wrap-It Ties

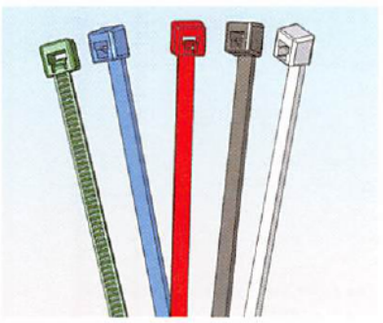

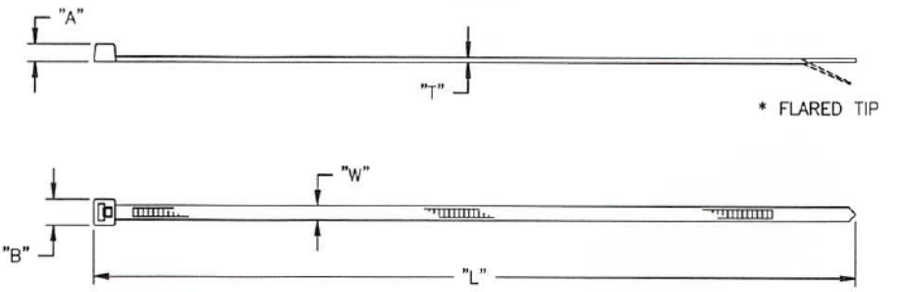

Features

- Can be used for color-coding applications or decorative purposes

Part Number Example			
Part No. Prefix	Color	Std. Pack Suffix	Complete Part No.
WIT-30R	-RD	-M	WIT-30R-M

Part No. Prefix	Min. Loop Tensile Strength lb (kg)	"L" Length Ref.	Max. Bundle Diameter	"W" Width Ref.	"T" Thickness Ref.	"A" Head Thickness	"B" Head Width	Green Nylon 6/6, RMS-01 -GN	Blue Nylon 6/6, RMS-01 -BL	Red Nylon 6/6, RMS-01 -RD	Standard Package Suffix -M
WIT-18 Series											
WIT-18R*	18 (8)	4.52 (114.8)	.75 (19.1)	.10 (2.5)	.04 (1)	.15 (3.8)	.19 (4.8)	Standard	Standard	Standard	1,000
WIT-30 Series											
WIT-30R	30 (13)	5.75 (146.1)	1.25 (31.8)	.14 (3.6)	.05 (1.3)	.17 (4.3)	.25 (6.4)	Standard	Standard	Standard	1,000
WIT-50 Series											
WIT-50R	50 (22)	8.00 (203.2)	2.00 (50.8)	.19 (4.8)	.05 (1.3)	.21 (5.3)	.31 (7.9)	Standard	Standard	Standard	1,000
Other colors available by special order.											

*Flared Tip

WIT-HT/WIT-HS

High Temperature & Heat Stabilized Wrap-It Ties

Features

- HS series is serviceable to 239°F (115°C)
- HT series is serviceable to 286°F (141°C)

Part Number Example			
Part No. Prefix	Temperature	Std. Pack Suffix	Complete Part No.
WIT-18R	-HS	-C	WIT-18R-HS-C
WIT-30R	-HT	-M	WIT-30R-HT-M

H

Part No. Prefix	Min. Loop Tensile Strength lb (kg)	"L" Length Ref.	Max. Bundle Diameter	"W" Width Ref.	"T" Thickness Ref.	"A" Head Thickness	"B" Head Width	High Temperature Nylon 4/6, RMS-109 Color: Natural -HT	Heat Stabilized Nylon 6/6, RMS-47 Color: Black -HS	Standard Package Suffix Standard Pack Quantities -C	-D	-M
WIT-18 Series												
WIT-18R*	18 (8)	4.52 (114.8)	.75 (19.1)	.10 (2.5)	.04 (1)	.15 (3.8)	.19 (4.8)	Standard	Standard	100	N/A	1,000
WIT-30 Series												
WIT-30R	30 (13)	5.75 (146.1)	1.25 (31.8)	.14 (3.6)	.05 (1.3)	.17 (4.3)	.25 (6.4)	Standard	Standard	100	N/A	1,000
WIT-50 Series												
WIT-50R	50 (22)	8.00 (203.2)	2.00 (50.8)	.19 (4.8)	.05 (1.3)	.21 (5.3)	.31 (7.9)	Standard	Standard	100	N/A	1,000
WIT-50L		15.40 (391.2)	4.50 (114.3)					N/A				
WIT-60 Series												
WIT-60R	60 (27)	10.75 (273.1)	2.75 (69.9)	.18 (4.6)	.05 (1.3)	.20 (5.1)	.32 (8.1)	Special Order	Standard	100	N/A	1,000
WIT-120 Series												
WIT-120R	120 (54)	15.06 (382.5)	4.25 (108)	.30 (7.6)	.07 (1.8)	.29 (7.4)	.51 (13)	N/A	Standard	100	500	N/A

*Flared Tip

39-4060 Samp
Get quote
Angic Global Solutions 1-888-872-0690
https://www.AngicGlobal.com Sales@AngicGlobal.com

QTE
Quick Tie

NEW

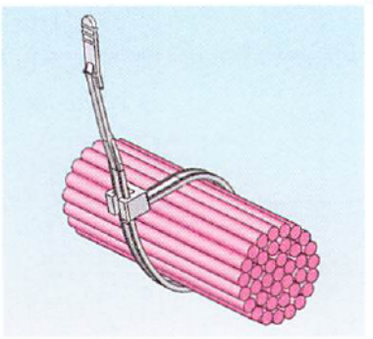

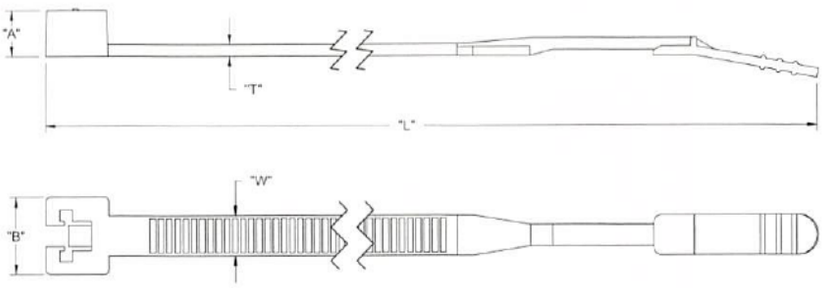

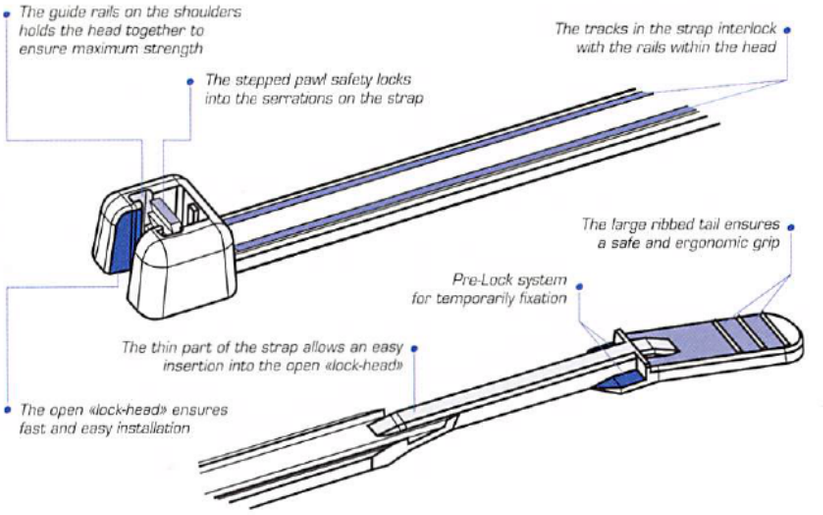

Installation Guide

1

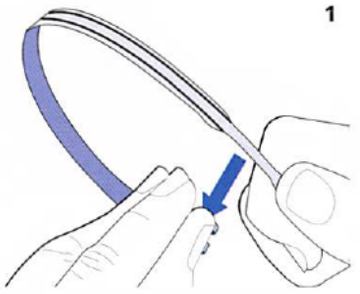

While holding the large ribbed tail of the strap, the thin part of the strap is inserted into the gap of the "lock-head".

2

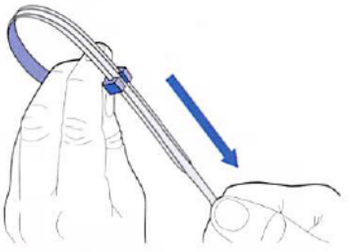

The strap is pulled through the «lock-head» and its serrations lock with the stepped pawl of the "lock-head".

Fig. 1



No Pre-Lock Feature

Fig. 2



At Pre-Lock Position

Mat'l: Nylon 6/6, RMS-220 Color: Natural	Mat'l: UVB Nylon 6/6, RMS-221 Color: Black	Min Loop Tensile Strength lb (kg)	Max. Bundle Dia.	"L" Length Ref.	"T" Thickness Ref.	"W" Width Ref.	"A" Head Thickness	"B" Head Width	Standard Pack	Fig.	Material Variation		
											UL94 V0 Nylon 6/6, RMS-19 Color: Natural	Heat Stabilized Nylon 6/6 RMS-47 Color: Black	High Temperature Nylon 4/6 RMS-109 Color: Natural
											-19	-47	-109
QTE-18R	QTE-18R-UVB	18 (8)	.945 (24)	4.134 (105)	.039 (1)	.102 (2.6)	.146 (3.7)	.197 (5)	200	1	Special	Special	Special
QTE-18L	QTE-18L-UVB		1.575 (40)	6.102 (155)									
QTE-18V	QTE-18V-UVB		1.969 (50)	7.677 (195)									
QTE-30R	QTE-30R-UVB	30 (13)	1.496 (38)	6.299 (160)	.051 (1.3)	.142 (3.6)	.181 (4.6)	.276 (7)	100	2			
QTE-30L	QTE-30L-UVB		1.969 (50)	7.874 (200)									
QTE-30XL	QTE-30XL-UVB		2.559 (65)	9.843 (250)									
QTE-30VL	QTE-30VL-UVB		3.228 (82)	11.811 (300)									
QTE-50R	QTE-50R-UVB	50 (22)	1.969 (50)	8.268 (210)	.055 (1.4)	.185 (4.7)	.213 (5.4)	.354 (9)					
QTE-50RL	QTE-50RL-UVB		2.953 (75)	11.417 (290)									
QTE-50L	QTE-50L-UVB		4.331 (110)	16.142 (410)									
QTE-120SL	QTE-120SL-UVB	120 (54)	2.756 (70)	11.811 (300)	.072 (1.8)	.303 (7.7)	.299 (7.6)	.520 (13.2)					
QTE-120R	QTE-120R-UVB		4.331 (110)	16.535 (420)									
QTE-120L	QTE-120L-UVB		5.709 (145)	20.472 (520)									

Other colors available by special order.

-800-621-1892
Get quote
Angic Global Solutions 1-888-872-0690
https://www.AngicGlobal.com Sales@AngicGlobal.com

WIT-LP
Low Profile Cable Ties

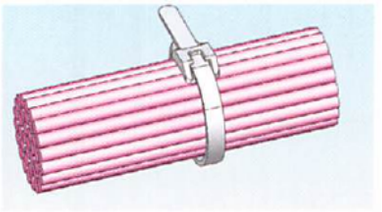

NEW

Features
- Low profile ideal for confined spaces
- Head height minimizes snags, abrasions, and cuts
- Flexible head easily bends around small bundles

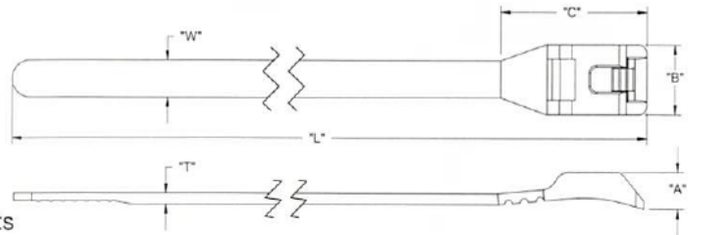

Material: Nylon 6/6, RMS-01 Color: Natural	Material: UVB Nylon 6/6, RMS-46 Color: Black	Min. Loop Tensile Strength lb (kg)	Bundle Diameter Range	"A" ±.020 (0.51)	"B" ±.020 (0.51)	"C" ±.030 (0.76)	"L" ±.030 (0.76)	"T" ±.005 (0.13)	"W" ±.005 (0.13)	Std. Pack
WITLP-50R-M	WITLP-50R-UVB-M	50 (22)	.375-1.750 (9.5-44.45)	.176 (4.47)	.337 (8.56)	.690 (17.53)	7.500 (190.5)	.053 (1.35)	.177 (4.5)	1,000
WITLP-120R-C	WITLP-120R-UVB-C	120 (54)	.563-3.500 (14.3-88.9)	.270 (6.86)	.487 (12.37)	1.380 (35.05)	16.000 (406.4)	.075 (1.91)	.300 (7.62)	100

WIT-KIT-1
Cable Tie Kit



Features
- Great for installers, construction, and DIY projects
- The sturdy tackle box features an easy open latch, divided sections and can be used over and over!
- The ties and accessories come in a durable Nylon 6/6, RMS-01 in natural color
- Each kit includes 50 of the following parts:
  - 18lb. 4.5" long tie
  - 30lb. 5.75" long tie
  - 50lb. 8" long tie
  - 1x1" tie holder
  - .75x.75" tie holder
- See pages 108 & 124 for detailed drawings

FTH-5A-RT

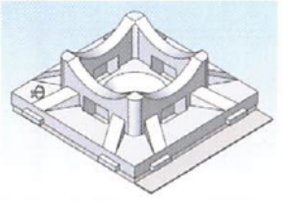

WIT-50R

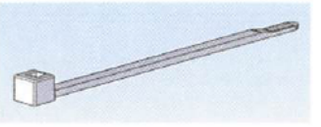

FTH-7A-RT

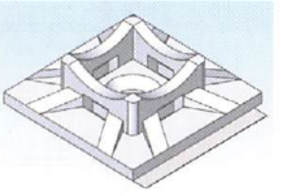

WIT-30R

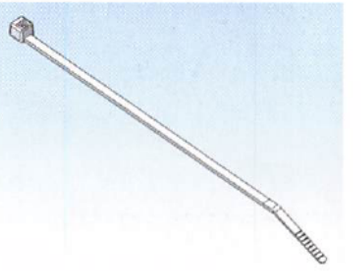

H

WIT-1/2A/3A
Cable Tie Installation Tools



WIT-1
- Lightweight, economical tool for job site installations and repairs
- For WIT-18 through -50 wire ties



WIT-2A
- Heavy duty construction for Richco Series WIT-18, -30, -40, -50 and -60 wire ties
- Cuts cable tie flush when adjustable preset bundling tension is reached



WIT-3
- For Richco WIT-120 and -175 wire ties



WIT-3A
- Economy model for Richco Series WIT-18, -30, -40, -50 and -60 wire ties
- Glass reinforced Nylon provides lightweight durability

39-4060 Samp
Get quote
Angic Global Solutions 1-888-872-0690
https://www.AngicGlobal.com Sales@AngicGlobal.com

WIT-RT
Release Tab Wrap-It Tie



• UL #E71558

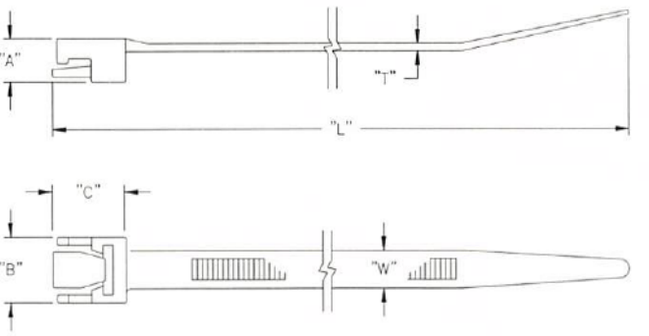

Part No. Prefix Standard Material: Nylon 6/6, RMS-01 Color: Natural	Min. Loop Tensile Strength lb (kg)	"L" Length Ref.	Max. Bundle Diameter	"W" Width Ref.	"T" Thickness Ref.	"A" Head Thickness	"B" Head Width	"C"	Standard Package Suffix Standard Package Quantities -Q	 -M	Material Variation UVB Nylon 6/6, RMS-46 Color: Black -UVB
WIT-RT-1550	40 (18)	5.50 (139.7)	1.25 (31.8)	.21 (5.3)	.05 (1.3)	.24 (6.1)	.36 (9.1)	.45 (11.4)	N/A	1,000	Standard
WIT-RT-0800		8.00 (203.2)	2.00 (50.8)								
WIT-RT-1050		10.50 (266.7)	2.50 (63.5)								
WIT-RT-1525	250 (113)	15.25 (387.4)	4.00 (101.6)	.52 (13.2)	.09 (2.3)	.38 (9.7)	.80 (20.3)	.86 (21.8)	25	N/A	Special
WIT-RT-2150		21.50 (546.1)	6.00 (152.4)								
WIT-RT-2775		27.75 (704.9)	8.00 (203.2)								
Other colors and materials available by special order.											

WIT-R
Releasable Wrap-It Tie

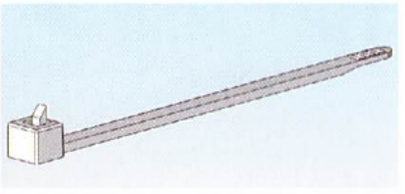

• UL #E71558

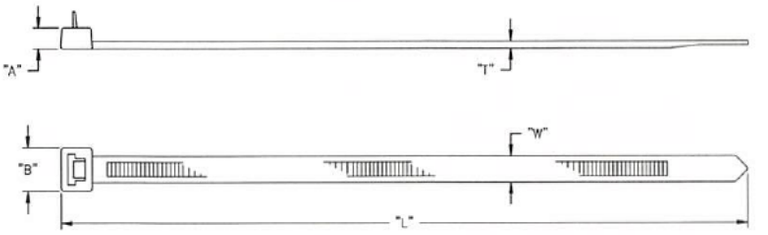

H

Features

- The extended tab on the tie head permits easy release
- Release tab facilitates routing changes and repairs

Part No. Prefix Standard Material: Nylon 6/6, RMS-01 Color: Natural	Min. Loop Tensile Strength lb (kg)	"L" Length Ref.	Max. Bundle Diameter	"W" Width Ref.	"T" Thickness Ref.	"A" Head Thickness	"B" Head Width	Standard Package Suffix Standard Package Quantities -C	 -D	 -M	Material Variation UVB Nylon 6/6, RMS-46 Color: Black -UVB
WIT-50SR	50 (22)	6.00 (152.4)	1.50 (38.1)	.19 (4.8)	.05 (1.3)	.21 (5.3)	.31 (7.9)	100	N/A	1,000	Standard
WIT-50RR		8.00 (203.2)	2.00 (50.8)								
WIT-120SR	120 (54)	8.50 (215.9)	2.00 (50.8)	.30 (7.6)	.07 (1.8)	.29 (7.4)	.51 (12)	N/A	500	N/A	
WIT-120RR		15.00 (381)	4.25 (108)								
WIT-120LR		21.25 (539.8)	5.87 (149.1)								
Other colors and materials available by special order.											

1-800-621-1892
Get quote
Angic Global Solutions 1-888-872-0690
https://www.AngicGlobal.com Sales@AngicGlobal.com

HT
Hanking Tie

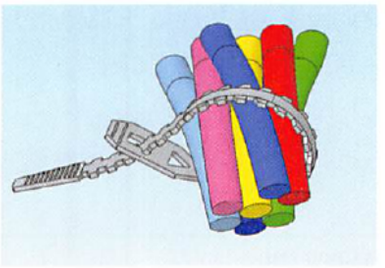

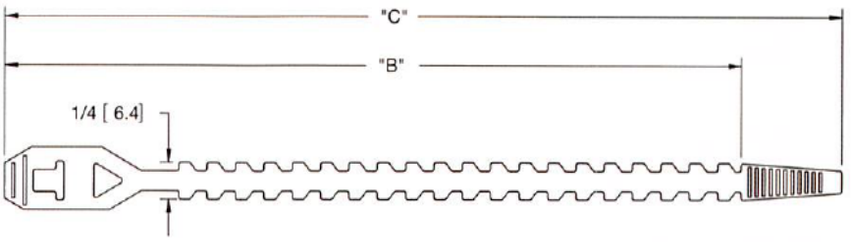

Features

- Ideal for wrapping electrical cords for shipping and packaging
- Releasable, adjustable and reusable

Material: Polyethylene, RMS-134 Color: Natural Standard Pack: 1,000 per bag	Max. Bundle Diameter	"B" Ref.	"C" Ref.
HT-3.9	.91 (23)	3.19 (81)	3.90 (99)
HT-4.9	1.10 (28)	4.21 (107)	4.92 (125)
HT-5.9	1.92 (36)	5.20 (132)	5.91 (150)

BT
Beaded Tie

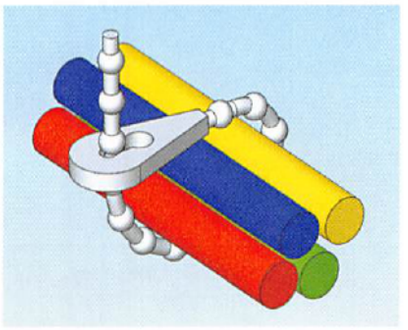

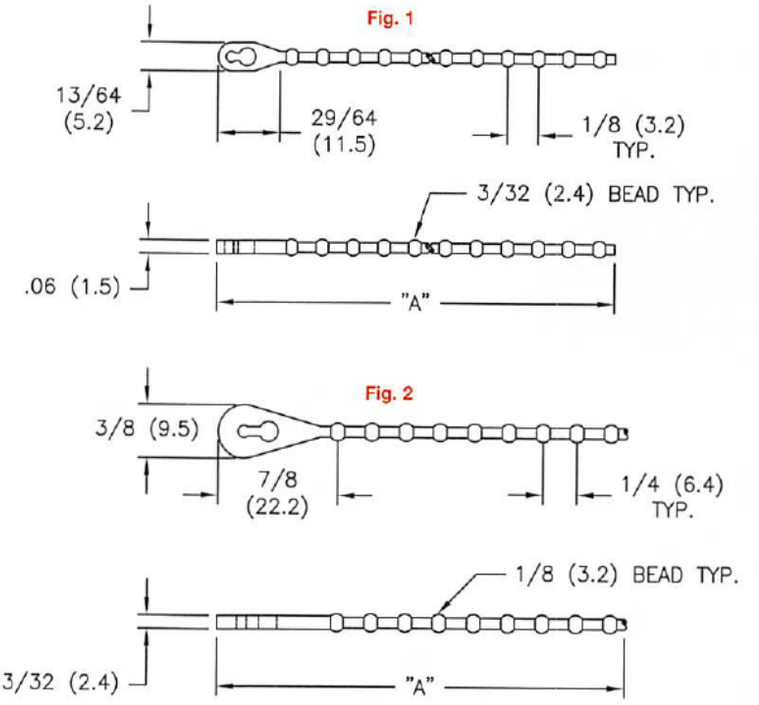

Features

- The locking key head design secures quickly to bundle wires and releases easily to add wires or re-route
- The smooth, round beads will not abrade insulation
- Commonly used for tagging operations such as color coding or attaching ID plates

Part No. Prefix Standard Pack: 1,000 per bag	"A" Length Ref.	Max. Bundle Diameter*	Fig.	Color & Material Suffix Color: Red Mat'l: Polypropylene, RMS-10 -10-RD	Color: Yellow Mat'l: Polypropylene, RMS-10 -10-YL	Color: Blue Mat'l: Polypropylene, RMS-10 -10-BL	Color: Black Mat'l: Polypropylene, RMS-10 -10-BK	Color: Black Mat'l: Nylon 6/6, RMS-01 -01-BK	Color: Natural Mat'l: Nylon 6/6, RMS-01 -01-NT
BT-2	2.50 (63.5)	9/16 (14.3)	1	Standard	Standard	Standard	Special	Special	Special
BT-4	4.00 (101.6)	1 (25.4)					Standard	Standard	Standard
BT-5	5.00 (127)	1-1/4 (31.8)					Special	Special	Special
BT-6	6.00 (152.4)	1-3/4 (44.5)							
BT-8	8.75 (222.3)	2-3/8 (60.3)	2						
BT-10	10.75 (273.1)	3-1/8 (85.7)							
BT-12	12.75 (323.9)	3-5/8 (92.1)							

*All Maximum Bundle Diameters Require 3 Beads Engagement

H

39-4060 Samp
Get quote
Angic Global Solutions 1-888-872-0690
https://www.AngicGlobal.com Sales@AngicGlobal.com

HTE
Beaded Hanking Tie

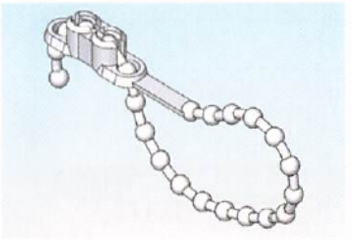

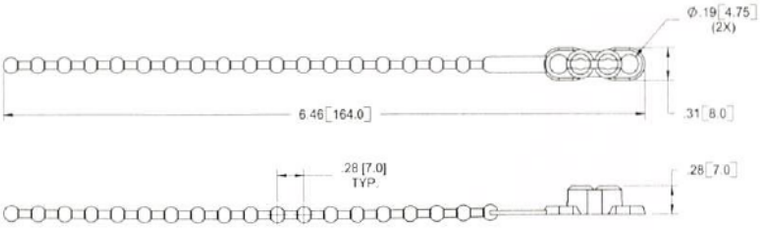

HTE-164-PE3L/1H	
Mat'l: Polyethylene, RMS-155 Color Natural	Standard Pack: 1,000 per bag

Features
- Installed by threading the beaded length through the first hole, two beads are securely locked into place by hand and the remainder of the tie is passed through the last hole for extra cable security
- Installation process can be reversed making the tie totally reusable
- Manufactured in a specially formulated Polyethylene that enables the tie to have a degree of elasticity, which prevents cable bundles being scratched

PT/ST
Pushbutton Wire Tie

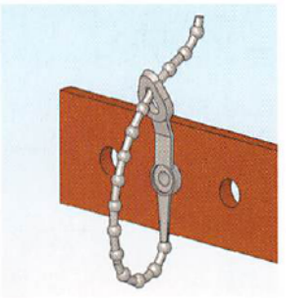

PT

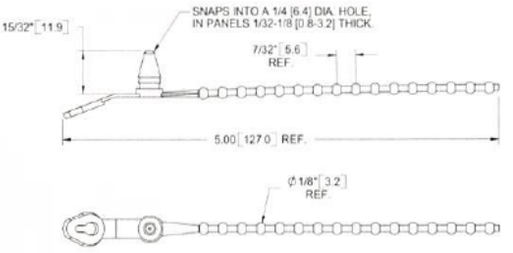

ST

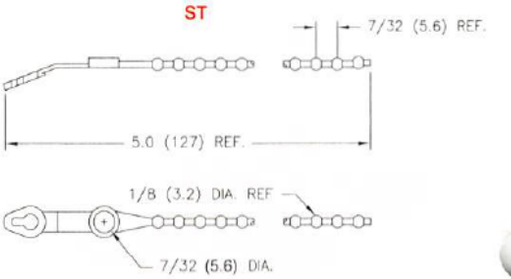

PT/ST			Standard Pack: 1,000 per bag	
Mat'l: Polypropylene, RMS-10	Mat'l: Nylon 6/6, RMS-01	Mat'l: UL94 V0 Nylon 6/6, RMS-19	Color	Bundle Dia. Range
PT-200	PT-300	Not Available	Red	1/4 - 1 1/4 (6.4 - 31.8)
PT-203	PT-303	Not Available	Black	
PT-205	PT-305	PT-405	Natural	
ST-205	ST-305	ST-405		
Other colors and materials available by special order.				

Features
- PT style mounts easily into a pre-drilled hole
- ST style is available with 7/32 (5.6) diameter hole in place of cone for screw mounting

LBT
Locking Beaded Tie

- UL #E93670

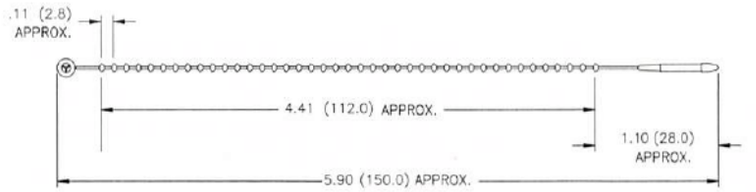



Features
- Permanent lock
- Commonly used in the retail market for tagging and securing merchandise

Material: Nylon 6/6, RMS-01 • Color: Natural		
Part No.	Standard Pack: 1,000 per Bag	
	Min. Loop Tensile lb (kg.)	Max. Bundle Dia.
LBT-18-01	18 (8)	1.4 (35.6)

-800-621-1892
Get quote
Angic Global Solutions 1-888-872-0690
https://www.AngicGlobal.com Sales@AngicGlobal.com

WIT-50RLA
Push-Mount Ties

NEW

• UL #E71558

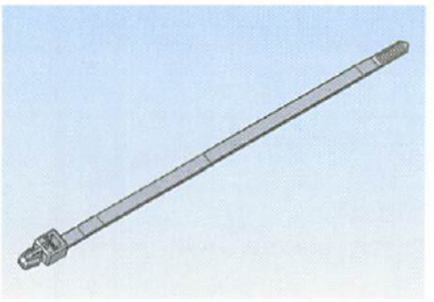

Fig. 1

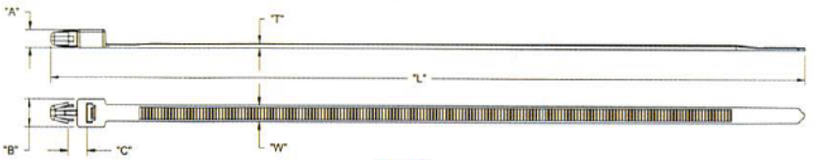

Fig. 2

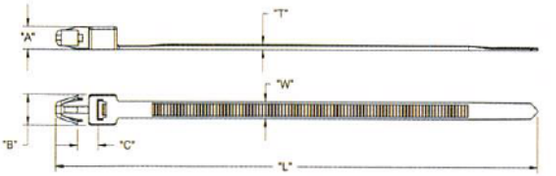

Features

- Push into a pre-drilled hole for a simple and secure one piece harness
- Bundling can be done either before or after mounting
- Spacer option is ideal for routing cables above crowded panels

Standard Mat'l: Nylon 6/6, RMS-01 Color: Natural Standard Pack: 1,000 per bag	Min. Loop Tensile Strength lb (kg)	"L" Length Ref.	Max. Bundle Diameter	"W" Width Ref.	"T" Thickness Ref.	"A"	"B" Ref.	"C" Ref.	Hole Dia.	Panel Thickness	Mat'l Variation: UVB Nylon 6/6, RMS-46 Color: Black -UVB	Fig.
WIT-50RLA	50 (22)	8.87 (225.4)	2.00 (50.8)	.19 (4.8)	.05 (1.3)	.20 (5.1)	.32 (8.1)	.19 (4.8)	.187 ± .003 (4.8 ± 0.08)	.093 (2.36)	Special	1
WIT-50RLA-1		5.32 (135)	1.00 (25.4)			.26 (6.5)		.24 (6)	.250 ± .003 (6.35 ± 0.08)	.125 (3.18)		2
WIT-50RLA-2		6.69 (170)	1.50 (38.1)									
WIT-50RLA-3		7.87 (200)	1.75 (44.5)									

WIT-RA/SA
Arrowhead Ties

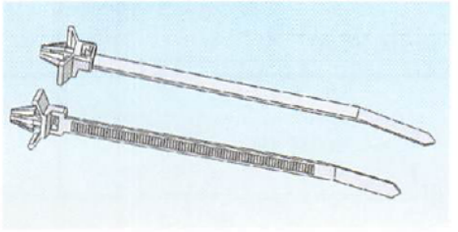

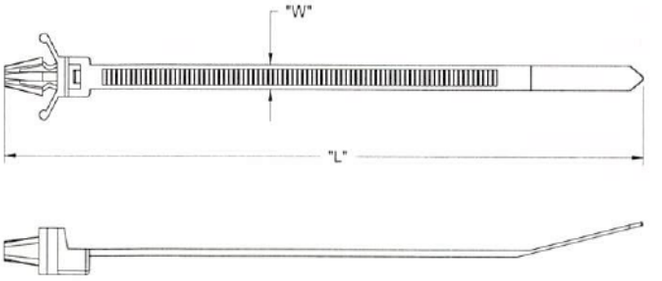

Features

- Tension wings provide a tight fit to board

Standard Mat'l: Nylon 6/6, RMS-01 Color: Natural Standard Pack: 1,000 per bag	Min. Loop Tensile Strength lb (kg)	"L" Length Ref.	Max. Bundle Diameter	"W" Width Ref.	Hole Dia.	Panel Thickness	Mat'l Variation: UVB Nylon 6/6, RMS-46 Color: Black Replace -01 with -UVB
WIT-18RA-01	18 (8)	4.3 (109)	.80 (21)	.10 (25)	.187 (4.8)	.062 (1.6)	Special
WIT-50SA-01	50 (22)	5.0 (127)	.90 (23)	.19 (4.8)	.252 (6.4)		
WIT-50SRA-01		6.6 (168)	1.40 (36)				
WIT-50RA-01		7.8 (198)	1.70 (43)				

539-4060 Sam
Get quote
Angic Global Solutions 1-888-872-0690
https://www.AngicGlobal.com Sales@AngicGlobal.com

WIT-18RA
Self-Mount Ties



- UL #E71558

Features

- Spacer option is ideal for routing cables above crowded panels
- Tension wings provide a tight fit to board

WIT-18RA

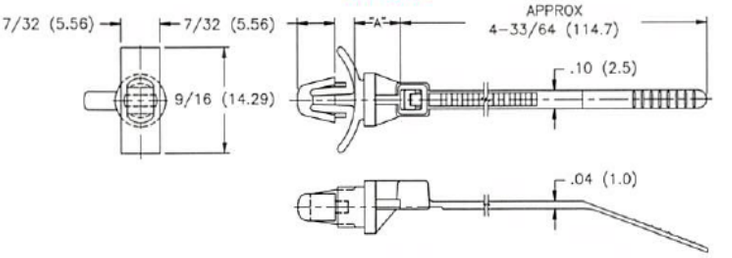

WIT-18R1A

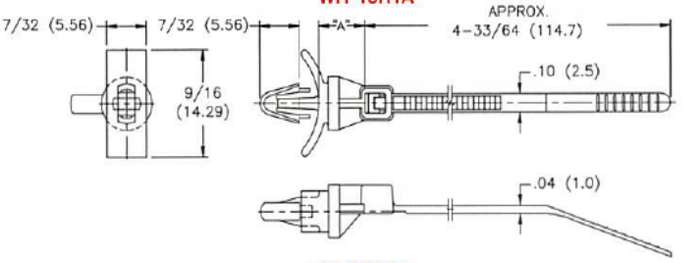

WIT-18R2A

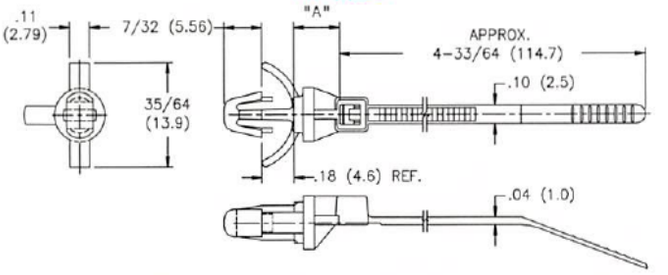

Standard Material: Nylon 6/6, RMS-01 Color: Natural Std. Pack 1,000 per bag	Min. Loop Tensile Strength lb (kg)	Max. Bundle Diameter	"A"	Hole Dia.	Panel Thickness Range	Material Variation UVB Nylon 6/6, RMS-46 Color: Black Replace -01 with -UVB
WIT-18RA-4-01	18 (8)	.750 (19.1)	.250 (6.4)	.187 ± .003 (4.75 ± 0.08)	.031-.078 (0.79-1.98)	Special
WIT-18RA-6-01			.375 (9.5)			
WIT-18RA-8-01			.500 (12.7)			
WIT-18R1A-4-01			.250 (6.4)	.156 ± .003 (4 ± 0.08)		
WIT-18R1A-6-01			.375 (9.5)			
WIT-18R1A-8-01			.500 (12.7)			
WIT-18R2A-4-01			.250 (6.4)	.187 ± .003 (4.75 ± 0.08)	.062-.141 (1.6-3.6)	

H

WIT-30RRA
Push-Mount Ties



- UL #E71558

Features

- Push into a pre-drilled hole for a simple and secure one piece harness
- Bundling can be done either before or after mounting
- Spacer option is ideal for routing cables above crowded panels

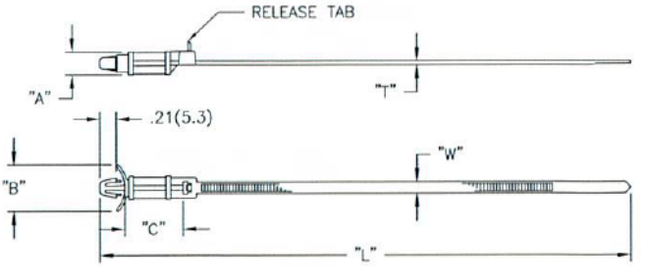

Standard Mat'l: Nylon 6/6, RMS-01 Color: Natural Standard Pack: 1,000 per bag	Min. Loop Tensile Strength lb (kg)	"L" Length Ref.	Max. Bundle Diameter	"W" Width Ref.	"T" Thickness Ref.	"A"	"B" Ref.	"C" Ref.	Hole Dia.	Panel Thickness	Mat'l Variation UVB Nylon 6/6, RMS-46 Color: Black -UVB
WIT-30RRA-4	30 (13)	6.312 (160.3)	1.250 (31.8)	.14 (3.6)	.05 (1.3)	.28 (7.1)	.562 (14.3)	.281 (7.1)	.187 ± .003 (4.8 ± 0.08)	.030-.078 (0.8-1.98)	Special
WIT-30RRA-6		6.562 (166.7)						.531 (13.5)			
WIT-30RRA-12		6.812 (173)						.781 (19.8)			
WIT-30RRA-16		7.062 (179.4)						1.00 (25.4)			

800-621-1892
Get quote
Angic Global Solutions 1-888-872-0690
https://www.AngicGlobal.com Sales@AngicGlobal.com

WIT-XAR
Releasable Arrowhead Ties

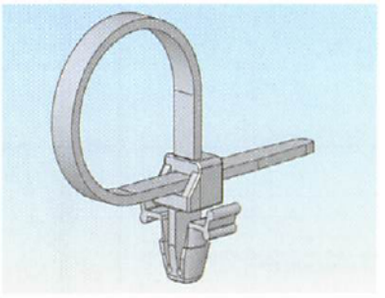

Features

- Tie is permanent locking but arrowhead is easily removed from the panel

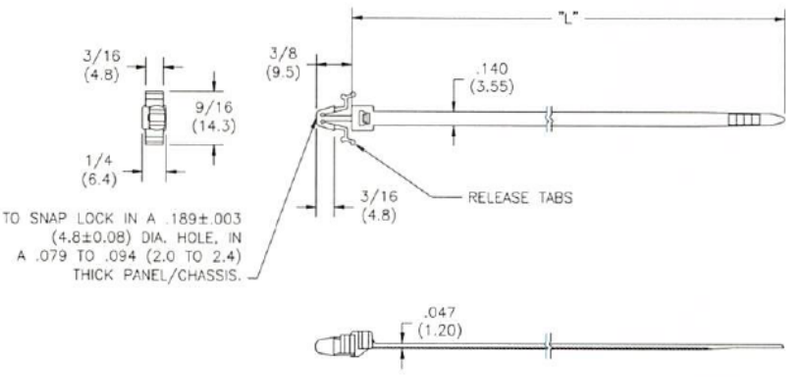

Standard Material: Nylon 6/6, RMS-01 Color: Natural	Min. Loop Tensile Strength lb (kg)	"L" Length Ref.	Max. Bundle Diameter
Standard Pack 1,000 per bag			
WIT-30RAR1-2	30 (13)	4.75 (120.7)	1.00 (25.4)
WIT-30LAR1-2		5.75 (146)	1.25 (31.7)

TOAH-18-01
Tie On Arrowhead

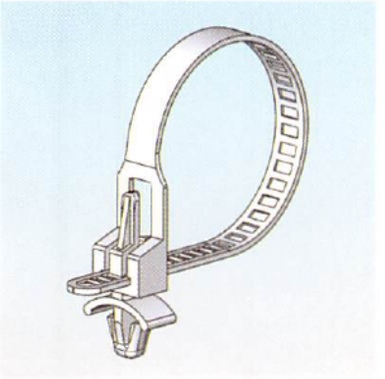

Features

- Allows for easy removal or additions to bundles
- To release tie, simply press the release tab with finger

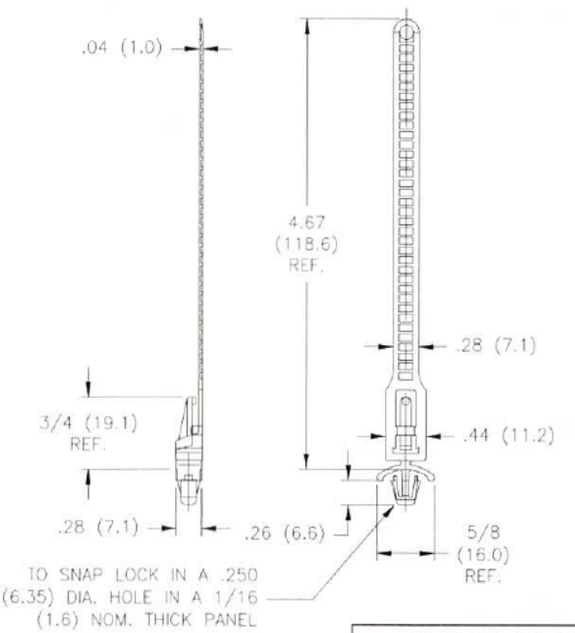

Material: Nylon 6/6, RMS-01 • Color: Natural
Standard Pack: 1,000 per bag
Maximum Bundle Diameter 1-1/8 (28.5)
Black color available by special order

H

539-4060 Sam 7
ANGIC
Get quote
Angic Global Solutions 1-888-872-0690
https://www.AngicGlobal.com Sales@AngicGlobal.com

SRRCT
River Mount Cable Tie

NEW

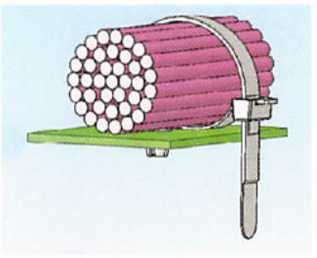

Features
- One part design, saving on installation time and inventory
- Tie is releaseable

Fig. 1

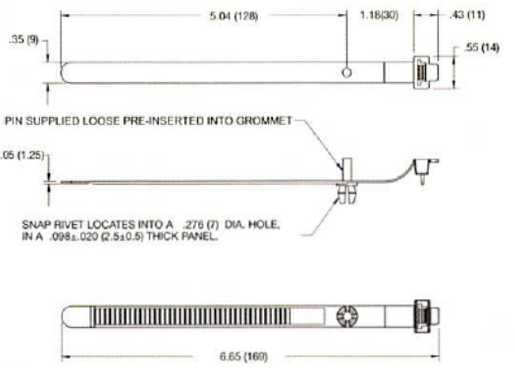

Fig. 2

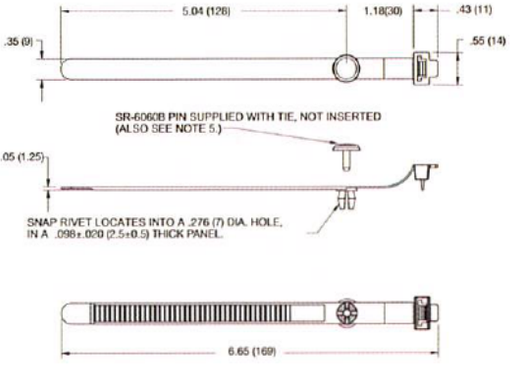

Material: Nylon 6/6, RMS-01 Color: Black						
Part No.	Max. Loop Tensile Strength lb(N)	Max. Bundle Dia.	Rivet Pin	Rivet Pin Material	Standard Pack	Fig.
SRRCT-1	56 (250)	.40 (1.58)	Pin pre-inserted into grommet	Nylon 6/6, RMS-01	200	1
SRRCT-2			SR-6060 Pin supplied in bag	Nylon 6, RMS-52	100	2
See page 52 for SR-6060 Pin information						

TOBS
Tie On Base, Screw

H

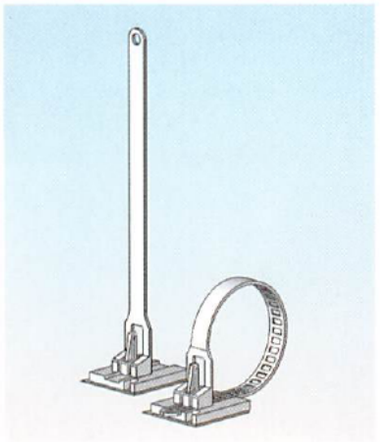

Features
- Releasable, adjustable and reusable
- Can be mounted with two #4 or M2.5 screws or with optional double-backed adhesive tape
- Base has a slot to guide strap under the locking mechanism

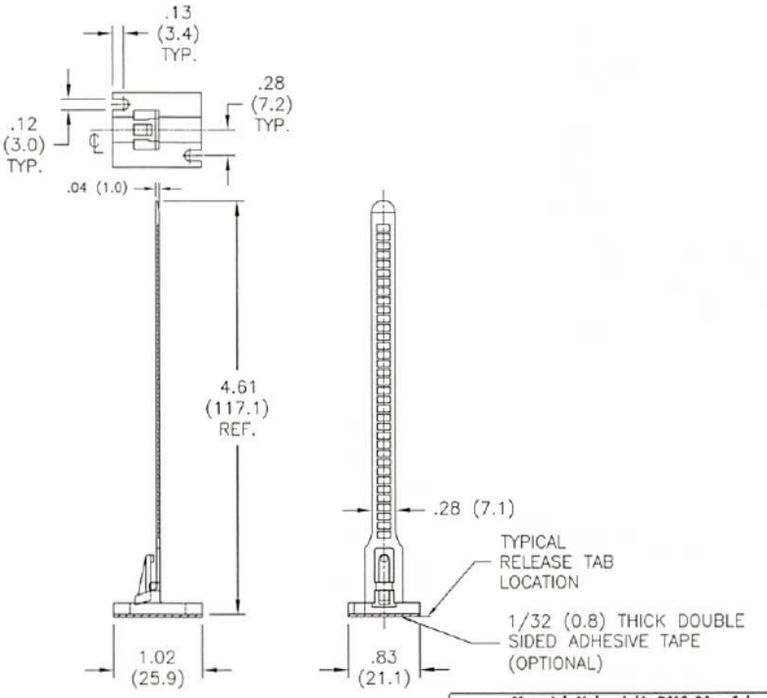

Material: Nylon 6/6, RMS-01 • Color: Black	
Standard Pack: 1,000 per bag	
Maximum Bundle Diameter = 1-1/8 (28.5)	
TOBS-18-01	Screw Mount
TOBS-18-01A-RT	Adhesive Mount
Acrylic Adhesive Tape, RMS-15	

800-621-1892
Get quote
Angic Global Solutions 1-888-872-0690
https://www.AngicGlobal.com Sales@AngicGlobal.com

WITS

Wrap-It Tie, Screw Mount

• UL #E71558

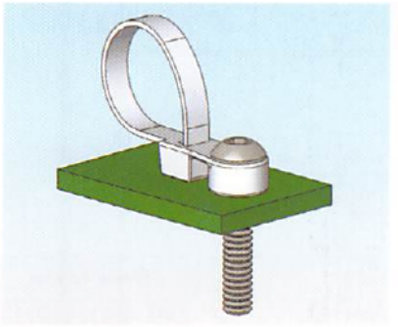

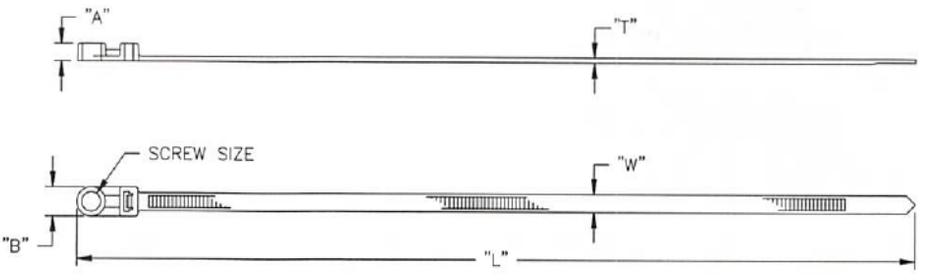

Features

- Hole in end of tie for mounting with a screw
- Can be used in place of a mounting base with separate ties

Part No. Prefix	Min. Loop Tensile Strength lb (kg)	"L" Length Ref.	Max. Bundle Diameter	"W" Width Ref.	"T" Thickness Ref.	"A" Head Thickness	"B" Head Width	Screw Size Accepted	Standard Package Suffix		Material Variation
Standard Material: Nylon 6/6, RMS-01 Color: Natural									Standard Package Quantities		UVB Nylon 6/6, RMS-46 Color: Black
									-D	-M	-UVB
WITS-4-18MR	18 (8)	5 (127)	3/4 (19.1)	.10 (2.5)	.04 (1)	.12 (3)	.23 (5.8)	#4 or M2.5	N/A	1,000	Special
WITS-8-50MS	50 (22)	6-3/4 (171.5)	1-1/2 (38.1)	.19 (4.8)	.05 (1.3)	.20 (5.1)	.37 (9.4)	#8 or M4			
WITS-8-50-MRL		8-11/16 (220.7)	2 (50.8)								
WITS-8-50MR		11-5/8 (295.3)	3 (76.2)								
WITS-8-50ML		16 (406.4)	4 (101.6)								
WITS-10-50MS		6-3/4 (171.5)	1-1/2 (38.1)					#10 or M5			
WITS-10-50MRL		8-11/16 (220.7)	2 (50.8)								
WITS-10-50MR		11-5/8 (295.3)	3 (76.2)								
WITS-10-50ML		16 (406.4)	4 (101.6)								
WITS-14-120MR	120 (54)	15-5/8 (396.9)	4 (101.6)	.30 (7.6)	.07 (1.8)	.29 (7.4)	.50 (12.7)	1/4 or M6	500	N/A	
WITS-14-120ML		21-7/8 (555.6)	6 (152.4)								

WITCH-50R

Contour Head Wrap-It Tie

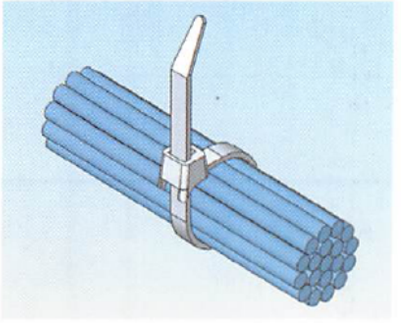

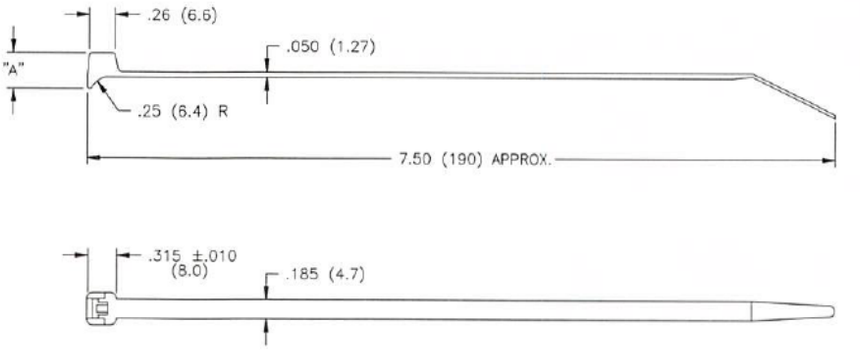

Features

- Contour head allows 360° contact around bundle, tube, hose, etc. that are 1/2 (12.7) diameter
- Clamps round surfaces tightly

Part No. Prefix	Min. Loop Tensile Strength lb (kg)	Max. Bundle Diameter	Min. Bundle Diameter	"A"	"T" Thickness Ref.	Standard Package Suffix		Material Variation
Standard Material: Nylon 6/6, RMS-01 Color: Natural						Standard Package Quantities		UVB Nylon 6/6, RMS-46 Color: Black
						-C	-M	-UVB
WITCH-50R	50 (22)	1.875 (47.6)	.25 (6.4)	.340 (8.6)	.05 (1.3)	100	1,000	Standard

539-4060 Sam
Get quote
Angic Global Solutions 1-888-872-0690
https://www.AngicGlobal.com Sales@AngicGlobal.com

WIT-DH
Double-Loop Tie

• UL #E71558

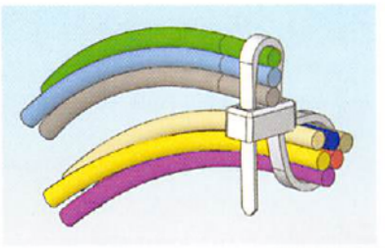

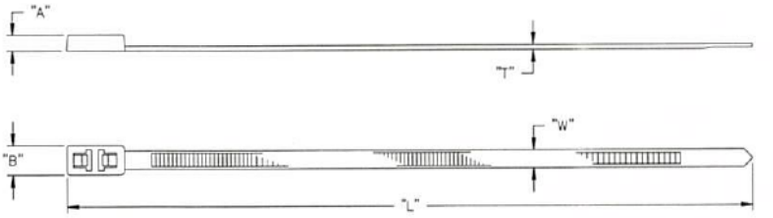

Features
- Designed to harness two bundles simultaneously
- The second loop can serve as a positioning device for a single bundle

Standard Material: Nylon 6/6, RMS-01 Color: Natural	Min. Loop Tensile Strength lb (kg)	"L" Length Ref.	Max. Combined Bundle Diameter	"W" Width Ref.	"T" Thickness Ref.	"A"	"B"	Material Variation
Std. Pack: 1,000 per bag								UVB Nylon 6/6, RMS-46 Color: Black -UVB
WIT-50RLDH	50 (22)	8.88 (225.4)	1.0 (25.4)	.19 (4.8)	.05 (1.3)	.21 (5.3)	.31 (7.9)	Standard
WIT-50LDH		15.63 (396.9)	2-1/4 (57.2)					
WIT-50LDHR*								Special
*Second Loop is Releasable								
Other colors available by special order.								

UMS
Universal Mounting Strap

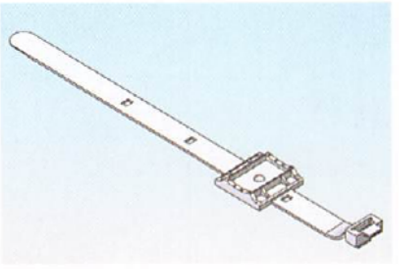

Richco Rivet No.	Panel Thickness Range
SR-5045	Up to .018 (0.5)
SR-5055	.018-.058 (0.5-1.5)
SR-5065	.058-.097 (1.5-2.5)
SR-5075	.097-.137 (2.5-3.5)
SR-5085	.137-.176 (3.5-4.5)
SR-5095	.176-.215 (4.5-5.5)
SR-5105	.215-.255 (5.5-6.5)
See Page 52	

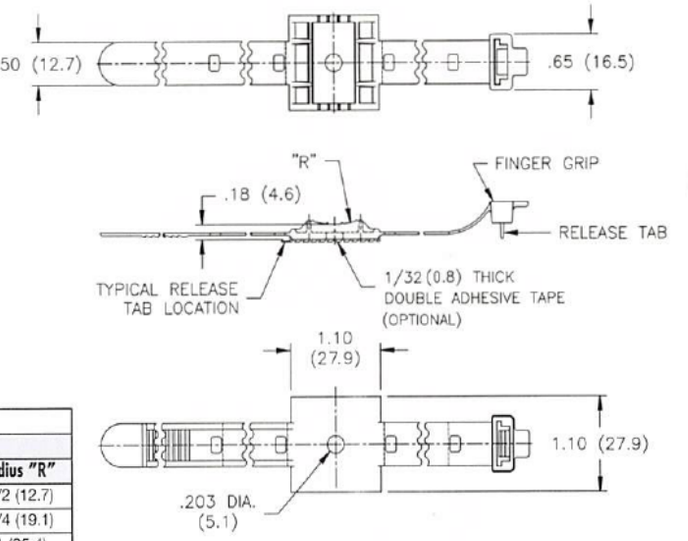

Features
- Can be mounted with a #6 or M4 screw, rivet (see chart) or optional double-backed adhesive tape

Material: Nylon 6/6, RMS-45 • Color: Black				
Part No. W/O Tape	Part No. W/ Tape	Standard Pack: 100		
		Maximum Bundle Dia.	Min. Loop Tensile Strength lb(kg)	Radius "R"
UMS-16-45	UMS-16-45A-RT	1 (25.4)	50 (22.68)	1/2 (12.7)
UMS-24-45	UMS-24-45A-RT	1 - 1/2 (38.1)		3/4 (19.1)
UMS-32-45	UMS-32-45A-RT	2 (50.8)		1 (25.4)
Acrylic Adhesive Tape, RMS-15				

RNS/LB
Nylon Strap and Locking Button

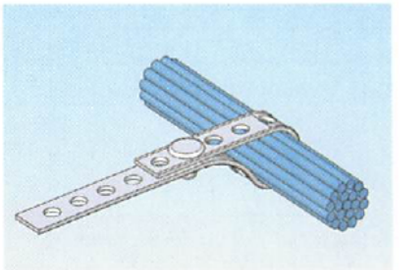

RNS-167

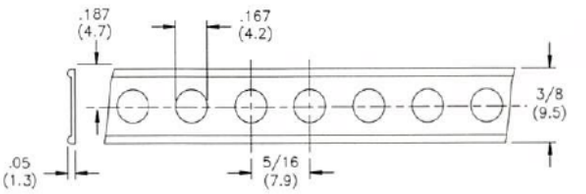

LB-5

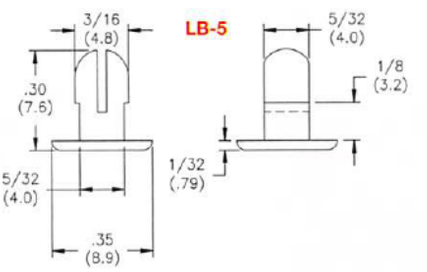

Strap Material: Nylon 6/6, RMS-17, • Color: Black Button Material: Nylon 6/6, RMS-01 • Color: Black	
Part No.	
Standard Pack: 100 feet roll	Standard Pack: 100 per bag
RNS-167	LB-5

Features
- Suspend, fasten or support cables, wire bundles, tubing, pipe or wire harnesses

-800-621-1892
Get quote
Angic Global Solutions 1-888-872-0690
https://www.AngicGlobal.com Sales@AngicGlobal.com

WIT-F1/F2
Marker Flag Wrap-It Tie

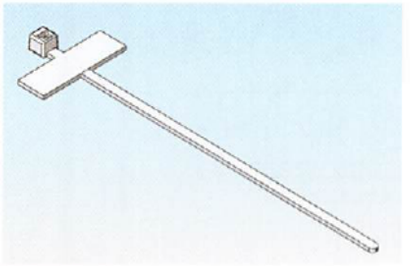

WIT-F1-18R

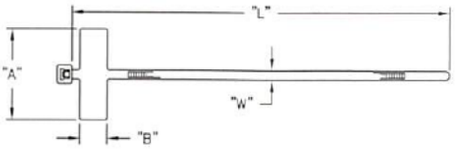

WIT-F2-18R

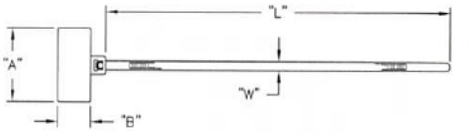

Features
- Marker tag can be used to imprint or write on to identify various bundles

Standard Material: Nylon 6/6, RMS-01 Color: Natural Std. Pack 1,000 per bag	Min. Loop Tensile Strength lb (kg)	"L" Length Ref.	Max. Bundle Diameter	"W" Width Ref.	"T" Thickness Ref.	"A"	"B"
WIT-F1-18R-M	18 (8)	4.50 (114.3)	.75 (19.1)	.10 (2.5)	.04 (1)	1.00 (25.4)	.313 (7.9)
WIT-F2-18R-M						.81 (20.6)	.375 (9.5)
Other colors available by special order.							

WIT-MK-1
Marker Tag Wrap-It Tie

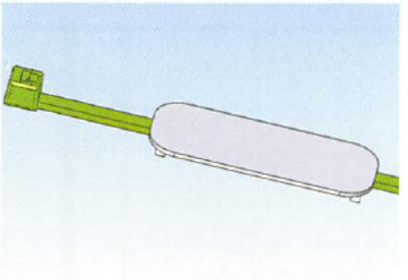

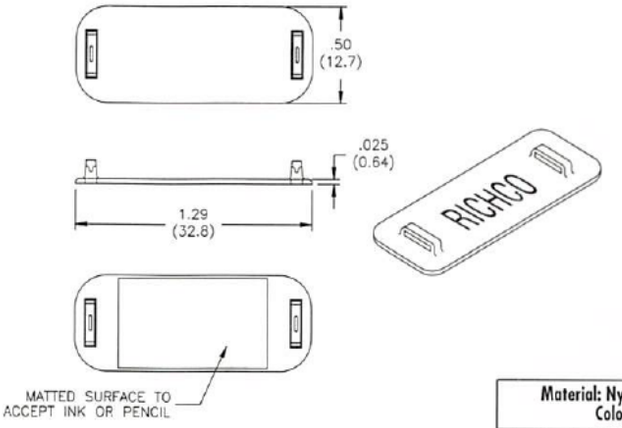

Features
- Mounted to a 30 (14), 40 (18), 50 (23), or 60 (27) lb (kg) standard cable tie to identify bundles

Material: Nylon 6/6, RMS-01 Color: Natural
Standard Pack: 1,000 per Bag

H

RKWS
Kwik Wrap Screw Mount Hook & Loop

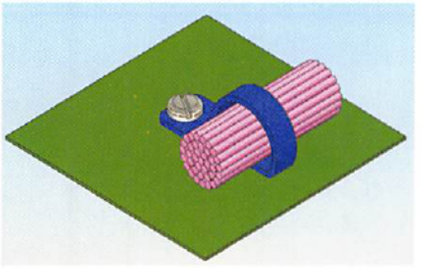

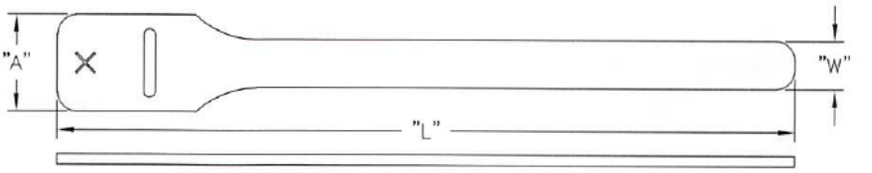

Features
- Cross in end of tie for mounting with a screw, eliminating the need for a mounting device

Material: Low Density Polyethylene Hook, RMS-249 • Nylon Knit Loop, RMS-251 Color: Black			
Part No.	Standard Pack: 100 pieces		
	"A" ± .125 (3.2)	"W" ± .125 (3.2)	"L" ± 1/2 (12.7)
RKWS-8-9-BK	1.0 (25.4)	1/2 (12.7)	9.0 (228.6)
RKWS-8-12-BK			12.0 (304.8)
Colors: White (-W), Blue (-BL), Red (-RD), Yellow (-YL), Green (-GN), Orange (-OR) available by special order. Specify when ordering.			

39-4060 Samp
Get quote
Angic Global Solutions 1-888-872-0690
https://www.AngicGlobal.com Sales@AngicGlobal.com

RKW
Kwik Wrap
Hook & Loop

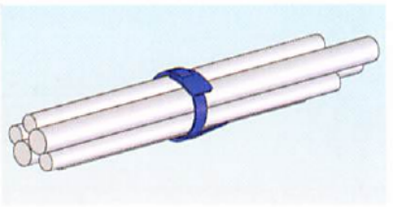

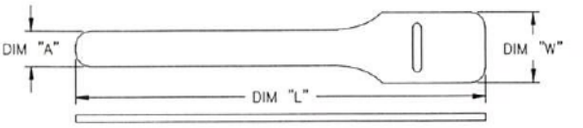

Features
- One piece design is reusable, adjustable, releasable and easy to install
- Will not cause damage to fiber because the ties cannot be overcinched
- Low profile, "soft" design is ideal in tight areas and will not get caught on other cables
- To mount, use part number FTH-27 found on page 123

Material: Low Density Polyethylene Hook, RMS-249 • Nylon Knit Loop, RMS-251 Color: Black			
Part No.	Standard Pack: 100 per bag		
	"A" ± 1/8 (3.2)	"W" ± .125 (3.2)	"L" ± 1/2 (12.7)
RKW-6-6-BK	3/8 (9.5)	.75 (19.1)	6 (152.4)
RKW-8-6-BK	1/2 (12.7)	1.0 (25.4)	
RKW-8-8-BK			8 (203.2)
RKW-8-11-BK			11 (279.4)
RKW-12-15-BK	3/4 (19.1)	1.5 (38.1)	15 (381)
RKW-12-18-BK			18 (457.2)
RKW-12-24-BK			24 (609.6)
Colors: White (-W), Blue (-BL), Red (-RD), Yellow (-YL), Green (-GN), Orange (-OR) available by special order. Specify when ordering.			

RKWD
Kwik Wrap D Style
Hook & Loop

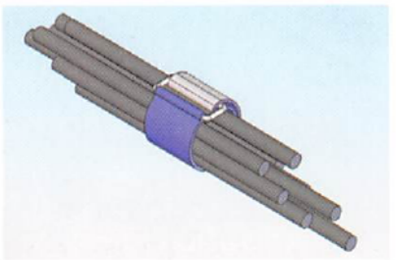

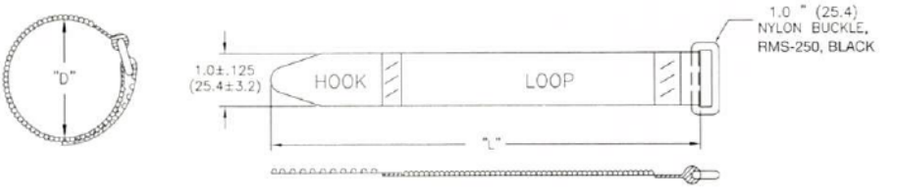

Features
- Wrap the strap around a bundle or object, loop it through the D-Ring, and then back onto itself for a secure hold
- Perfect for larger diameter bundles
- The Square Ring allows the user to "cinch" the strap tight around the bundle

Material: Low Density Polyethylene Hook, RMS-249 • Nylon Knit Loop, RMS-251 Color: Black		
Part No.	Standard Pack: 100 per bag	
	"L" ± 1/4 (.6.4)	"D" Approx. Bundle Dia. with Hook Fully Engaged
RKWD-16-9-BK	9 (228.6)	2-1/2 (63.5)
RKWD-16-12-BK	12 (304.8)	3 (76.2)
RKWD-16-15-BK	15 (381)	4 (101.6)
RKWD-16-20-BK	20 (508)	5-3/8 (136.5)
RKWD-16-24-BK	24 (609)	6-7/8 (174.6)
Available by special order only. 1,000 piece minimum.		
Colors: White (-W), Blue (-BL), Red (-RD), Yellow (-YL), Green (-GN), Orange (-OR) available by special order. Specify when ordering.		

RKWR
Kwik Wrap on a Roll
Hook & Loop

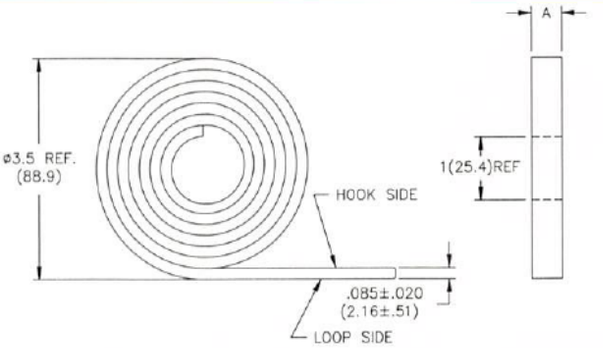

Features
- Ideal for job site applications. The desired length can be cut as needed

Material: Low Density Polyethylene Hook, RMS-249 • Nylon Knit Loop, RMS-251 Color: Black (-BK), Blue (-BL), Red (-RD), Yellow (-YL), Green (-GN), Orange (-OR). Specify with suffix when ordering.		
Part No.	Standard Pack: 1 roll per Bag	
	"A"	Total Length
RKWR-1	3/4 (19.1)	5 Yards (4.57m)
RKWR-2	1 (25.4)	

-800-621-1892
Get quote
Angic Global Solutions 1-888-872-0690
https://www.AngicGlobal.com Sales@AngicGlobal.com

RKWB-1
Kwik Wrap on Base Hook & Loop

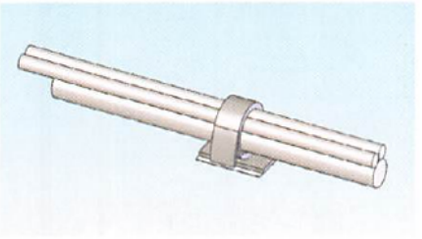

Features
- Easily mounted to wall surfaces or wire rack hardware
- Allows for easy re-assembly and adjustment without having to replace the wrap

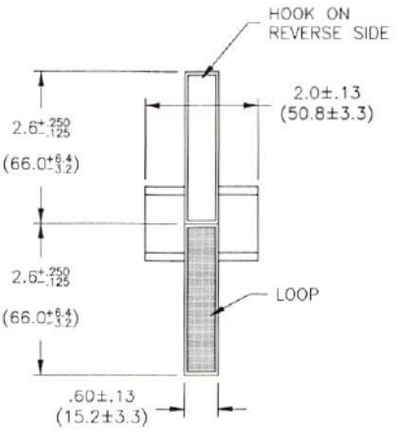

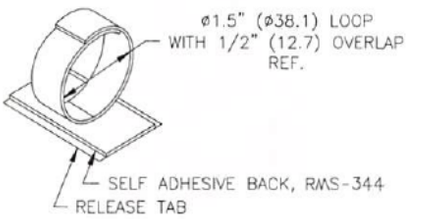

Material: Hook and Loop, RMS-343 Color: Black
Standard Pack: 100 per bag

RKWFA-16-300
Kwik Wrap on Adhesive Hook & Loop

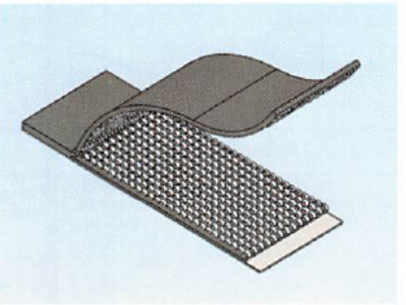

Material: Low Density Polyethylene Hook • Nylon Knit Loop Color: Black
Standard Pack: 100 pieces
Maximum Recommended Holding Dia: .75 (19.05)

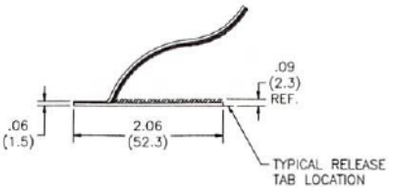

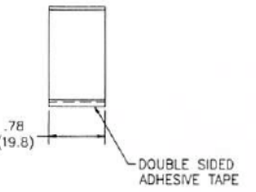

H

FTH-27
Flat Tie Holder for Kwik Wrap

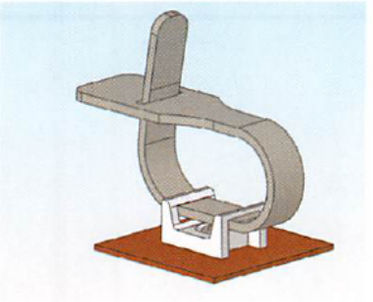

Features
- Mounts hook and loop ties up to 1/2 (12.7) wide

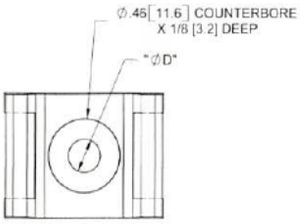

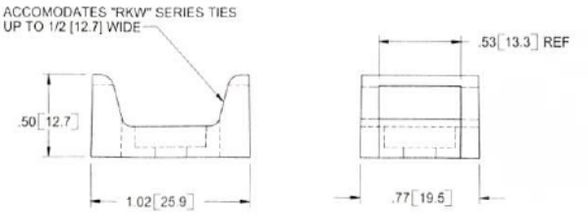

Material: Nylon 6/6 (RMS-01) • Color: Natural		
Part No.	Standard Pack: 1,000 pieces	
	"D" Dia.	Mounting Screw
FTH-27-RS-01	.205 (5.2)	#10 or M5 Screw or Rivets
FTH-27-12-01	.230 (5.8)	#10 or M5 & #12 or M5 Screws or Rivets

MOUNTING RIVETS FOR THE FTH-27RS		
RIVET NO.	HOLE DIA.	PANEL THICKNESS RANGE
SR-5055	.201 (5.1)	.035-.075 (0.9-1.9)
SR-5065		.075-.114 (1.9-2.9)
SR-5075		.114-.154 (2.9-3.9)
SR-5085		.154-.193 (3.9-4.9)
SR-5095		.193-.232 (4.9-5.9)
SR-5105		.232-.272 (5.9-6.9)
See Page 52		

539-4060 San 23
ANGIC
Get quote
Angic Global Solutions 1-888-872-0690
https://www.AngicGlobal.com Sales@AngicGlobal.com

FTH/MFTH
Flat Tie Holder

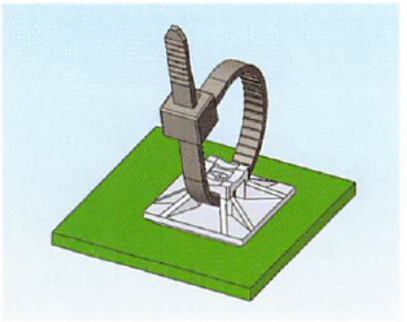

- UL #E71558

Fig. 1

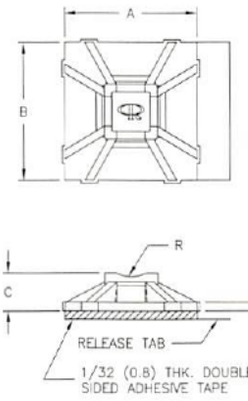

Fig. 2

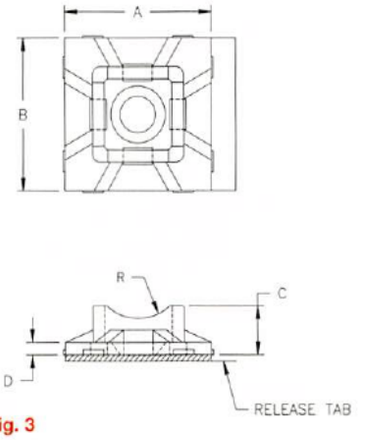

Features
- Used with cable ties to stabilize and secure bundles
- These holders can be mounted to a surface using adhesive or with a screw (except MFTH)
- UVB Nylon 6/6 material is for outdoor applications

Fig. 3

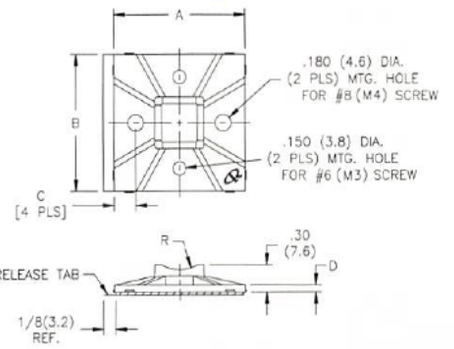

Part No. Prefix			Fig.	Used with Ties	"A"	"B"	"C"	"D"	"R"	Recommended Mounting Screw	Material Variations		Standard Package Suffix	
Holder Material: Nylon 6/6, RMS-01 Color: Natural											UVB Nylon 6/6, RMS-46 Color: Black	UL94 V0 Nylon 6/6, RMS-19 Color: Natural		
Adhesive Mat'l: Acrylic, RMS-15	Adhesive Mat'l: Rubber, RMS-102	Screw Mount									-UVB	-19	-C	-M
MFTH-2-01A-RT	MFTH-2-01A1-RT	N/A	1	WIT-18	.50 (12.7)	.50 (12.7)	.14 (3.5)	.031 (0.8)	1/8 (3.2)	N/A	Special	Special	100	1,000
FTH-5A-RT	FTH-5A1-RT	FTH-5-01	2	WIT-18 thru 40; QTE-18	.75 (19.1)	.75 (19.1)	.24 (6.1)	.06 (1.5)	1/4 (6.4)	#6 or M3	Standard			
FTH-7A-RT	FTH-7A1-RT	FTH-7-01	2	WIT-50, 60; QTE-50	1.00 (25.4)	1.00 (25.4)	.28 (7.1)	.08 (2)	3/8 (9.5)	#8 or M4	Standard, Special in Rubber Adhesive			
FTH-8A-RT	-	FTH-8-01	3	WIT-50 thru 120;	1.50 (38.1)	1.50 (38.1)	.25 (6.35)		7/16	#6 or M3 or	Special			
FTH-10A-RT	-	FTH-10-01	3	All QTE	2.00 (50.8)	2.00 (50.8)	.325 (8.26)		(11.1)	#8 or M4				
Other Adhesives are available by special order.														

FTH-4
Flat Tie Holder with Swivel

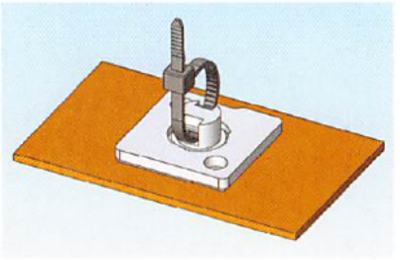

Features
- Unique swivel head allows 360° rotation of the mounted bundle
- Swivel also facilitates easy re-routing

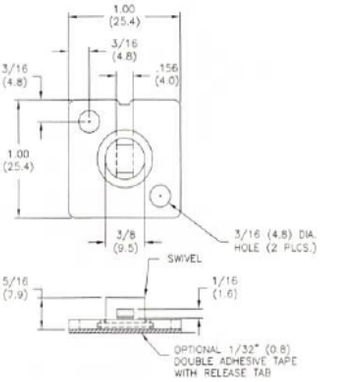

Part No. Prefix		Used with Ties	"A"	"B"	"C"	Recommended Mounting Screw	Material Variations		Standard Package Suffix	
Holder Material: Nylon 6/6, RMS-01 Color: Natural							UVB Nylon 6/6, RMS-46 Color: Black	UL94 V0 Nylon 6/6, RMS-19 Color: Natural		
Adhesive Mat'l: Acrylic, RMS-15	Screw Mount						-UVB	-19	-C	-M
FTH-4A-RT	FTH-4-01	WIT-18 thru 40; QTE-18	1.00 (25.4)	1.00 (25.4)	.31 (4.8)	#8 or M4	Special	Special	100	1,000
Other adhesives available by special order.										

800-621-1892
Get quote
Angic Global Solutions 1-888-872-0690
https://www.AngicGlobal.com Sales@AngicGlobal.com

FTH
Flat Tie Holder

• UL #E71558

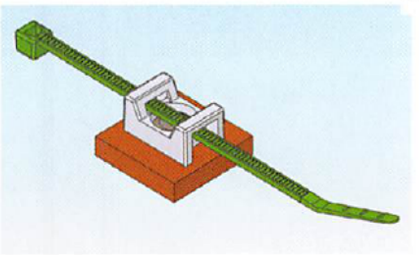

Features
- Cradle design provides stability to the wire bundle
- Can be mounted with a screw or rivet (see chart)

Fig. 1

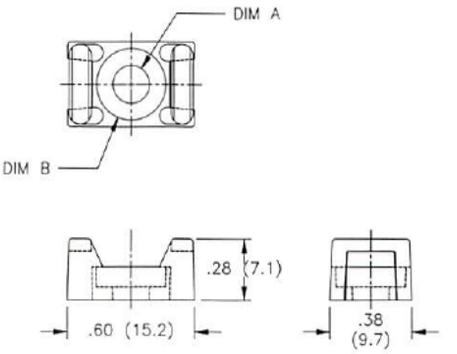

Fig. 2

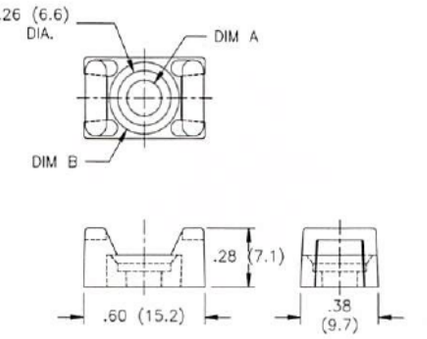

MOUNTING RIVETS FOR FTH -13R-01		
RIVET NO.	HOLE DIA.	PANEL THICKNESS RANGE
SR-4050	.161 (4.1)	.018 - .058 (0.5 - 1.5)
SR-4060		.058 - .097 (1.5 - 2.5)
SR-4070		.097 - .137 (2.5 - 3.5)
SR-4080		.137 - .176 (3.5 - 4.5)
SR-4100		.215 - .255 (5.5 - 6.5)
See Page 52		

Fig. 3

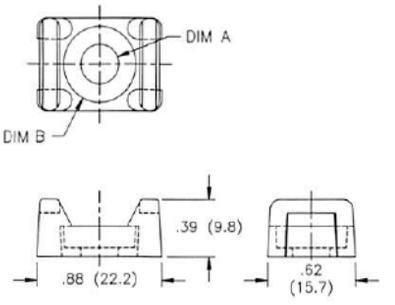

MOUNTING RIVETS FOR FTH -14R-01		
RIVET NO.	HOLE DIA.	PANEL THICKNESS RANGE
SR-5055	.201 (5.1)	.020 - .048 (0.5 - 1.2)
SR-5065		.048 - .087 (1.2 - 2.2)
SR-5075		.087 - .127 (2.2 - 3.2)
SR-5085		.127 - .166 (3.2 - 4.2)
SR-5095		.166 - .205 (4.2 - 5.2)
SR-5105		.205 - .245 (5.2 - 6.2)
See Page 52		

Standard Mat'l: Nylon 6/6, RMS-01* Color: Natural	Fig.	Used with Ties	"A" Dia.	"B" Dia.	Recommended Mounting Method	Material Variations: UVB Stabilized Nylon 6/6, RMS-46 Color: Black -UVB	Material Variations: Flame Retardant Nylon 6/6, RMS-19 Color: Natural -19	Standard Package Suffix: -C	Standard Package Suffix: -M
FTH-13R-01	1	WIT-18 thru 60; QTE-18 thru 50	.17 (4.3)	.32 (8.1) C'bore	Rivet, See Table	Special	Special	100	1,000
FTH-13S-01	2			.32 (8.1) C'sink	#6 or M3 Flat or #8 or M4 Flat/Pan-head Screw				
FTH-14R-01	3	WIT-18 thru 120; All QTE	.21 (5.2)	.38 (9.5) C'bore	Rivet, See Table				
FTH-14S-01			.26 (6.6)	.49 (12.5) C'bore	1/4 or M6 Round or Pan-head Screw				

*UL94 V0 material available by special order only. To order, replace -01 with -19.

H

FTH-28RS-01
Flat Tie Holder

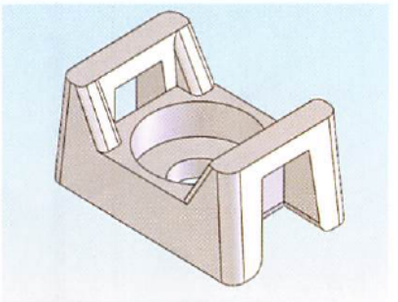

Features
- Holder mounts with a SR-30XX series rivet (see table) or a #4 or M3 screw
- Accepts WIT-18 and QTE-18 ties

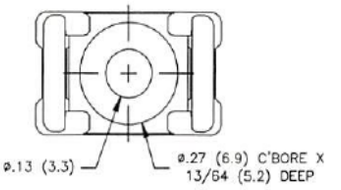

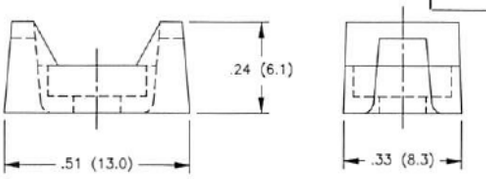

MOUNTING RIVETS FOR THE FTH-28RS		
RIVET NO.	HOLE DIA.	PANEL THICKNESS RANGE
SR-3035	.122-.126 (3.1-3.2)	UP TO .034 (0.9)
SR-3045		.034-.073 (0.9-1.9)
SR-3055		.073-.113 (1.9-2.9)
SR-3065		.113-.152 (2.9-3.9)
SR-3075		.152-.191 (3.9-4.9)
SR-3080		.172-.211 (4.4-5.4)
SR-3090		.211-.250 (5.4-6.4)
SR-3100		.250-.290 (6.4-7.4)
See Page 52		

Material: Nylon 6/6, RMS-01* Color: Natural
Standard Pack: 1,000 per bag
*UL94 V0 material available by special order only. To order, replace -01 with -19.

539-4060 Sam
Get quote
Angic Global Solutions 1-888-872-0690
https://www.AngicGlobal.com Sales@AngicGlobal.com

FTH-1-01
Flat Tie Holder, Screw Mount

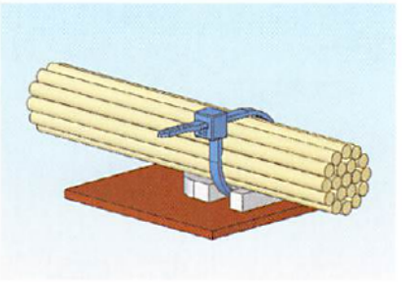

- UL #E71558

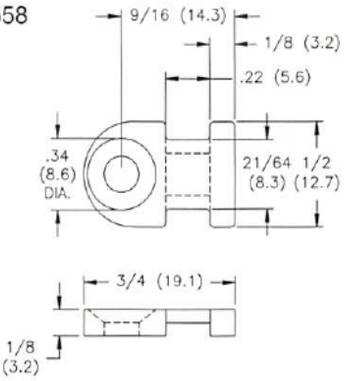

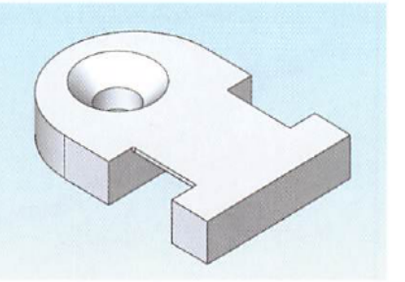

Features
- Low profile for use where space is limited
- Mounts with a #8-32 or M4 flat head screw
- Accepts WIT-18 thru -50 and QTE-18 thru -50 ties

Material: Nylon 6/6, RMS-01* • Color: Natural
Standard Pack: 100 (-C) or 1,000 (-M) per bag. Specify suffix when ordering.
*UL94 V0 material available by special order only. To order, replace -01 with -19.

FTH-17-8-01
Flat Tie Holder, Heavy Duty Screw Mount

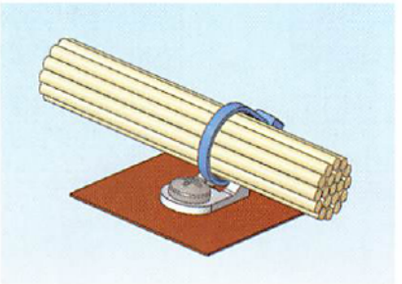

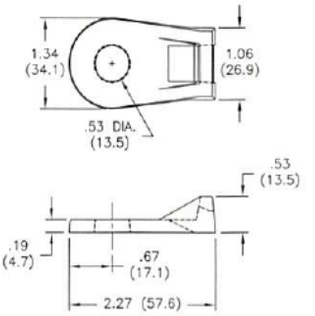

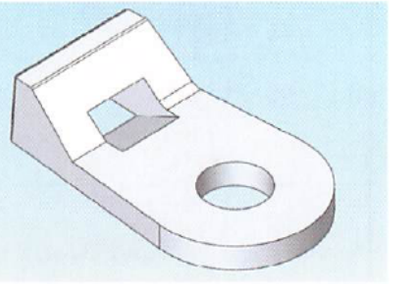

Features
- Used in heavy duty applications
- Accepts all WIT and QTE ties

Material: Nylon 6/6, RMS-01* Color: Natural
Standard Pack: 100 per bag
*UL94 V0 material available by special order only. To order, replace -01 with -19.

FTH-11
Flat Tie Holder, Screw Mount

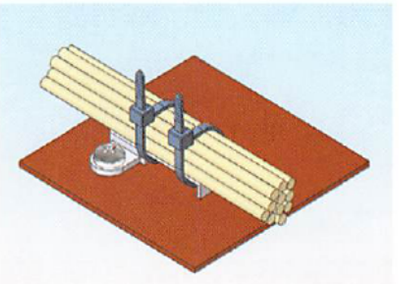

- UL #E71558

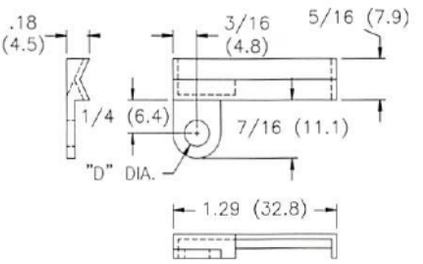

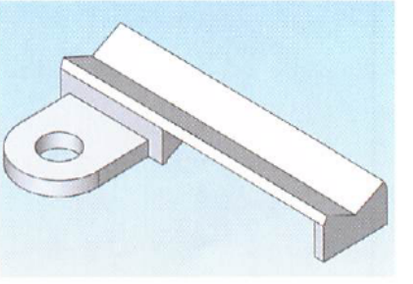

Features
- Harness lays snugly in V-groove
- Attach harness to holder with various cable ties
- Accepts WIT-18 thru -60 and QTE-18 thru -50 ties

Material: Nylon 6/6, RMS-01* • Color: Natural		
Part No.	Standard Pack: 100 per Bag	
	"D" Dia.	Recommended Mounting Screw
FTH-11-8-01	.170 (4.3)	#8 or M4
FTH-11-10-01	.195 (5)	#10 or M5
*UL94 V0 material available by special order only. To order, replace -01 with -19.		

800-621-1892
Angic Global Solutions 1-888-872-0690
https://www.AngicGlobal.com Sales@AngicGlobal.com
Get quote

FTH-24-01
Flat Tie Holder, Screw Mount

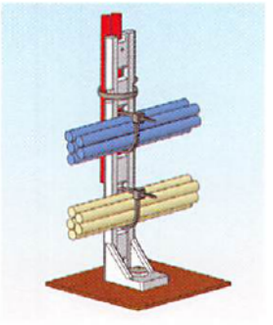

• UL #E71558

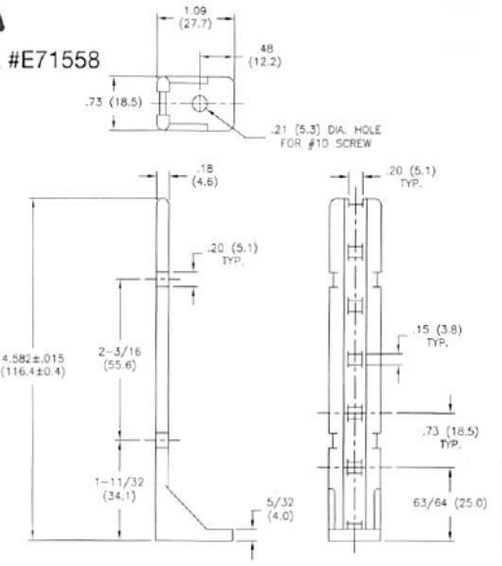

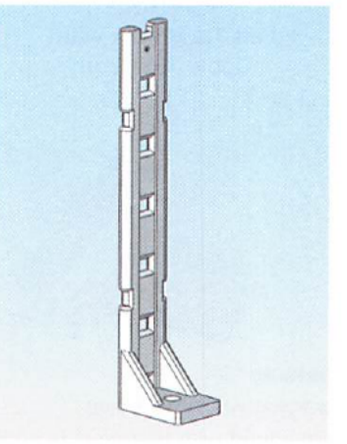

Features
- Mounts multiple harnesses above or away from surface
- Accepts WIT-18 thru -60 and QTE-18 thru -50 ties

Material: Nylon 6/6, RMS-01* • Color: Natural
Standard Pack: 100 per bag
*UL94 V0 material available by special order only. To order, replace -01 with -19.

FTH-22-01
Flat Tie Holder, Self-Mount

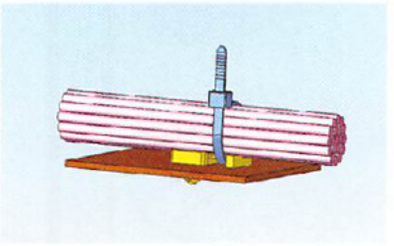

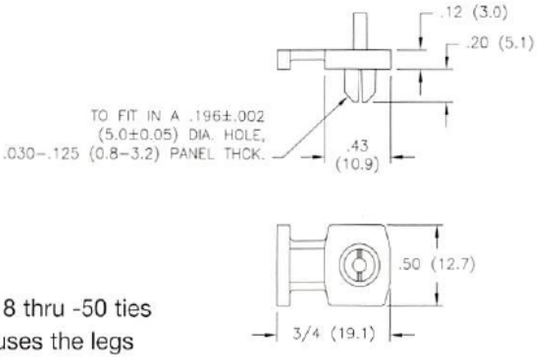

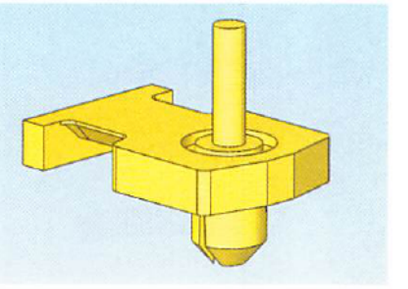

Features
- Accepts WIT-18 thru -60 and QTE-18 thru -50 ties
- Driving the plunger into the rivet causes the legs to expand and grip the panel

Material: Nylon 6/6, RMS-01* • Color: Yellow
Standard Pack: 1,000 per bag
*UL94 V0 material available by special order only. To order, replace -01 with -19.

H

FTH-2A-RT
Flat Tie Holder on Adhesive Base

• UL #E71558

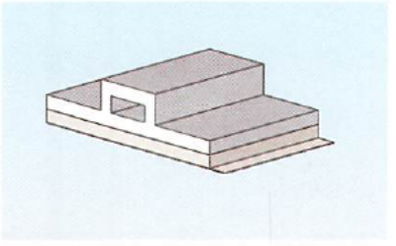

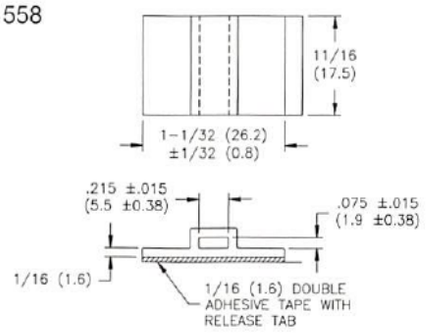

Features
- Accepts WIT-18 thru -60 and QTE-18 thru -50 ties
- Double adhesive tape provides quick mounting

Material: Noryl, RMS-05 • Color: White
Standard Pack: 100 (-C) or 1,000 (-M) per bag. Specify suffix when ordering
Acrylic Adhesive Tape, RMS-15

539-4060 Sam
Get quote
Angic Global Solutions 1-888-872-0690
https://www.AngicGlobal.com Sales@AngicGlobal.com

FTH-30
Flat Tie Holder with Cable Tie Head

NEW

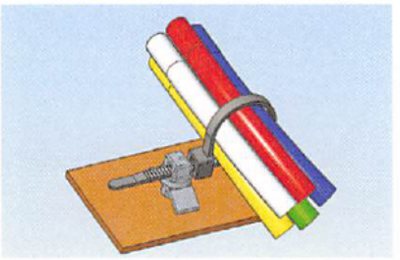

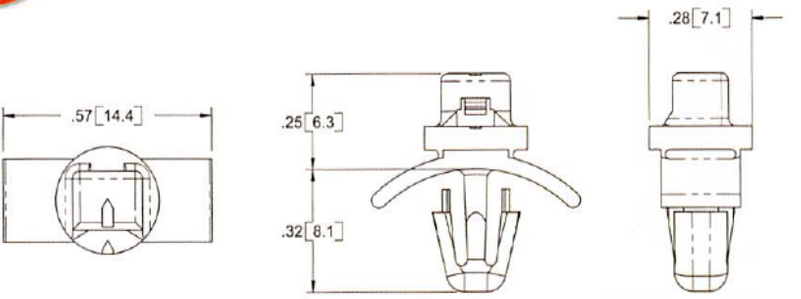

Features
- Accepts all WIT-18 ties
- Designed with teeth inside so that it can hold the end of a cable tie the same way as a cable tie head
- Good for application in which a bundle is already wrapped. Simply insert the end of the cable tie for secure hold

Mat'l: Nylon 6/6, RMS-01* Color: Natural	
Part No.	Standard Pack: 1,000 per bag Hole Dia. ± .003 (.08)
FTH-30-01	.187 (4.76)
*Parts are available in UL94 V0 material by special order only. To order, replace -01 with -19.	

FTH-9-01
Flat Tie Holder

- UL #E71558

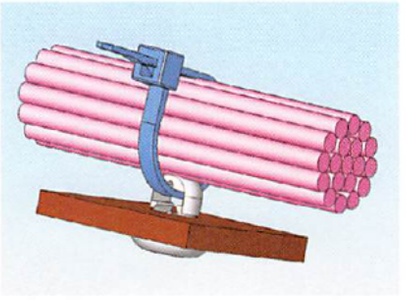

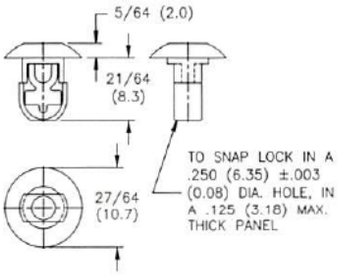

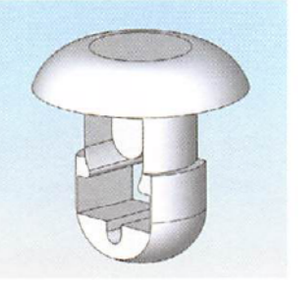

Features
- For use when both sides of the panel are accessible
- Accepts WIT-18 thru -60 and QTE-18 thru -50 ties

Material: Nylon 6/6, RMS-01* • Color: Natural
Standard Pack: 100 (-C) or 1,000 (-M) per bag. Specify suffix when ordering.
*UL94 V0 material available by special order only. To order, replace -01 with -19.

H

FTH-15-01
Flat Tie Holder, Blind Hole

- UL #E71558

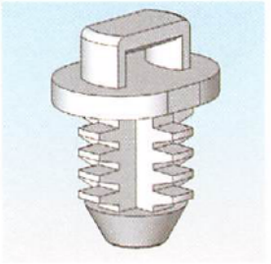

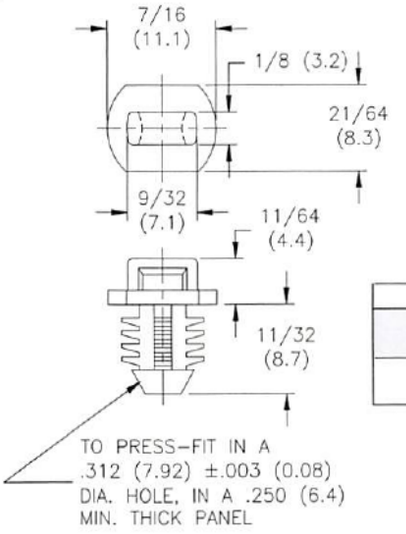

Features
- Flexible ribs lock into round, oval, threaded, punched, drilled blind holes
- Blunt tip allows maximum grip in blind holes with minimum protrusion in pass-through applications
- Accepts WIT-18 thru -40 and QTE-18 ties

Material: Nylon 6/6, RMS-01* • Color: Natural
Standard Pack: 100 (-C) or 1,000 (-M) per bag. Specify suffix when ordering.
*UL94 V0 material available by special order only. To order, replace -01 with -19.

800-621-1892
ANGIC
Get quote
Angic Global Solutions 1-888-872-0690
https://www.AngicGlobal.com Sales@AngicGlobal.com

FTH-6-01
Flat Tie Holder, Arrowhead

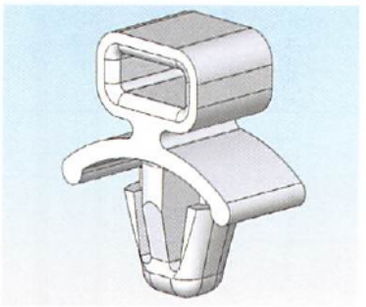

- UL #E71558

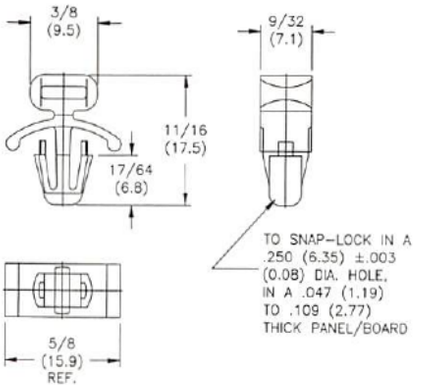

Features
- Inserted into drilled or punched holes
- Tension wings provide a tight fit to board
- Accepts WIT-18 thru -60 and QTE-18 thru -50 ties

Material: Nylon 6/6, RMS-01* • Color: Natural
Standard Pack: 100 (-C) or 1,000 (-M) per bag. Specify suffix when ordering.
*UL94 V0 material available by special order only. To order, replace -01 with -19.

FTH-3-01
Flat Tie Holder, Arrowhead

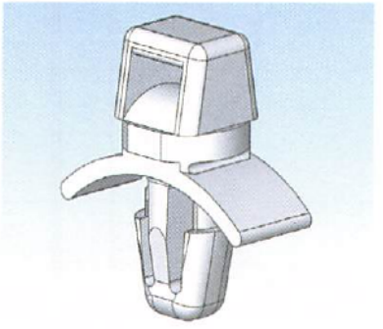

- UL #E71558

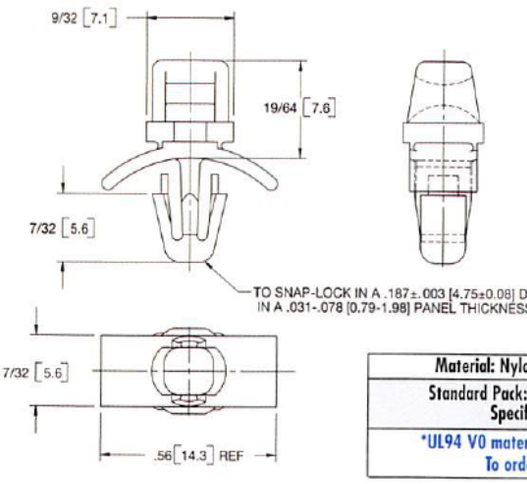

Features
- Accepts WIT-18 thru -40 and QTE-18 ties

Material: Nylon 6/6, RMS-01* • Color: Natural
Standard Pack: 100 (-C) or 1,000 (-M) per bag. Specify suffix when ordering.
*UL94 V0 material available by special order only. To order, replace -01 with -19.

H

FTH-29-01
Flat Tie Holder, Cupped Base

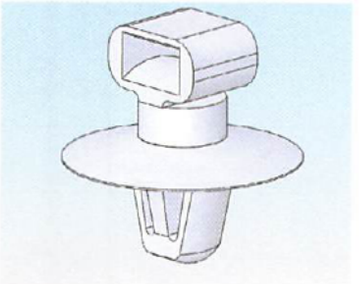

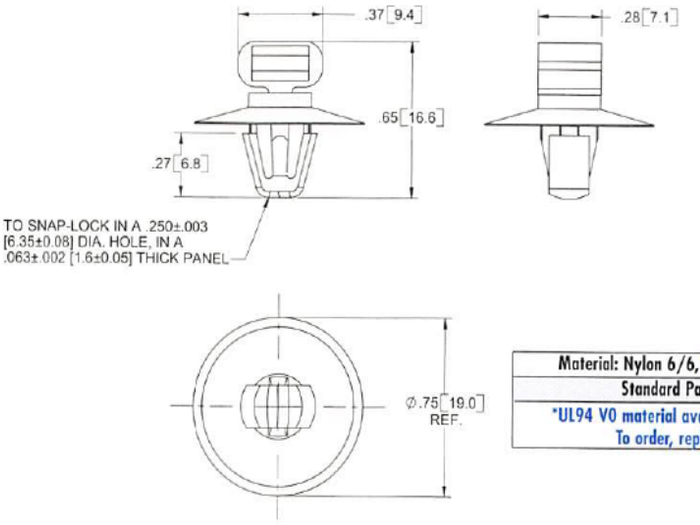

Features
- Cupped base gives extra tensioning to the board as well as providing splash-proof protection
- Accepts WIT-18 thru -60 and QTE-18 & -50 ties

Material: Nylon 6/6, RMS-01* • Color: Natural
Standard Pack: 1,000 per bag
*UL94 V0 material available by special order only. To order, replace -01 with -19.

539-4060 Sam
Get quote
Angic Global Solutions 1-888-872-0690
https://www.AngicGlobal.com Sales@AngicGlobal.com

Notes

-800-621-1892
Get quote
Angic Global Solutions 1-888-872-0690
https://www.AngicGlobal.com Sales@AngicGlobal.com

General Features

Richco provides a comprehensive range of wire, cable and hose management products in both plastic and metal materials. Products are available with both fixed and adjustable holding diameters. Richco offers plastic clips, clamps, wire saddles and curly lock designs in addition to innovative products such as Cableater (SHR). These parts have a wide variety of mounting methods including self-adhesive tape, screws, rivets, blind hole, and push through arrowhead designs.

Typical Applications

- Automotive – Air bags, under hood routing and audio applications
- Consumer Electronics / Brown Goods – Audio and video equipment
- Office Equipment – Computers, computer peripherals, TV and associated products, and photocopiers
- White Goods – Microwaves, washing machines, ovens, food preparation equipment, refrigerators
- Telecommunications Equipment – Distribution racks and patch panels

Materials

Most of Richco's plastic clips and clamps are manufactured in Nylon 6/6, RMS-01 as a standard. Most of the parts that are manufactured in this material can also be ordered in various other materials by special order.

For more details on material properties please consult the materials data section of the catalog. Should you require a part to be manufactured in a different material which is not shown in the catalog, please contact your local Richco office to discuss your requirements.

Material	UL94 Flammability Rating	RoHS Compliance	RMS
Nylon 6/6	V2	Yes	01
Flame Retardant Nylon	V0	Yes	19

Adhesive Application Reminders

For those products in this section with an adhesive base/surface, please follow the application procedures found in the back of this catalog.

The bonding surfaces must be clean, uniform, dry and free of condensation. Do not use on fabric, course concrete, loose paint, or rough, loose surfaces.

Surface Preparation: For maximum performance, clean the mounting surfaces with a cleaning solvent such as a 50/50 mixture of isopropyl alcohol and water. Be sure to follow the solvent manufacturer's directions for use. Some surfaces may require a sealant or primer to achieve the desired bonding. Test the product on your actual application.

Application pressure: Remove the release liner being very careful not to touch the adhesive surface and then quickly and firmly rub the product into place. Firm pressure is needed to ensure full contact and to allow the adhesive to fully wet-out on the mating surfaces.

Dwell Time: The bond strength is affected by the substrate surface, application temperature and dwell time. At room temperature approximately half of the bond strength will be obtained within the first half hour with the majority of the strength achieved within 24 hours. Therefore, whenever possible wait 24 hours before applying a load.

Introduction

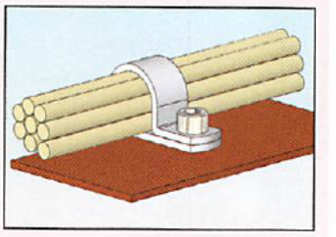

Cable Clamps

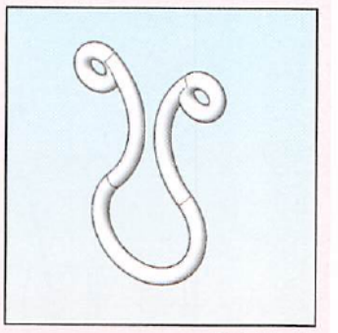

Twist Locks

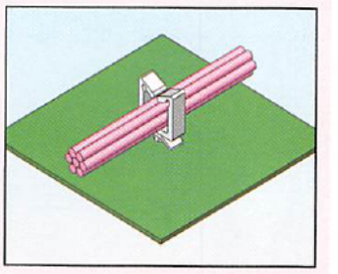

Wire Saddles

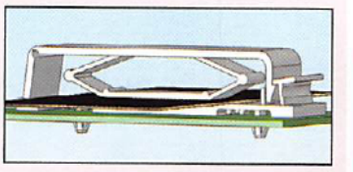

Flat Cable Clamps

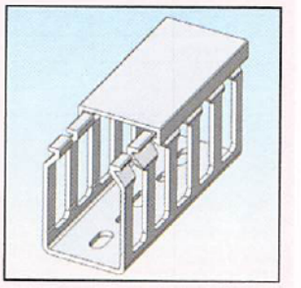

Cable Ducts

I

39-4060 Samp
ANGIC
Get quote
Angic Global Solutions 1-888-872-0690
https://www.AngicGlobal.com Sales@AngicGlobal.com

N/NB/E
Cable Clamps

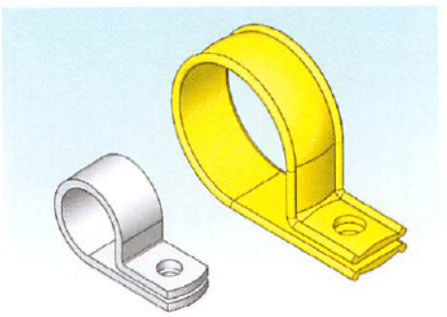

Fig. 1

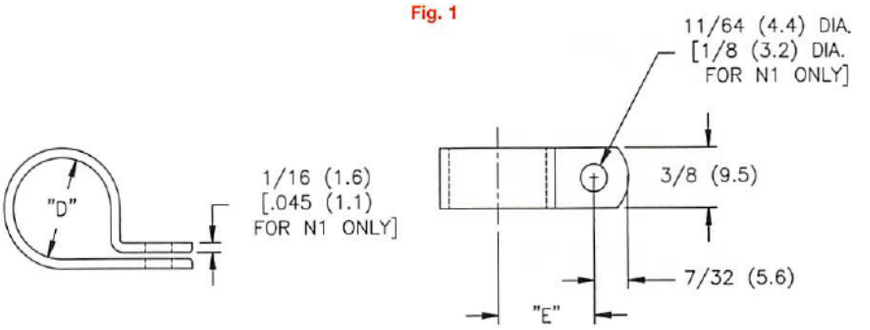

Fig. 2

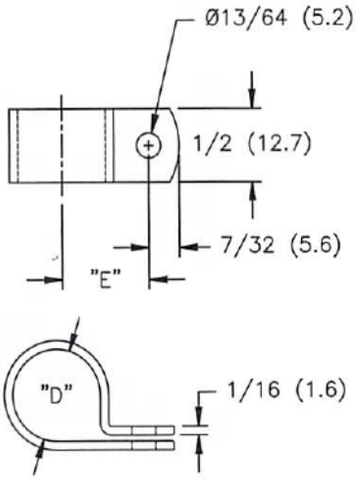

Fig. 3

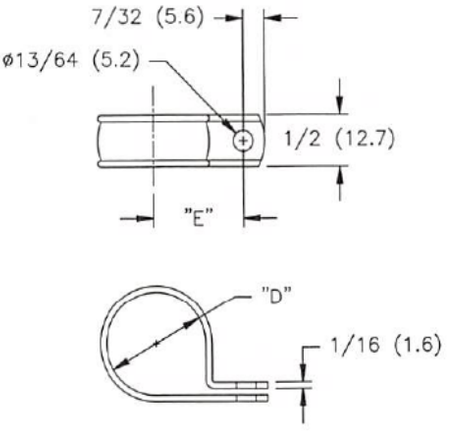

N (Fig. 1)		NB (Fig. 2)			E (Fig. 3)				
Mat'l: Nylon 6/6, RMS-01* Color: Natural	Mat'l: Nylon 6/6, RMS-01* Color: Black	Mat'l: Nylon 6/6, RMS-01 Color: Natural	Mat'l: Nylon 6/6, RMS-01 Color: Black	Mat'l: Nylon 6/6, RMS-46, UL94 V0 Rated Color: Natural	Mat'l: Propionate, RMS-12 Color: Clear	Mat'l: Propionate, RMS-12 Color: Amber	"E" Ref.	"D" Holding Dia.	Standard Pack
N-1	N-1-BK	Not Available	Not Available	Not Available	Not Available	Not Available	.27 (6.9)	1/16 (1.6)	1000 per bag
N-2	N-2-BK	N-2B	N-2B-BK	Special Order	E2-CL	E2-AM	21/64 (8.3)	1/8 (3.2)	
N-3	N-3-BK	N-3B	N-3B-BK	N-3B-75	E3-CL	E3-AM	25/64 (9.9)	3/16 (4.8)	
N-4	N-4-BK	N-4B	N-4B-BK	N-4B-75	E4-CL	E4-AM	27/64 (10.7)	1/4 (6.4)	
N-5	N-5-BK	N-5B	N-5B-BK	N-5B-75	E5-CL	E5-AM	29/64 (11.5)	5/16 (7.9)	
N-6	N-6-BK	N-6B	N-6B-BK	N-6B-75	E6-CL	E6-AM	31/64 (12.3)	3/8 (9.5)	
N-7	N-7-BK	N-7B	N-7B-BK	Special Order	E7-CL	E7-AM	17/32 (13.5)	7/16 (11.1)	
N-8	N-8-BK	N-8B	N-8B-BK	N-8B-75	E8-CL	E8-AM	9/16 (14.3)	1/2 (12.7)	
Not Available	Not Available	N-9B	N-9B-BK	Special Order	E9-CL	E9-AM	19/32 (15.0)	9/16 (14.3)	
Not Available	Not Available	N-10B	N-10B-BK	N-10B-75	E10-CL	E10-AM	5/8 (15.9)	5/8 (15.9)	
Not Available	Not Available	N-11B	N-11B-BK	Special Order	Special Order	Special Order	21/32 (16.7)	11/16 (17.5)	
Not Available	Not Available	N-12B	N-12B-BK	Special Order	Special Order	Special Order	49/64 (19.4)	3/4 (19.1)	
Not Available	Not Available	N-14B	N-14B-BK	Special Order	Special Order	Special Order	13/16 (20.6)	7/8 (22.2)	500 per bag
Not Available	Not Available	N-16B	N-16B-BK	Special Order	Special Order	Special Order	29/32 (23)	1 (25.4)	
Not Available	Not Available	N-18B	N-18B-BK	Special Order	Special Order	Special Order	31/32 (24.6)	1-1/8 (28.6)	

*Available in UV Stabilized material, RMS-46. To order, add -UVB.

1-800-621-1892
Get quote
Angic Global Solutions 1-888-872-0690
https://www.AngicGlobal.com Sales@AngicGlobal.com

NB-3
Adjustable Nylon Cable Clamps

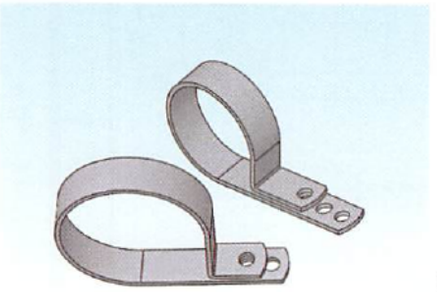

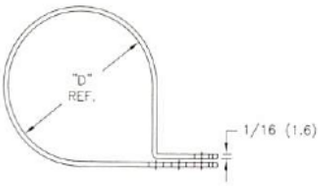

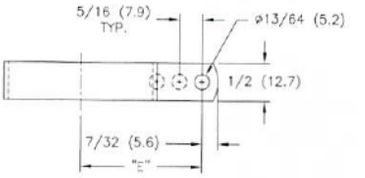

Features
- Three hole feature allows for three different holding diameters for each clamp

Part No.		Standard Pack: 500 per bag			
Nylon 6/6, RMS-01* Color: Natural	Nylon 6/6, RMS-01 Color: Black	Dim. "E"	"D" Holding Dia. (Ref.)		
			Inside	Middle	Outside
N-20B	N-20B-BK	1.0 (25.4)	1.0 (25.4)	1-1/8 (28.6)	1.2 (30.5)
N-24B	N-24B-BK		1-1/4 (31.8)	1-3/8 (34.9)	1-1/2 (38.1)
N-32B	N-32B-BK	1-1/2 (38.1)	1-3/4 (44.5)	1-7/8 (47.6)	2.0 (50.8)
*UL94 V0 Nylon, RMS-19 available by special order. To order add -19 to the end of the part no.					

WHC
Wire Harness Clamps

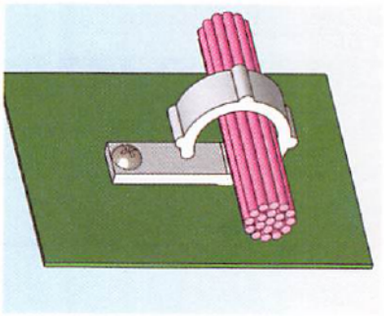

WHC-125-01

WHC-250-01 TO 1500-01

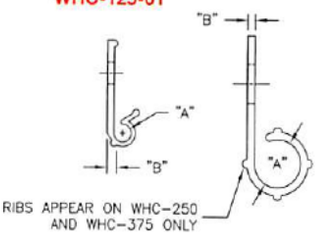

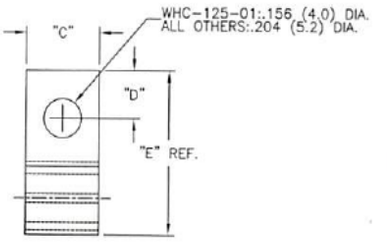

• UL #E71558

Features
- Cable and wire can be installed or removed for repair without removing clamp
- Mounts securely with screw or rivet

Material: Nylon 6/6, RMS-01* • Color: Natural						
Part No.	"A" Holding Diameter	"B"	"C"	"D"	"E" Ref.	Standard Pack
WHC-125-01	1/8 (3.2)	.05 (1.3)	.33 (8.4)	.23 (5.8)	.75 (19.1)	1,000 per bag
WHC-250-01	1/4 (6.4)	.04 (1)	.40 (10.2)	.25 (6.4)	.83 (21.1)	
WHC-375-01	3/8 (9.5)	.05 (1.3)		.19 (4.8)	.83 (21.1)	
WHC-500-01	1/2 (12.7)	.07 (1.8)		.25 (6.4)	1 - 5/32 (29.4)	
WHC-625-01	5/8 (15.9)	.08 (2)	.50 (12.7)	.19 (4.8)	1 - 1/8 (28.6)	
WHC-750-01	3/4 (19.1)	.08 (2)			1 - 9/32 (32.5)	
WHC-1000-01	1 (25.4)	.09 (2.3)			1 - 17/32 (38.9)	500 per bag
WHC-1500-01	1 - 1/2 (38.1)	.10 (2.5)			2 - 1/8 (53.9)	
*UL94 V0 Nylon, RMS-19 available by special order. To order, replace -01 with -19.						

EXWHC
Extruded Wire Harness Clamps

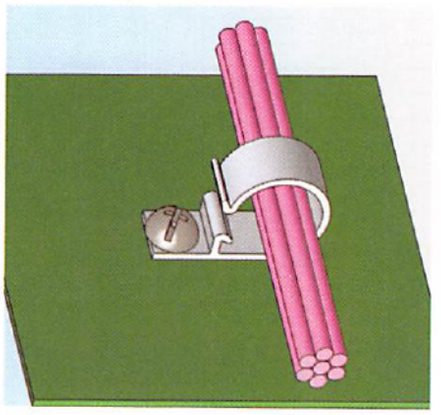

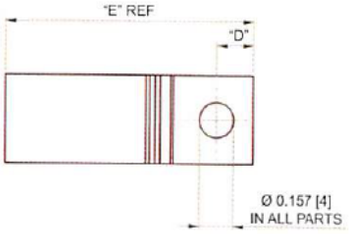

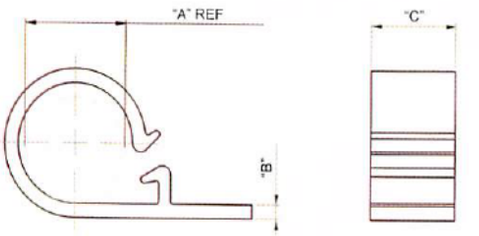

Features
- Latching feature allows for easy insertion and removal of cable

Material: PVC, RMS-193 • Color: Off White					
Part No.	Standard Pack: 1,000 per bag				
	"A" Holding Dia.	"B"	"C"	"D"	"E" Ref.
EXWHC-250*	.25 (6.35)	.04 (1)	.394 (10)	.24 (6)	.827 (21)
EXWHC-500	.50 (12.7)	.06 (1.6)		.17 (4.3)	1.15 (29.2)
EXWHC-750	.75 (19)		.50 (12.7)	.165 (4.2)	1.33 (33.8)
*EXWHC-250 is produced with no latch feature					

Get quote
Angic Global Solutions 1-888-872-0690
https://www.AngicGlobal.com Sales@AngicGlobal.com

SPN/SPNW

Steel Clamp with Rubber Cushion

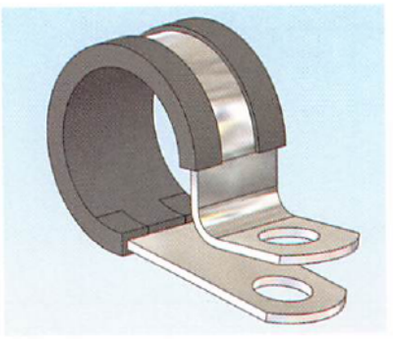

SPN

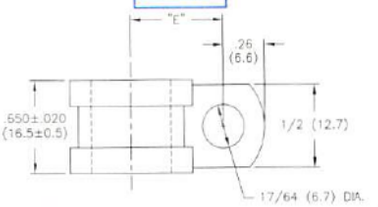

SPNW

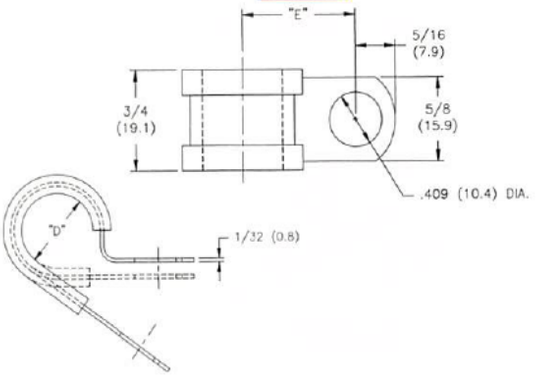

Features

- TPE meets MIL R-3065 and AMS-3209 specifications
- Cushion provides electrical insulation and vibration absorption

Mat'l: Cold Rolled Steel (CRS) RMS-198, Santoprene Cushion, RMS-67, Finish: Zinc Electroplated, RMS-339, Color: Silver with Black Santoprene Cushion					
SPN	**"E" Ref.**	**"D" Holding Dia.**	**SPNW**	**"E" Ref.**	**"D" Holding Dia.**
SPN-3	.50 (12.7)	3/16 (4.8)	—	—	—
SPN-4	.53 (13.5)	1/4 (6.4)	SPNW-4	.63 (16.0)	1/4 (6.4)
SPN-5	.56 (14.2)	5/16 (7.9)	SPNW-5	.66 (16.8)	5/16 (7.9)
SPN-6	.59 (15.0)	3/8 (9.5)	SPNW-6	.69 (17.5)	3/8 (9.5)
SPN-7	.62 (15.7)	7/16 (11.1)	SPNW-7	.72 (18.3)	7/16 (11.1)
SPN-8	.65 (16.5)	1/2 (12.7)	SPNW-8	.75 (19.1)	1/2 (12.7)
SPN-9	.75 (19.1)	9/16 (14.3)	—	—	—
SPN-10	.78 (19.8)	5/8 (15.9)	SPNW-10	.88 (22.4)	5/8 (15.9)
SPN-11	.81 (20.6)	11/16 (17.5)	SPNW-11	.91 (23.1)	11/16 (17.5)
SPN-12	.84 (21.3)	3/4 (19.1)	—	—	—
SPN-14	.90 (22.9)	7/8 (22.2)	SPNW-14	1.00 (25.4)	7/8 (22.2)
SPN-16	.96 (24.4)	1 (25.4)	SPNW-16	1.06 (26.9)	1 (25.4)
SPN-18	1.05 (26.7)	1-1/8 (28.6)	—	—	—
SPN-20	1.11 (28.2)	1-1/4 (31.8)	SPNW-20	1.21 (30.7)	1-1/4 (31.8)
Standard Pack: 500 per bag for SPN-3 to SPN-12, 100 per bag for SPN-14 to SPN-20			Standard Pack: 100 per bag		

AL/NE

Aluminum Clamp/Aluminum Clamp with Vinyl Coating

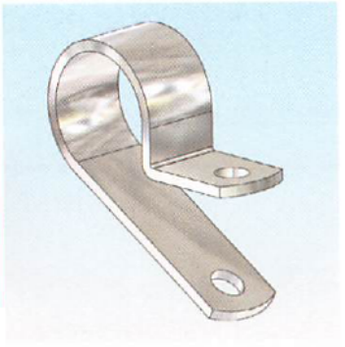

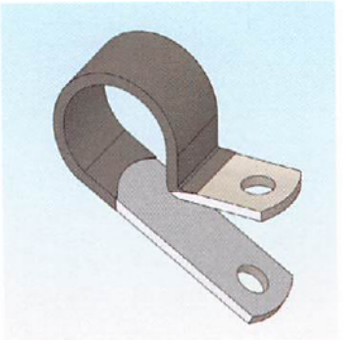

AL

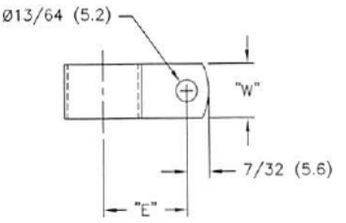

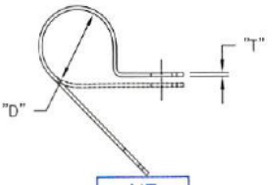

NE

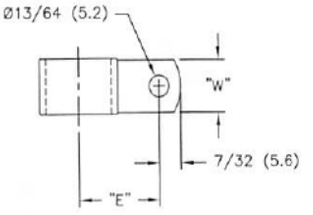

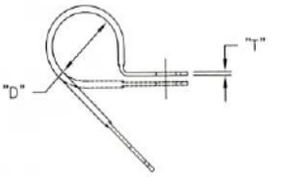

Material: Aluminum Alloy 5052 H-32, RMS-199 Color: AL - Silver, NE -Silver with Black Vinyl Dip, RMS-200						
Part No.		**Holding Dia. "D"**	**"E" Ref.**	**"T"**	**"W"**	**Standard Pack**
AL2	—	1/8 (3.2)	.46 (11.7)	1/32 (0.8)	3/8 (9.5)	1,000 per bag
AL3	NE3	3/16 (4.8)	.50 (12.7)			
AL4	NE4	1/4 (6.4)	.53 (13.5)			
AL5	NE5	5/16 (7.9)	.56 (14.2)			
AL6	NE6	3/8 (9.5)	.59 (15)			
AL7	NE7	7/16 (11.1)	.62 (15.7)			
AL8	NE8	1/2 (12.7)	.65 (16.5)			
AL9	NE9	9/16 (14.3)	.75 (19.1)			
AL10	NE10	5/8 (15.9)	.78 (19.8)			
AL11	NE11	11/16 (17.5)	.81 (20.6)	1/16 (1.6)	1/2 (12.7)	500 per bag
AL12	NE12	3/4 (19.1)	.84 (21.3)			
AL14	NE14	7/8 (22.2)	.90 (22.9)			
AL16	NE16	1 (25.4)	.96 (24.4)			
AL18	NE18	1 - 1/8 (28.6)	1.05 (26.7)			
AL20	NE20	1 - 1/4 (31.8)	1.11 (28.2)			

Features

- NE series: Nominal 1/32 (0.8) vinyl thickness

-800-621-1892
ANGIC
Get quote
Angic Global Solutions 1-888-872-0690
https://www.AngicGlobal.com Sales@AngicGlobal.com

V
Component Clip - Extruded

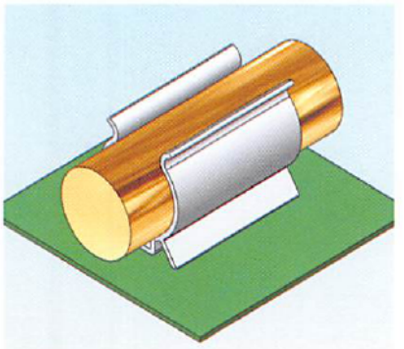

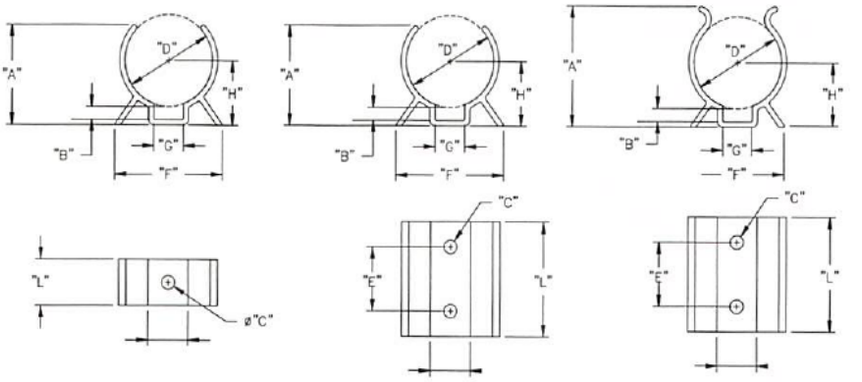

Fig. 1 Fig. 2 Fig. 3

Features
- Holds capacitors, resistors, lamps, batteries, and fuses
- Mounts securely with screws or rivets
- Legs help maintain tension

Material: PVC, RMS-04 • Color: Black												
Part No.	"D" Holding Diameter	Length "L"*	Height "A" Ref.	"B" Ref	"C" Hole Dia.	"E"	"F" Ref.	"G" Ref.	"H" Ref.	Wall Thk. Ref.	Standard Pack	Fig.
V-1000	.25 (6.4)	.50 ±.03 (12.7 ±0.8)	.30 (7.5)	.04 (1)	.094 (2.4)	Single Hole In Center	.50 (12.7)	.19 (4.8)	.19 (4.8)	.040 (1)	1,000 per bag	1
V-1001	.31 (7.9)		.36 (9.1)	.06 (1.5)					.25 (6.4)	.045 (1.1)		
V-1002	.38 (9.5)		.41 (10.3)						.29 (7.4)			
V-1003	.44 (11.1)		.45 (11.5)				.52 (13.1)		.36 (9.1)			
V-1004	.50 (12.7)		.50 (12.7)				.66 (16.7)	.22 (5.6)	.34 (8.6)	.050 (1.3)		
V-1005	.56 (14.3)		.61 (15.5)				.72 (18.3)		.38 (9.7)			
V-1006	.63 (15.9)		.63 (15.9)				.83 (21)	.25 (6.4)	.43 (10.9)	.060 (1.5)		
V-1007	.69 (17.5)		.63 (15.9)	.04 (1)	.156 (4)		.84 (21.3)	.34 (8.6)	.42 (10.7)	.065 (1.7)		
V-1008	.75 (19.1)		.78 (19.8)	.12 (3)			.89 (22.6)	.36 (9.1)	.53 (13.5)		100 per bag	
V-1009	.88 (22.2)		.91 (23)	.06 (1.5)			1.08 (27.4)	.34 (8.6)	.56 (14.2)			
V-1010	1.00 (25.4)	1.13 ±.03 (28.6 ±0.8)	.98 (25)	.12 (3)		.75 (19.1)	1.13 (28.6)		.70 (17.8)			2
V-1011	1.38 (34.9)		1.34 (34.1)	.19 (4.8)			1.25 (31.8)	.41 (10.4)	.91 (23.1)			
V-1024	1.50 (38.1)	1.75 ±.03 (44.5 ±0.8)	1.81 (46)				1.42 (36.1)	.44 (11.2)	.99 (25.1)	.075 (1.9)		3
V-1028	1.75 (44.5)		1.92 (48.8)	.22 (5.6)			1.50 (38.1)		1.11 (28.2)			
V-1030	2.25 - 2.75 (57.1-69.9)	1.50 ±.03 (38.1 ±0.8)	2.44 (61.9)	.19 (4.8)			2.61 (66.3)	.50 (12.7)	1.56 (35.1)	.093 (2.4)		

*Custom lengths available by special order

VM
Component Clip - Molded

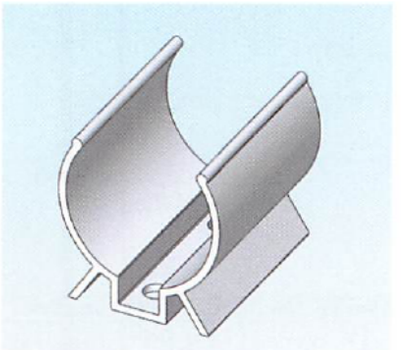

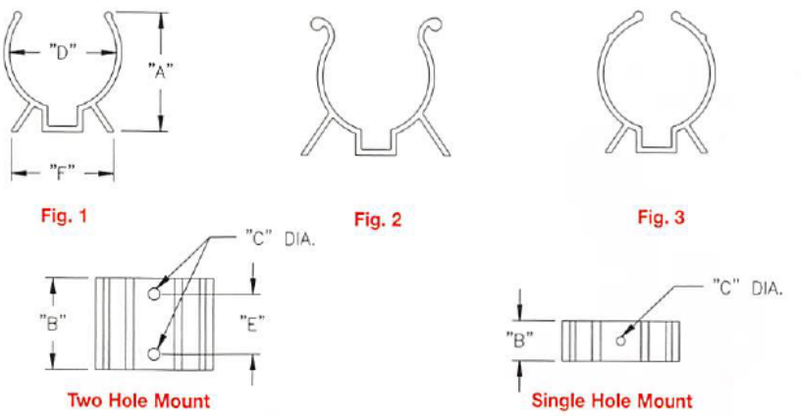

Fig. 1 Fig. 2 Fig. 3

Two Hole Mount Single Hole Mount

Features
- Smooth edges protect components from wear and tear

Material: Nylon 6/6, RMS-01• Color: Black							
Part No.	Standard Pack: 100 per bag						
	"D" Holding Dia.	"A" Ref.	"B" ± .015 (0.4)	"C" ±.010 (0.3)	"E" ± .010 (0.3)	"F" Ref.	Fig.
VM-1002	3/8 (9.5)	.44 (11.2)	.50 (12.7)	.11 (2.8)	Single Hole In Center	.54 (13.7)	1
VM-1004	1/2 (12.7)	.52 (13.2)				.75 (19.1)	
VM-1007	11/16 (17.5)	.78 (19.8)		.15 (3.8)		.82 (20.8)	
VM-1008	3/4 (19.1)	.97 (24.6)				.98 (24.9)	
VM-1010	1 (25.4)	1.03 (26.1)	1.12 (28.4)		.750 (19.1)	1.25 (31.8)	
VM-1011	1 - 3/8 (34.9)	1.51 (38.4)	1.16 29.5)			1.37 (34.8)	
VM-1024	1 - 1/2 (38.1)	1.67 (42.4)	1.70 (43.2)			1.50 (38.1)	3
VM-1030	2 - 1/4 (57.2)	2.50 (63.5)	1.52 (38.6)			3.00 (76.2)	2

539-4060 Sam
Get quote
Angic Global Solutions 1-888-872-0690
https://www.AngicGlobal.com Sales@AngicGlobal.com

HURCS/DHURCS
Screw Mount U Clamps

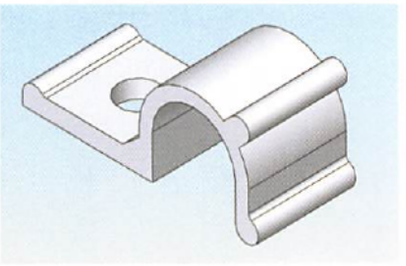

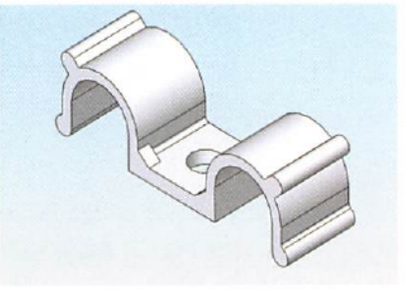

HURCS

Fig. 1

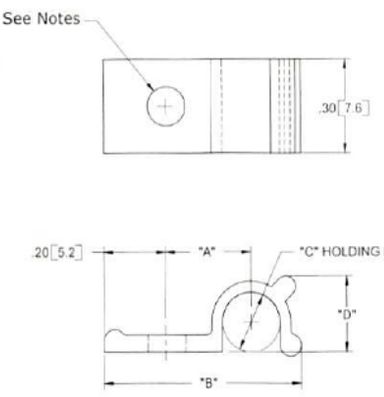

DHURCS

Fig. 2

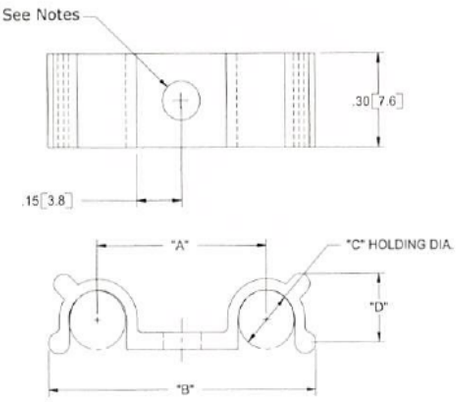

Mounting Notes

.125 ± .002 (3.2 ±.05)
MOUNTING HOLD DIA.
FOR #4 OR M3 SCREW OR
SR-30XX SERIES RIVET

HURCS (Fig. 1)					DHURCS (Fig. 2)				
Standard Pack: 1,000 per bag					Standard Pack: 1,000 per bag				
Mat'l: Nylon 6/6, RMS-01* Color: Natural	"A" Ref.	"B" Ref.	"C" Holding Dia.	"D" Ref.	Mat'l: Nylon 6/6, RMS-01* Color: Natural	"A" Ref.	"B" Ref.	"C" Holding Dia.	"D" Ref.
HURCS-2-01	.25 (6.2)	.59 (15)	1/8 (3.2)	.17 (4.3)	DHURCS-2-01	.49 (12.4)	.75 (19)	1/8 (3.2)	.17 (4.3)
HURCS-3-01	.28 (7.1)	.65 (15.6)	3/16 (4.8)	.24 (6.1)	DHURCS-3-01	.56 (14.2)	.89 (22.6)	3/16 (4.8)	.24 (6.1)
HURCS-4-01	.32 (8.1)	.72 (18.3)	1/4 (6.4)	.30 (7.6)	DHURCS-4-01	.64 (16.2)	1.02 (25.9)	1/4 (6.4)	.30 (7.6)
*UL94 V0 Nylon, RMS-19 available by special order. To order, replace -01 with -19.									
See page 52 for SR series rivets									

VCC
Adjustable Steel Clamp with Vinyl Coating

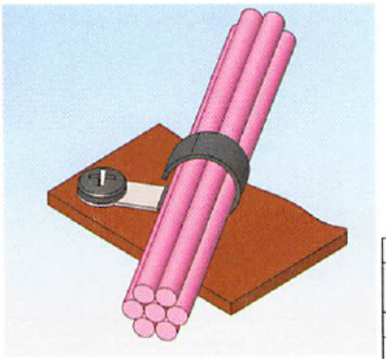

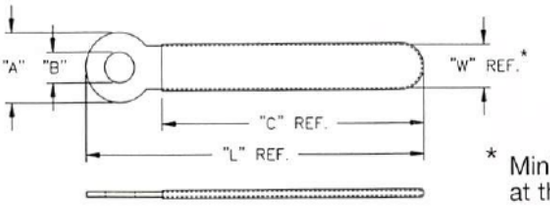

* Minimum drip is allowed at the tip of the part

Features

- Easily bends and forms to desired shape for varying holding diameters
- Flexible material allows for easy closing and re-opening

Material: Body - Soft Steel, RMS-243, Dead Soft .020 (0.5) thick • Coating - *Soft Black PVC, RMS-118, .032 (0.8) thick • Color: Black							
Part No.	Length "L"	"C"	"A"	"B"	"W"	Approx. Bundle Dia.	Standard Pack
VCC-83028	1.10 (27.9)	.71 (18)	.32 (8.1)	.12 (3)	.12 (3)	.22 (5.7)	1,000
VCC-83534	1.34 (34)	.94 (23.9)		.14 (3.5)	.16 (4.1)	.30 (7.6)	
VCC-83535	1.37 (34.8)	.98 (24.9)			.20 (5.1)	.31 (7.9)	
VCC-83540	1.57 (39.9)	1.18 (30)			.12 (3)	.37 (9.5)	
VCC-63048	1.89 (48)	1.57 (39.9)	.24 (6.1)	.12 (3)	.08 (2)	.50 (12.7)	
VCC-84554	2.13 (54.1)	1.65 (41.9)	.32 (8.1)	.18 (4.5)	.19 (4.8)	.52 (13.3)	
VCC-63254	2.13 (54.1)	1.81 (46)	.24 (6.1)	.13 (3.2)	.14 (3.6)	.57 (14.6)	
VCC-83664	2.52 (64)	2.09 (53.1)	.32 (8.1)	.16 (4.1)	.20 (5.1)	.66 (16.9)	
VCC-84576	2.99 (75.9)	2.56 (65)		.18 (4.5)	.18 (4.5)	.81 (20.7)	
VCC-84584	3.31 (84.1)	2.83 (71.9)			.18 (4.5)	.90 (22.9)	
VCC-845126	4.96 (126)	4.41 (112)			.24 (6.1)	1.40 (35.6)	100
*UL94 V0 PVC Coating, RMS-55 coating available by special order.							

1-800-621-1892
Get quote
Angic Global Solutions 1-888-872-0690
https://www.AngicGlobal.com Sales@AngicGlobal.com

SRCC-1
Strain Relief Clamp

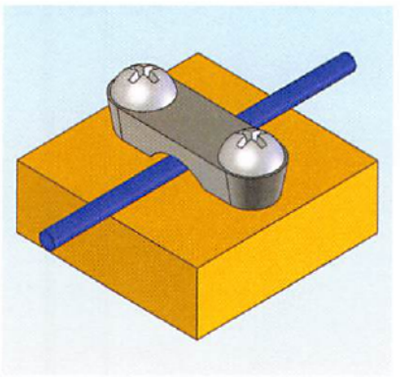

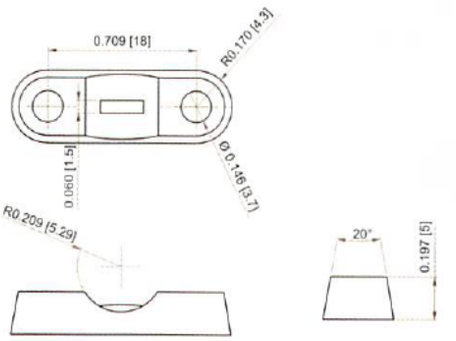

Features
- When maximum cable diameter is installed, provides light strain relief

Mat'l: Nylon 6/6, RMS-48 Color: Grey	
Standard Pack: 1,000 per bag	
Max. Cable Dia.	**Mounting Screws**
.177 (4.5)	M3 or #6

D
Two-Piece Locking Clamp

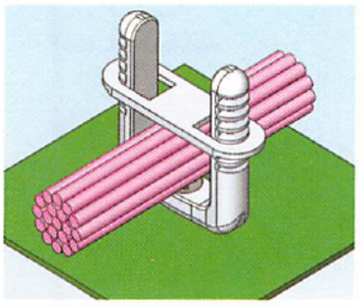

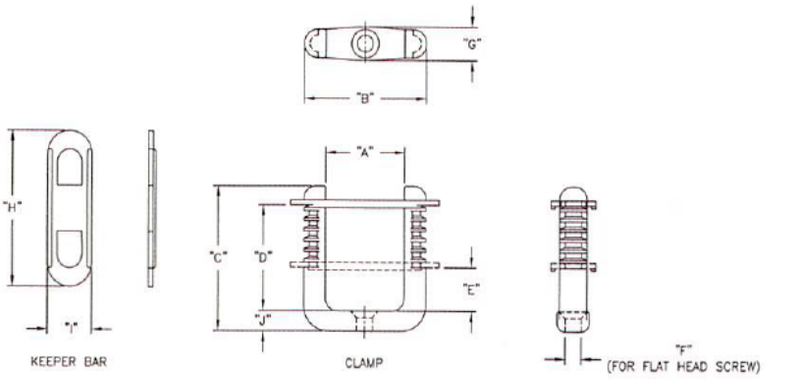

Features
- Mounts with a #8 or M4 flat-head machine screw or bolt
- Adjustable holding capacity
- Keeper bar is included separately and is removable for changes or repairs

Material: Nylon 6/6, RMS-01* • Color: Natural										
Standard Pack: 100 per bag										
Part No.	**"A" Ref.**	**"B" Ref.**	**"C" Ref.**	**"D" Ref.**	**"E" Ref.**	**"F" Ref.**	**"G" Ref.**	**"H" Ref.**	**"I" Ref.**	**"J" Ref.**
D-1	.990 (25.1)	1.530 (38.9)	1.72 (43.7)	1.25 (31.8)	.50 (12.7)	.200 (5.1)	.40 (10.2)	1.86 (47.2)	.56 (14.2)	.24 (6)
D-1.5	1.457 (37)	2.175 (55.3)	2.23 (56.6)	1.65 (41.9)	.66 (16.8)		.46 (11.7)	2.47 (62.7)	.70 (17.8)	.31 (7.9)
*UL94 V0 Nylon, RMS-19 available by special order. To order, add -19 to end of part no.										

HMCC
Hinged Locking Clamp

NEW

Fig. 1

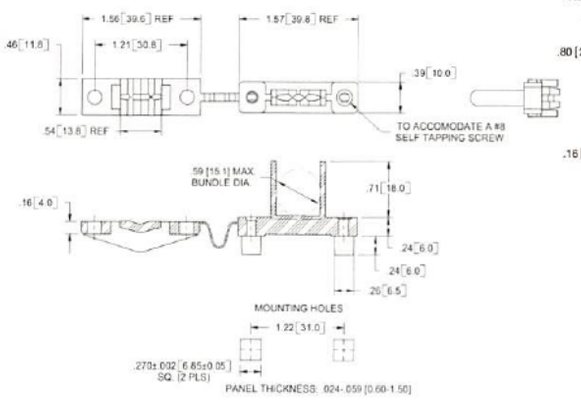

Fig. 2

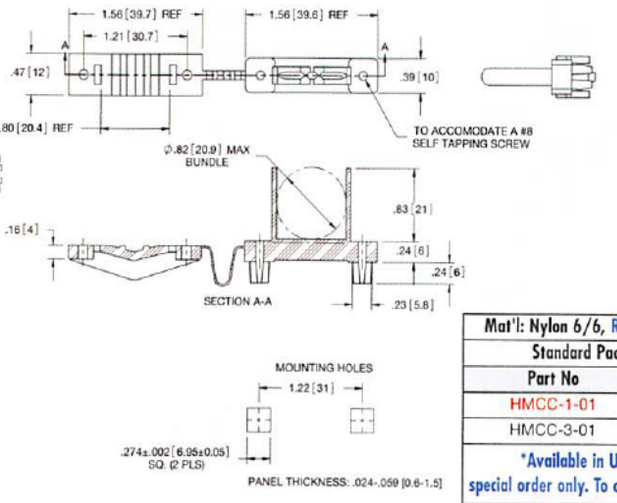

Mat'l: Nylon 6/6, RMS-01* Color: Natural	
Standard Pack: 1,000 per bag	
Part No	**Fig**
HMCC-1-01	1
HMCC-3-01	2
*Available in UL94 V0 material by special order only. To order, replace -01 with -19.	
Available by special order only. 5,000 piece minimum.	

Features
- Cables are installed into the clamp and held tightly in place by screws

539-4060 Sam
Get quote
Angic Global Solutions 1-888-872-0690
https://www.AngicGlobal.com Sales@AngicGlobal.com

KLH/TLH/TLHE

Screw Mount Twist Locks

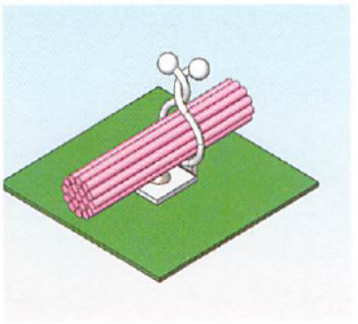

Features

- Wires can be routed in any direction
- Simply twist to open and close for wiring changes and repairs

• UL #E71558

Fig. 1

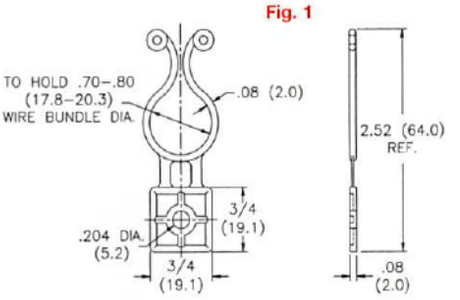

NOTE:
Mounts with a #8 or M4 screw or rivet

• UL #E71558

Fig. 2

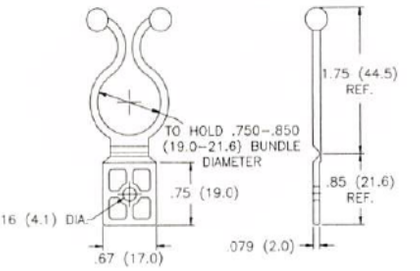

NOTE:
Mounts with a #6 or M3 screw or rivet

Fig. 3

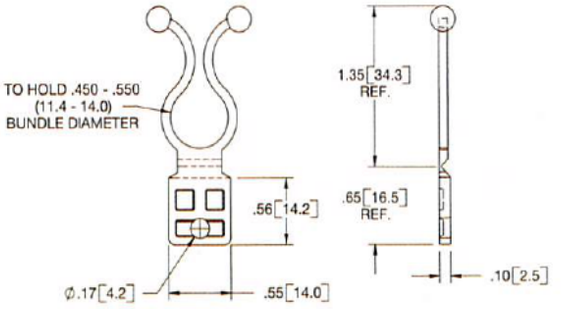

NOTE:
Mounts with a #8 or M4 screw or rivet

Fig. 4

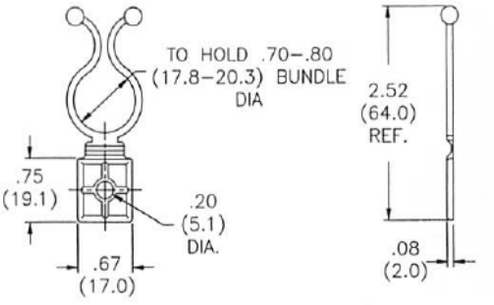

NOTE:
Mounts with a #8 or M4 screw or rivet

Mat'l: Nylon 6/6, RMS-01* Color: Natural	
Standard Pack: 1,000 per bag	
Part No.	Fig.
KLH-750-01	1
TLH-800-01	2
TLH-500-01	3
TLHE-1-750-01	4
*UL94 V0 Nylon, RMS-19 available by special order. To order, replace -01 with -19.	

WTLH

Webbed Twist Lock, Hinged

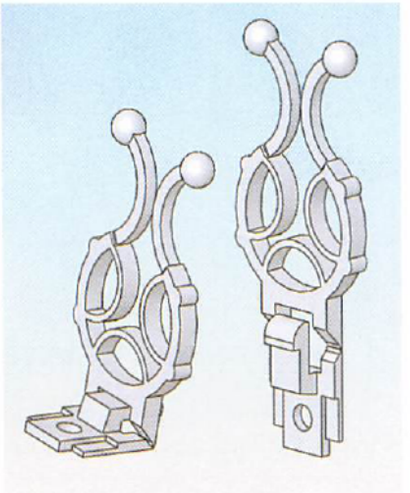

Features

- Base and webbed twist lock snap lock into place at a 90° angle
- Web design provides constant and self-centering grip of bundle

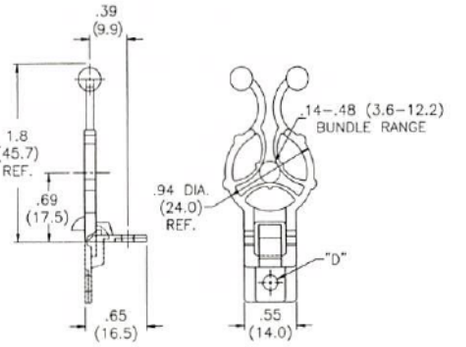

Material: Nylon 6/6, RMS-01* Color: Natural		
Part No.	Standard Pack: 500 per bag	
	Hole Dia. "D"	Recommended Screw Size
WTLH90-300-4-01	.13 (3.3)	#4 or M3
WTLH90-300-6-01	.15 (3.8)	#6 or M3
WTLH90-300-M4-01	.17 (4.3)	#8 or M4
*UL94 V0 Nylon, RMS-19 available by special order. To order, replace -01 with -19.		

-800-621-1892
Get quote
Angic Global Solutions 1-888-872-0690
https://www.AngicGlobal.com Sales@AngicGlobal.com

SHC
Snap-It Hose Clamp

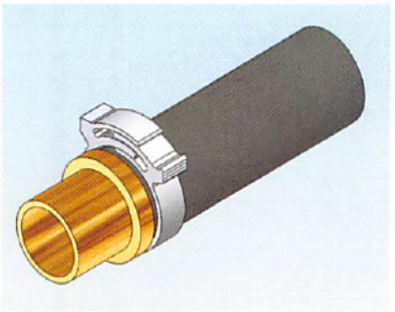

Patent No. 4,128,9128

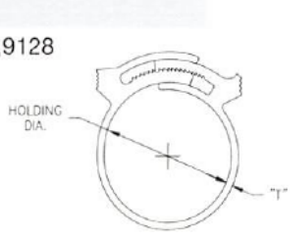

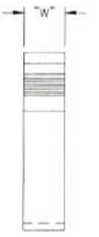

Features

- Can be installed in seconds using a standard pair of pliers, and sometimes only two fingers
- Safe, adjustable, and easily removable

Material: Nylon 6/6, RMS-73** Color: White, Black by special order. To order, add -BK to end of part no.			
Part No.	Standard Pack: 100 per bag		
	Holding Dia. Range	Thickness "T"	Width"W"
SHC-16GF*	1/4 - 5/16 (6.4 - 7.9)	.04 (1)	.13 (3.3)
SHC-23	23/64 - 25/64 (9.1 - 9.9)	.07 (1.8)	.22 (5.6)
SHC-26	25/64 - 15/32 (9.9 - 11.9)		
SHC-30	15/32 - 17/32 (11.9 - 13.5)		
SHC-32	17/32 - 19/32 (13.5 - 15.1)		
SHC-38	19/32 - 21/32 (15.1 - 16.7)		
SHC-44	11/16 - 13/16 (17.5 - 20.6)		
SHC-50	3/4 - 7/8 (19.1 - 22.2)		
SHC-56	7/8 - 1 (22.2 - 25.4)		
SHC-62	61/64 - 1-3/32 (24.2 - 27.8)		.31 (7.9)
SHC-68	1-1/32 - 1-3/16 (26.2 - 30.2)		
SHC-80	1-1/4 - 1-7/16 (31.8 - 36.5)		
SHC-92	1-13/32 - 1-5/8 (35.7 - 41.3)		.36 (9.1)
SHC-104	1-19/32 - 1-13/16 (40.5 - 46)		
SHC-114	1-45/64 - 2-1/32 (43.3 - 51.6)		
SHC-124	1-7/8 - 2-1/8 (47.6 - 54)		.40 (10.2)
SHC-134	2-1/8 - 2-3/8 (54 - 60.3)		
**Glass filled Nylon, RMS-35 available by special order on all sizes except SHC-16. To order add -GF to end of part no.			
*SHC-16 GF available only in the Glass-filled Nylon, RMS-35 as standard.			
Custom sizes available by special order.			

SCH/SCHS
Standing Capacitor Holder

SCH-1

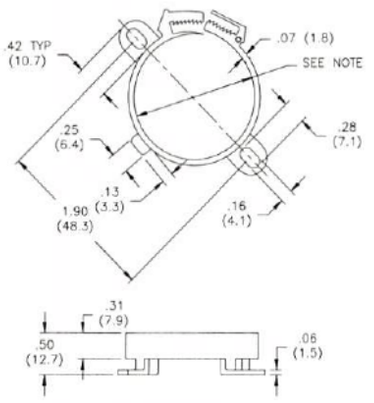

SCH-2/SCHS-2

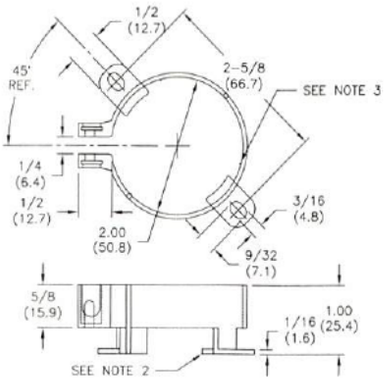

SCH-1
Notes

Adjustable holding dia.
Min. - 1-21/64 (33.7) with all teeth engaged
Max. - 1-7/16 (36.5) with 3 teeth engaged

Material: Nylon 6/6, RMS-01 Color: Natural
Standard Pack: 100 per Bag

SCH-2/SCHS-2
Notes:

Optional:
1. Clamping hardware; Screw, Quick Nut
2. Spacer to elevate capacitor 3/32 (2.4) from chassis
3. Anti-rotation rib (3 locations)

Material: Glass Filled Nylon, RMS-35 Color: Black	
Part No.	Standard Pack: 100 per bag Description
SCHS-2	w/spacer, w/o hardware (Note 1)
SCH-2	w/o spacer, w/o hardware
SCHS-2-H	w/spacer, w/clamping hardware
SCH-2-H	w/o spacer, w/clamping hardware

DTL
Dual End Twist Lock

• UL #E71558

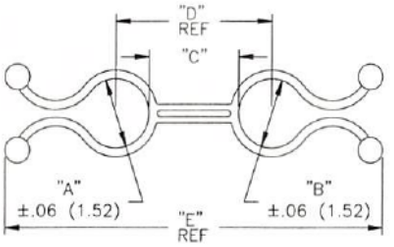

Features

- Routes and separates two bundles

Material: Nylon 6/6, RMS-01* Color: Natural				
Part No.	"A" and "B" Bundle Dia Range	"C"	"D" Ref	"E" Ref
DTL2525-4-01	.20-.30 (5.1-7.6)	1/4 (6.4)	1/2 (12.7)	1.92 (48.8)
DTL2525-12-01		3/4 (19.1)	1 (25.4)	2.42 (61.5)
DTL2525-20-01		1-1/4 (31.8)	1-1/2 (38.1)	2.92 (74.2)
DTL2525-28-01		1-3/4 (44.5)	2 (50.8)	3.42 (86.9)
DTL3535-4-01	.30-.40 (7.6-10.2)	1/4 (6.4	.60 (15.2)	2.18 (55.4)
DTL3535-12-01		3/4 (19.1)	1.10 (27.9)	2.68 (68.1)
DTL3535-20-01		1-1/4 (31.8)	1.60 (40.6)	3.18 (80.8)
DTL3535-28-01		1-3/4 (44.5)	2.10 (53.30)	3.68 (93.5)
DTL7575-4-01	.70-.80 (17.8-20.3)	1/4 (6.4)	1 (25.4)	3.10 (78.7)
DTL7575-12-01		3/4 (19.1)	1-1/2 (38.1)	3.60 (91.4)
DTL7575-20-01		1-1/4 (31.8)	2 (50.8)	4.10 (104.1)
DTL7575-28-01		1-3/4 (44.5)	2-1/2 (63.50)	4.60 (116.8)
*UL94 V0 material by special order. To order, replace -01 with -19.				
Other bundle diameters are available by special order.				

39-4060 Samp
Get quote
Angic Global Solutions 1-888-872-0690
https://www.AngicGlobal.com Sales@AngicGlobal.com

TL
Twist Lock

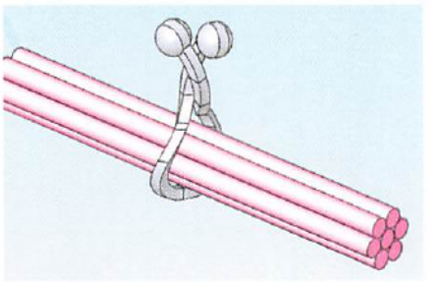

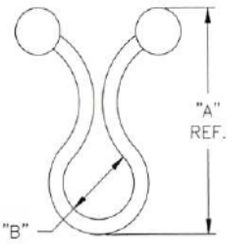

• UL #E71558

Part No.	Material: Nylon 6/6, RMS-01* Color: Natural Standard Pack: 1,000 per bag "A" Ref. Approximate Overall Height	"B" Ref. Wire Bundle
TL-250	.90 (22.9)	.20 (5.1) - .30 (7.6)
TL-350	1.03 (26.2)	.30 (7.6) - .40 (10.2)
TL-450	1.20 (30.5)	.40 (10.2) - .50 (12.7)
TL-600	1.33 (33.8)	.55 (14) - .65 (16.5)
TL-750	1.55 (39.4)	.70 (17.8) - .80 (20.3)
TL-950	1.70 (43.2)	MAX 1.00 (25.4)
TL-1125	2.19 (55.6)	MAX 1 - 3/16 (30.2)
TL-1375	2.68 (68.1)	MAX 1 - 7/16 (36.5)
TL-1500	2.93 (74.4)	MAX 1 - 9/16 (39.7)
TL-1750	3.45 (87.6)	MAX 1 - 13/16 (46)
Other colors available by special order		
*UL94 V0 Nylon, RMS-19 available by special order. To order, add -19 to the end of the part no.		

Features
- Simply twist to secure wire bundles
- To remove or add to the bundle, simply un-twist

KL
Kurly Lock

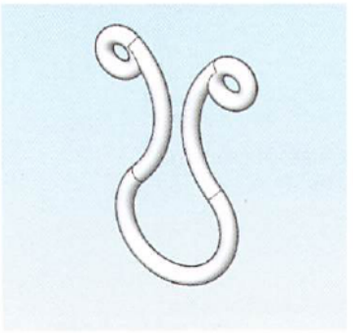

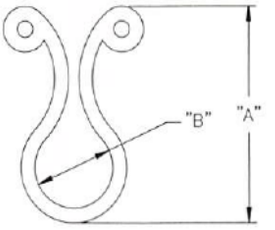

NOTE:
Hold up to 20 lbs (9 kg) tensile strength

• UL #E71558

Part No.	Material: Nylon 6/6, RMS-01* Color: Natural Standard Pack: 1,000 per bag "A" Approximate Height	"B" Wire Bundle Dia. ± 1/16 (1.6)
KL-125	.48 (12.2)	.13 - .15 (3.2 - 3.8)
KL-200	.82 (20.8)	.16 - .24 (4.1 - 6.1)
KL-250	.91 (23)	.20 - .30 (5.1 - 7.6)
KL-350	1.03 (26.2)	.30 - .40 (7.6 - 10.2)
KL-450	1.20 (30.5)	.40 - .50 (10.2 - 12.7)
KL-600	1.25 (31.8)	.55 - .65 (14 - 16.5)
KL-750	1.52 (38.6)	.70 - .80 (17.8 - 20.3)
KL-950	1.75 (44.5)	.90 - 1.00 (22.9 - 25.4)
Other colors available by special order.		
*UL94 V0 Nylon, RMS-19 available by special order. To order, add -19 to the end of the part no.		

Features
- Rounded edges prevent abrasion

WTL
Webbed Twist Lock

• UL #E71558

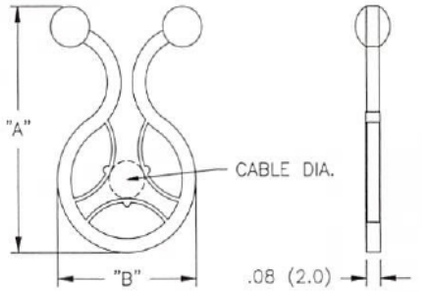

Features
- Webbed design provides self-centering and insulating grip of bundle

Part No.	Material: Nylon 6/6, RMS-01* Color: Natural Standard Pack: 1,000 per bag "A" Ref.	"B" Ref.	Cable Dia
WTL-600	1.30 (33)	.77 (19.6)	.20 (5.1)
WTL-750	1.54 (39.1)	.91 (23.1)	.22 (5.6)
*UL94 V0 Nylon, RMS-19 available by special order. To order, add -19 to the end of the part no.			
Available by special order only. 5,000 piece minimum.			

TL-F1
Twist Lock with Marker Tag

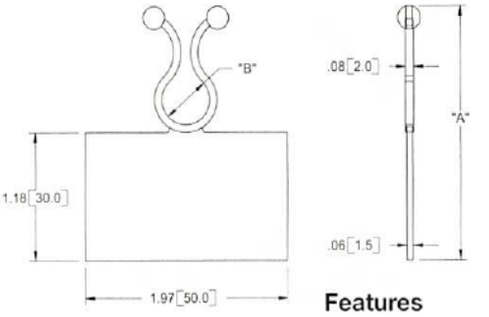

Features
- Use of markers or stickers on the flag area allows for identification of bundles

Part No.	Mat'l: Nylon 6/6, RMS-01* Color: Natural Standard Pack: 1,000 per bag "A" Ref.	"B" Ref. Approx. Bundle Dia.
TL-F1-250-01	2.18 (55.4)	.27 (7)
TL-F1-450-01	2.36 (60)	.46 (11.8)
*UL94 V0 Nylon, RMS-19 available by special order. To order, replace -01 with -19.		

-800-621-1892
ANGIC
Get quote
Angic Global Solutions 1-888-872-0690
https://www.AngicGlobal.com Sales@AngicGlobal.com

STL
Stand-Off Twist Lock

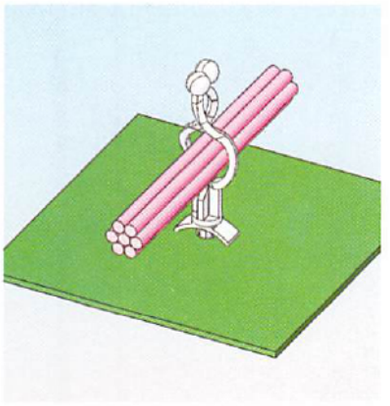

Features

- Lifts wires off the board to avoid hot components or to save space on crowded boards

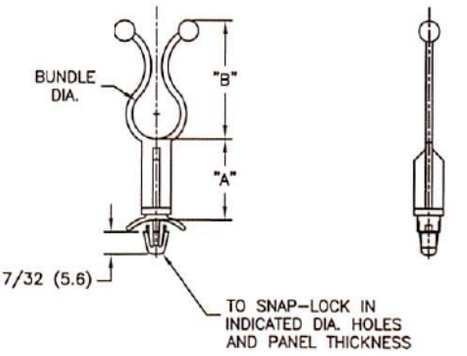

• UL #E71558

STL

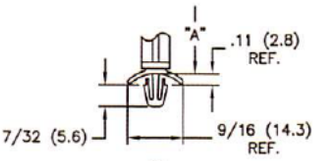

TO SNAP–LOCK IN A .187±.003 (4.75±0.08) DIA. HOLE, IN A .031 TO .078 (0.8 TO 2.0) PANEL THICKNESS

STL-1

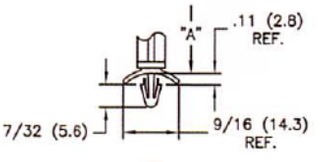

TO SNAP–LOCK IN A .156±.003 (4.0±0.08) DIA. HOLE, IN A .031 TO .078 (0.8 TO 2.0) PANEL THICKNESS

STL-3

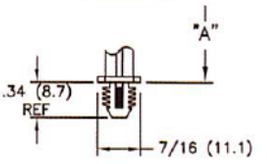

TO PRESS–FIT IN A .312±.003 (7.9±0.08) DIA. HOLE IN A .25 (6.4) MINIMUM PANEL THICKNESS

STL-6

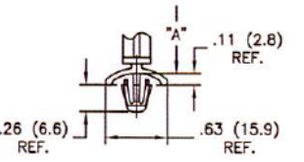

TO SNAP–LOCK IN A .236±.003 (6.00±0.08) DIA. HOLE IN A .032–.078 (0.78–2.00) PANEL THICKNESS

Material: Nylon 6/6, RMS-01* Color: Natural						
Part No.				Standard Pack: 1,000 per bag		
				"A"	"B" Ref.	Bundle Dia.
STL-250-3-01	STL-1-250-3-01	STL-3-250-3-01	STL-6-250-3-01	3/16 (4.8)	.75 (19.1)	.20 - .30 (5.1 - 7.6)
STL-250-8-01	STL-1-250-8-01	STL-3-250-8-01	STL-6-250-8-01	1/2 (12.7)		
STL-250-12-01	STL-1-250-12-01	STL-3-250-12-01	STL-6-250-12-01	3/4 (19.1)		
STL-250-16-01	STL-1-250-16-01	STL-3-250-16-01	STL-6-250-16-01	1 (25.4)		
STL-250-20-01	STL-1-250-20-01	STL-3-250-20-01	STL-6-250-20-01	1-1/4 (31.8)		
STL-350-3-01	STL-1-350-3-01	STL-3-350-3-01	STL-6-350-3-01	3/16 (4.8)	.91 (23.1)	.30 - .40 (7.6 - 10.2)
STL-350-8-01	STL-1-350-8-01	STL-3-350-8-01	STL-6-350-8-01	1/2 (12.7)		
STL-350-12-01	STL-1-350-12-01	STL-3-350-12-01	STL-6-350-12-01	3/4 (19.1)		
STL-350-16-01	STL-1-350-16-01	STL-3-350-16-01	STL-6-350-16-01	1 (25.4)		
STL-350-20-01	STL-1-350-20-01	STL-3-350-20-01	STL-6-350-20-01	1-1/4 (31.8)		
STL-450-3-01	STL-1-450-3-01	STL-3-450-3-01	STL-6-450-3-01	3/16 (4.8)	1.09 (27.7)	.40 - .50 (10.2 - 12.7)
STL-450-8-01	STL-1-450-8-01	STL-3-450-8-01	STL-6-450-8-01	1/2 (12.7)		
STL-450-12-01	STL-1-450-12-01	STL-3-450-12-01	STL-6-450-12-01	3/4 (19.1)		
STL-450-16-01	STL-1-450-16-01	STL-3-450-16-01	STL-6-450-16-01	1 (25.4)		
STL-450-20-01	STL-1-450-20-01	STL-3-450-20-01	STL-6-450-20-01	1-1/4 (31.8)		
STL-600-3-01	STL-1-600-3-01	STL-3-600-3-01	STL-6-600-3-01	3/16 (4.8)	1.28 (32.5)	.50 - .60 (12.7 - 15.2)
STL-600-8-01	STL-1-600-8-01	STL-3-600-8-01	STL-6-600-8-01	1/2 (12.7)		
STL-600-12-01	STL-1-600-12-01	STL-3-600-12-01	STL-6-600-12-01	3/4 (19.1)		
STL-600-16-01	STL-1-600-16-01	STL-3-600-16-01	STL-6-600-16-01	1 (25.4)		
STL-600-20-01	STL-1-600-20-01	STL-3-600-20-01	STL-6-600-20-01	1-1/4 (31.8)		
STL-750-3-01	STL-1-750-3-01	STL-3-750-3-01	STL-6-750-3-01	3/16 (4.8)	1.45 (36.8)	.70 - .80 (17.8 - 20.3)
STL-750-8-01	STL-1-750-8-01	STL-3-750-8-01	STL-6-750-8-01	1/2 (12.7)		
STL-750-12-01	STL-1-750-12-01	STL-3-750-12-01	STL-6-750-12-01	3/4 (19.1)		
STL-750-16-01	STL-1-750-16-01	STL-3-750-16-01	STL-6-750-16-01	1 (25.4)		
STL-750-20-01	STL-1-750-20-01	STL-3-750-20-01	STL-6-750-20-01	1-1/4 (31.8)		
*UL94 V0 Nylon, RMS-19 available by special order. To order, replace -01 with -19.						
Available by special order only. 5,000 piece minimum.						

39-4060 Samp
Get quote
Angic Global Solutions 1-888-872-0690
https://www.AngicGlobal.com Sales@AngicGlobal.com

STL-J

Stand-Off Twist Lock - Metric

• UL #E71558

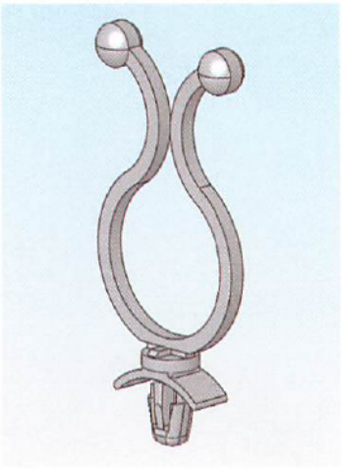

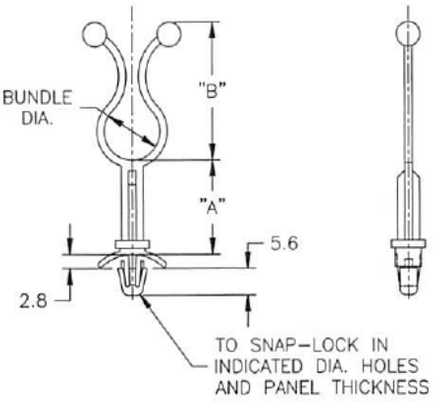

Features

- Simply twist to secure wire bundles
- To remove or add to the bundle, simply un-twist

STL-J

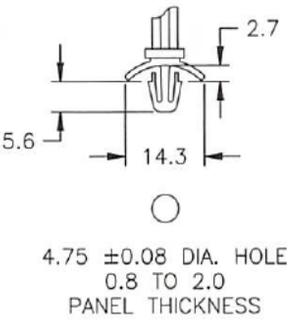

STL-J2

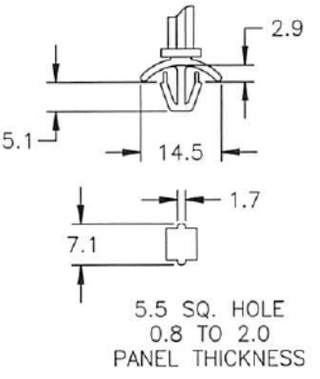

STL-J5

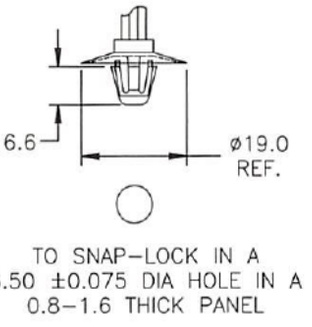

Material: Nylon 6/6, RMS-01* Color: Natural					
Part No.			Standard Pack: 1,000 per bag		
			"A"	"B" Ref.	Bundle Dia.
STL-J-250-4M-01	STL-J2-250-4M-01	STL-J5-250-4M-01	4	19.1	5.1 - 7.6
STL-J-250-6M-01	STL-J2-250-6M-01	STL-J5-250-6M-01	6		
STL-J-250-8M-01	STL-J2-250-8M-01	STL-J5-250-8M-01	8		
STL-J-250-10M-01	STL-J2-250-10M-01	STL-J5-250-10M-01	10		
STL-J-250-12M-01	STL-J2-250-12M-01	STL-J5-250-12M-01	12		
STL-J-350-4M-01	STL-J2-350-4M-01	STL-J5-350-4M-01	4	23.1	7.6 - 10.2
STL-J-350-6M-01	STL-J2-350-6M-01	STL-J5-350-6M-01	6		
STL-J-350-8M-01	STL-J2-350-8M-01	STL-J5-350-8M-01	8		
STL-J-350-10M-01	STL-J2-350-10M-01	STL-J5-350-10M-01	10		
STL-J-350-12M-01	STL-J2-350-12M-01	STL-J5-350-12M-01	12		
STL-J-450-4M-01	STL-J2-450-4M-01	STL-J5-450-4M-01	4	27.7	10.2 - 12.7
STL-J-450-6M-01	STL-J2-450-6M-01	STL-J5-450-6M-01	6		
STL-J-450-8M-01	STL-J2-450-8M-01	STL-J5-450-8M-01	8		
STL-J-450-10M-01	STL-J2-450-10M-01	STL-J5-450-10M-01	10		
STL-J-450-12M-01	STL-J2-450-12M-01	STL-J5-450-12M-01	12		
STL-J-600-4M-01	STL-J2-600-4M-01	STL-J5-600-4M-01	4	32.5	12.7 - 15.2
STL-J-600-6M-01	STL-J2-600-6M-01	STL-J5-600-6M-01	6		
STL-J-600-8M-01	STL-J2-600-8M-01	STL-J5-600-8M-01	8		
STL-J-600-10M-01	STL-J2-600-10M-01	STL-J5-600-10M-01	10		
STL-J-600-12M-01	STL-J2-600-12M-01	STL-J5-600-12M-01	12		
*UL94 V0 Nylon, RMS-19 available by special order. To order, replace -01 with -19.					
Available by special order only. 5,000 piece minimum.					
All dimensions in mm.					

-800-621-1892
Get quote
Angic Global Solutions 1-888-872-0690
https://www.AngicGlobal.com Sales@AngicGlobal.com

SHK/SHKE
Stand-Off Harness Clip

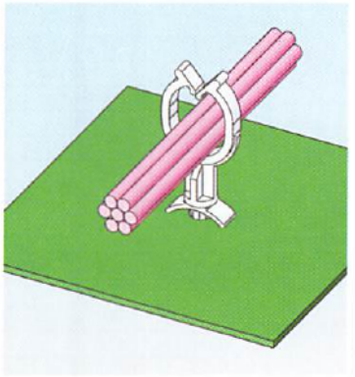

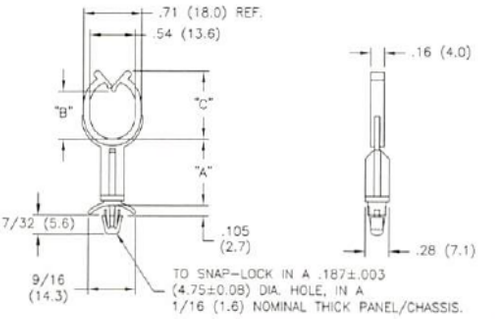

Features
- Wire bundles are easily installed and retained

Mat'l: Nylon 6/6, RMS-01* Color: Natural			
Standard Pack: 1,000 per bag			
Part No.	"A" ± .015 (0.4)	"B" Ref.	"C" Ref.
SHK-6-01	3/8 (9.5)	.54 (13.6)	.77 (19.5)
SHK-8-01	1/2 (12.7)		
SHK-12-01	3/4 (19.1)		
SHK-16-01	1 (25.4)		
SHK-20-01	1-1/4 (31.8)		
SHKE-6-01	3/8 (9.5)	.81 (20.6)	1.14 (29)
SHKE-8-01	1/2 (12.7)		
SHKE-12-01	3/4 (19.1)		
SHKE-16-01	1 (25.4)		
SHKE-20-01	1-1/4 (31.8)		
*UL94 V0 Nylon, RMS-19 available by special order. To order, replace -01 with -19.			

SHK-J
Stand-Off Harness Clip - Metric

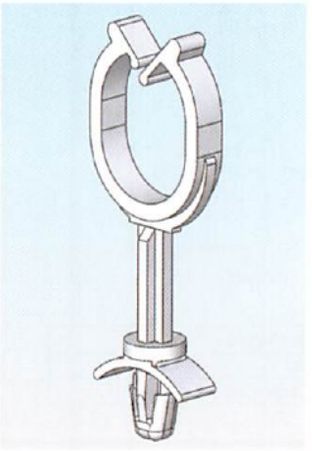

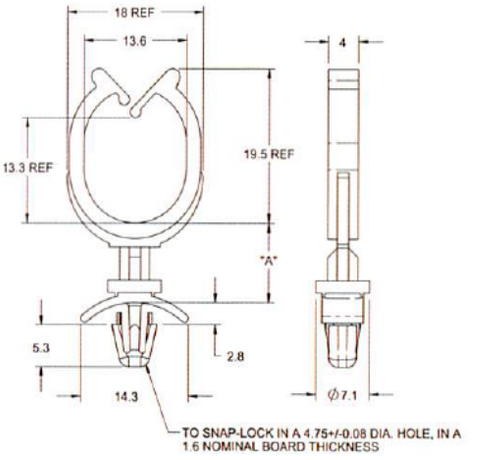

Material: Nylon 6/6, RMS-01* Color: Natural	
Part No.	Standard Pack: 1,000 per bag
	"A" ± 0.4
SHK-J-6M-01	6
SHK-J-8M-01	8
SHK-J-10M-01	10
SHK-J-12M-01	12
SHK-J-14M-01	14
SHK-J-16M-01	16
SHK-J-18M-01	18
SHK-J-20M-01	20
SHK-J-22M-01	22
SHK-J-24M-01	24
SHK-J-26M-01	26
SHK-J-28M-01	28
*UL94 V0 Nylon, RMS-19 available by special order. To order, replace -01 with -19.	
Available by special order only. 5,000 piece minimum.	
All dimensions in mm .	

SLCS
Stand-Off Locking Clip

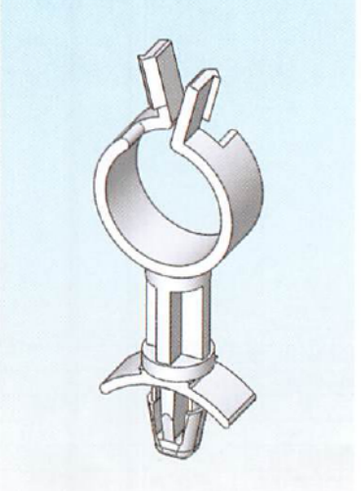

Features
- Once the wires are installed in the clamp, twist to retain

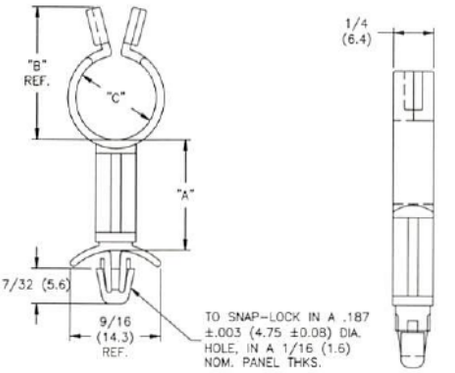

• UL #E71558

Part No. Order Code

SLCS – 500 – 8 – 01

Part No. | Size | "A" | Material

Material: Nylon 6/6, RMS-01* • Color: Natural		
Part No.	Standard Pack: 1,000 per bag	
	"B"	Max Bundle Dia. "C" Locked
SLCS-250-A-01	.53 (13.5)	3/16 (4.8)
SLCS-370-A-01	.66 (16.8)	5/16 (7.9)
SLCS-500-A-01	.79 (20.1)	7/16 (11.1)
SLCS-750-A-01	1.04 (26.4)	11/16 (17.5)
*UL94 V0, RMS-19 available by special order. To order, replace -01 with -19.		

"A"	"A" ± .015 (0.4)
-3	3/16 (4.8)
-4	1/4 (6.4)
-6	3/8 (9.5)
-8	1/2 (12.7)
-10	5/8 (15.9)
-16	1 (25.4)

39-4060 Samp
ANGIC
Get quote
Angic Global Solutions 1-888-872-0690
https://www.AngicGlobal.com Sales@AngicGlobal.com

SLCSE/SLCSE2
Stand-Off Lock Clip

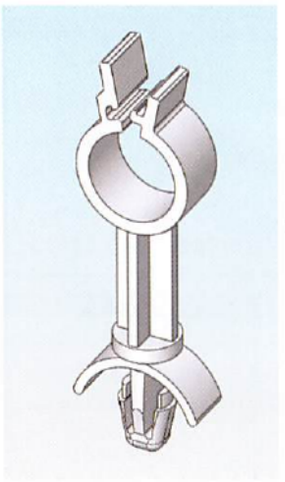

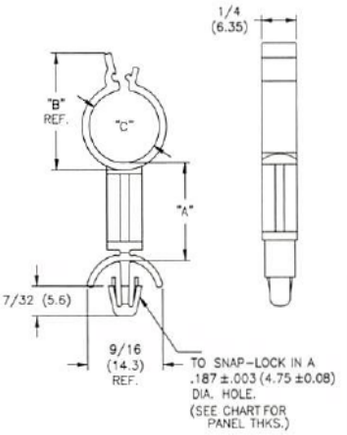

• UL #E71558

Part No. Order Code

SLCSE – 500 – 8 – 01

Part No. | Size | "A" | Material

"A"	"A" ± .015 (0.4)
-3	3/16 (4.8)
-4	1/4 (6.4)
-6	3/8 (9.5)
-8	1/2 (12.7)

Features

- Once the wires are installed in the clamp, snap the top together to retain them, twist to re-open

Mat'l: Nylon 6/6, RMS-01* Color: Natural			
Standard Pack: 1,000 per bag			
Part No.	**"B"**	**Panel Thickness Range**	**Max Bundle Dia. "C" Locked**
SLCSE-250-A-01	.57 (14.5)	.031-.078 (0.8-2)	.22 (5.6)
SLCSE-370-A-01	.71 (18)		.35 (8.9)
SLCSE-500-A-01	.83 (21.1)		.47 (11.9)
SLCSE-750-A-01	1.08 (27.4)		.73 (18.5)
SLCSE2-250-A-01	.57 (14.5)	.078-.160 (2-4)	.22 (5.6)
SLCSE2-370-A-01	.71 (18)		.35 (8.9)
SLCSE2-500-A-01	.83 (21.1)		.47 (11.9)
SLCSE2-750-A-01	1.08 (27.4)		.73 (18.5)
*UL94 V0 material by special order only. To order, replace -01 with -19.			
Available by special order only. 5,000 piece minimum.			

SKLO-550-01
Side Entry Kurly Lock

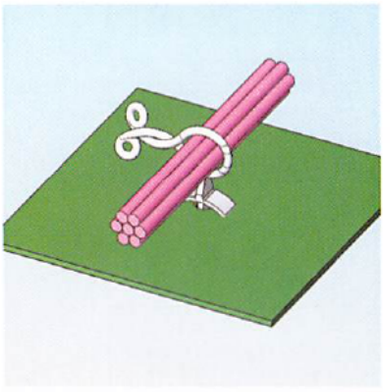

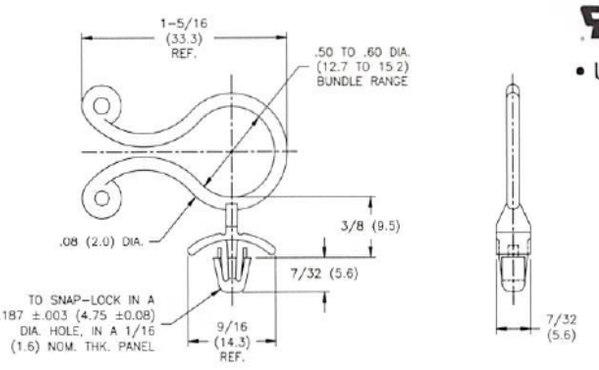

• UL #E71558

Features

- Locking ends are parallel to working surface

Material: Nylon 6/6, RMS-01* Color: Natural
Standard Pack: 1,000 per bag
*UL94 V0 Nylon, RMS-19 available by special order. To order, replace -01 with -19.

SKL
45° Kurly Lock

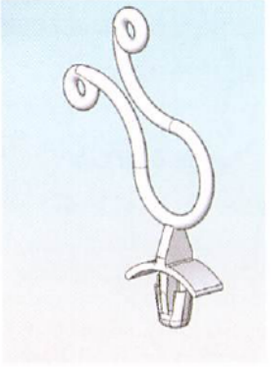

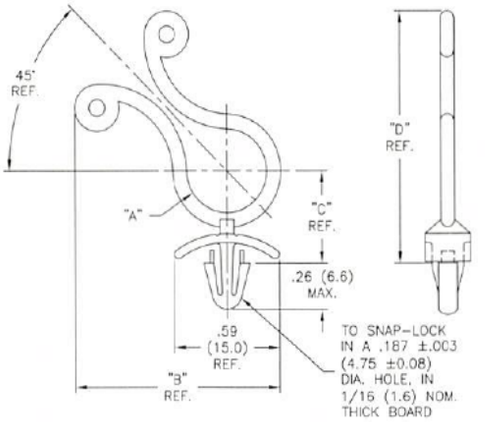

• UL #E71558

Material: Nylon 6/6, RMS-01*, Color: Natural				
Part No.	Standard Pack: 1,000 per bag			
	"A" Bundle Dia Range	"B"	"C" Ref.	"D" Ref.
SKL45-250	.15-.25 (3.8-6.4)	.98 (24.9)	.33 (8.4)	1.05 (26.7)
SKL45-350	.30-.40 (7.6- 10.2)	1.07 (27.2)	.43 (10.9)	1.20 (30.5)
SKL45-450	.40-.47 (10.2-11.9)	1.12 (28.4)	.47 (11.9)	1.30 (33)
*UL94 V0 Nylon, RMS-19 available by special order. To order, replace -01 with -19.				

1-800-621-1892
Get quote
Angic Global Solutions 1-888-872-0690
https://www.AngicGlobal.com Sales@AngicGlobal.com

BHKL
Blind Hole Kurly Lock

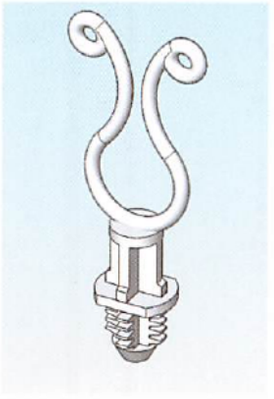

Features

- Flexible ribs lock into round, oval, threaded or drilled blind holes
- Ribs deflect when pressed into hole then spring back to lock in place
- Blunt tip allows maximum grip in blind holes with minimum protrusion in pass-through applications

• UL #E71558

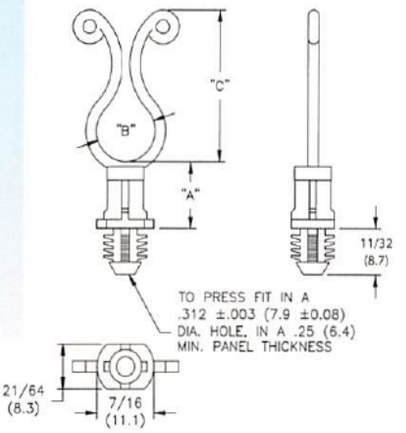

Material: Nylon 6/6, RMS-01* Color: Natural			
Part No.	Standard Pack: 1,000 per bag		
	"A"	"B" Bundle Dia. Range	"C" Ref
BHKL-350-4-01	1/4 (6.4)	.30 -.40 (7.6-10.2)	1 (25.4)
BHKL-350-10-01	5/8 (15.9)		
BHKL-450-4-01	1/4 (6.4)	.40-.50 (10.2-12.7)	1 - 1/8 (28.6)
BHKL-450-6-01	3/8 (9.5)		
BHKL-450-8-01	1/2 (12.7)		
BHKL-450-10-01	5/8 (15.9)		
BHKL-750-4-01	1/4 (6.4)	.70-.80 (17.8-20.3)	1 - 1/2 (38.1)
BHKL-750-6-01	3/8 (9.5)		
BHKL-750-8-01	1/2 (12.7)		
BHKL-750-10-01	5/8 (15.9)		
*UL94 V0 Nylon, RMS-19 available by special order. To order, replace -01 with -19.			

STL-8-450-2-01
Blind Hole Twist-Lock

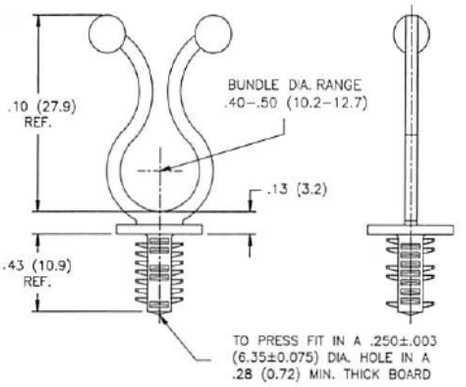

Material: Nylon 6/6, RMS-01* • Color: Natural
Standard Pack: 1,000 per bag
*UL94 V0 Nylon, RMS-19 available by special order. To order replace the -01 with -19.

TLJ-200-01
Twist Lock, Type "J"

• UL #E71558

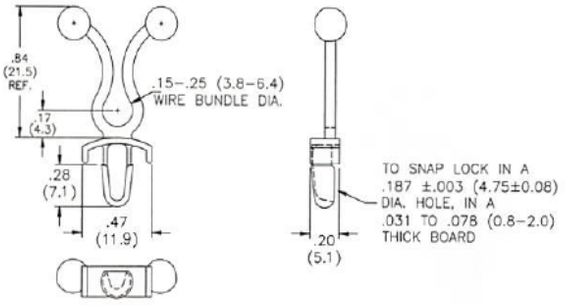

Material: Nylon 6/6, RMS-01* Color: Natural
Standard Pack: 500 per bag
*UL94 V0 Nylon, RMS-19 available by special order. To order, replace -01 with -19.

STL-J9
Quarter Turn Stand-Off Twist Lock

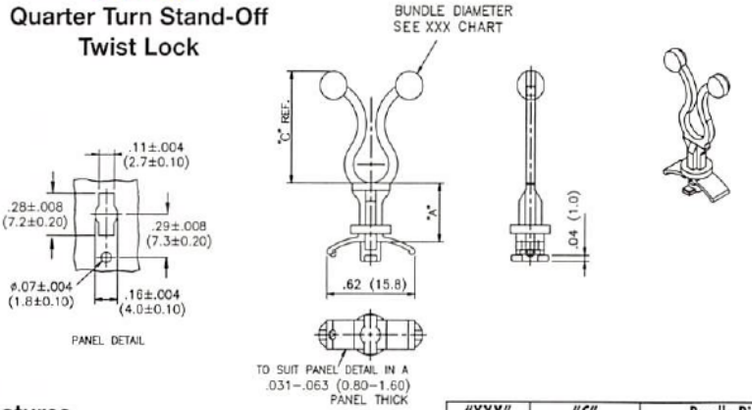

Features

- Easily inserted and removed by turning 90°
- Low protrusion base, only .04 (1) below chassis
- Supports the European WEEE initiative

"XXX"	"C"	Bundle Dia.
-250	.75 (19.1)	.20-30 (5.1-7.6)
-350	.91 (23.1)	.30-.40 (7.6-10.2)
-450	1.09 (27.7)	.40-.50 (10.2-12.7)
-600	1.28 (32.5)	.50-.60 (12.7-15.2)
Part No. example STL-J9-250-4M-01		

Material: Nylon 6/6, RMS-01* • Color: Natural	
Part No. XXX = Bundle Diameter	Standard Pack: 1,000 "A"
STL-J9-XXX-4M-01	.16 (4)
STL-J9-XXX-6M-01	.24 (6)
STL-J9-XXX-8M-01	.32 (8)
STL-J9-XXX-10M-01	.39 (10)
STL-J9-XXX-12M-01	.47 (12)
STL-J9-XXX-14M-01	.55 (14)
STL-J9-XXX-16M-01	.63 (16)
STL-J9-XXX-18M-01	.71 (18)
STL-J9-XXX-20M-01	.79 (20)
STL-J9-XXX-22M-01	.87 (22)
STL-J9-XXX-24M-01	.95 (24)
STL-J9-XXX-26M-01	1.02 (26)
*UL94 V0 Nylon, RMS-19 available by special order. To order, replace -01 with -19.	
Available by special order only. 5,000 piece minimum.	

39-4060 Samp
Get quote
Angic Global Solutions 1-888-872-0690
https://www.AngicGlobal.com Sales@AngicGlobal.com

WSTL-SME-16.5-01
Webbed Twist Lock, Panel Mount

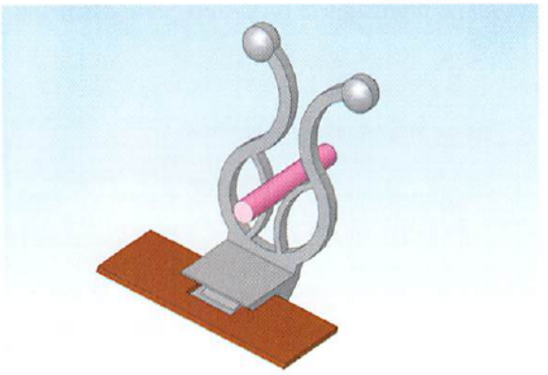

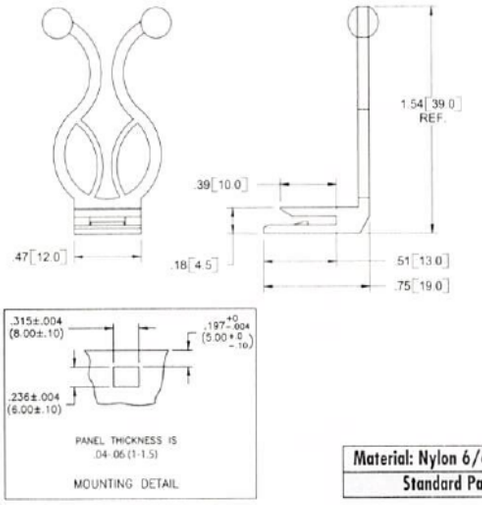

Material: Nylon 6/6, RMS-01 Color: Natural
Standard Pack: 1,000 per bag

TLHS90-300-01
Hinged Twist Lock with Stand-Off

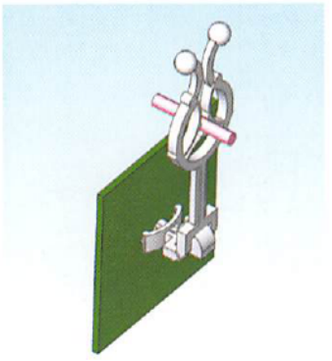

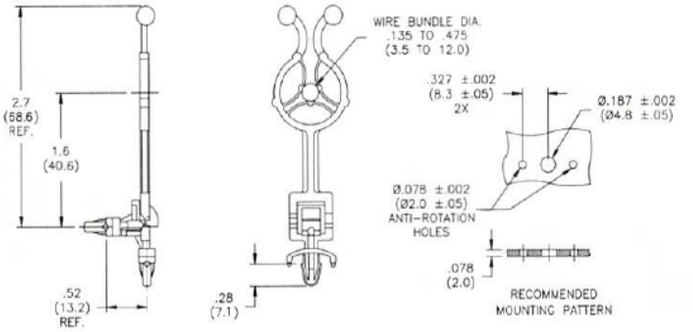

• UL #E71558

Material: Nylon 6/6, RMS-01* Color: Natural
Standard Pack: 500 per bag
*UL94 V0 Nylon, RMS-19 available by special order. To order, replace -01 with -19.

Features
- Base and webbed twist lock snap lock at 90° angle

BHLWHC
Blind Hole Mounted Clip

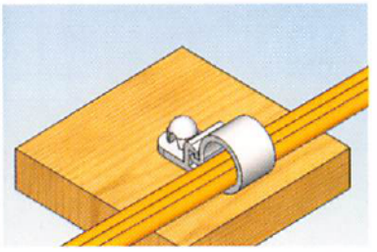

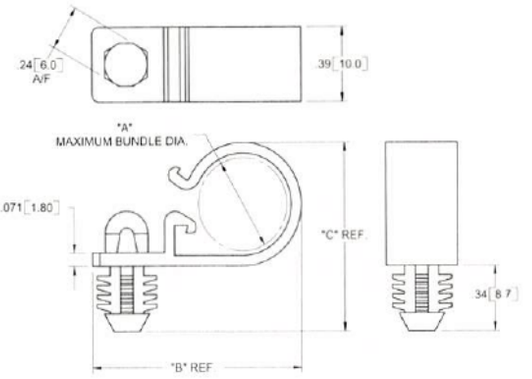

Features
- Easily pushed into mounting hole using a standard 6mm hexagonal socket pressed onto the mounting head

Mat'l: Nylon 6/6, RMS-01* Color: Natural					
Standard Pack: 1,000 per bag					
Part No.	**Max Bundle Dia**	**Mounting Hole Dia.**	**Dim. "B"**	**Dim. "C"**	**Panel Thickness**
BHLWHC-500-01	.50 (12.7)	.312 ± .002 (7.92 ± 0.05)	1.15 (29.3)	1.00 (25.4)	.250 (6.35) Min.
BHLWHC-750-01	.75 (19.1)		1.44 (36.5)	1.34 (34.1)	
*UL94 V0 Nylon, RMS-19 available by special order. To order, replace -01 with -19.					

-800-621-1892
Get quote
Angic Global Solutions 1-888-872-0690
https://www.AngicGlobal.com Sales@AngicGlobal.com

PAKKL
Plug In Adjustable Clip

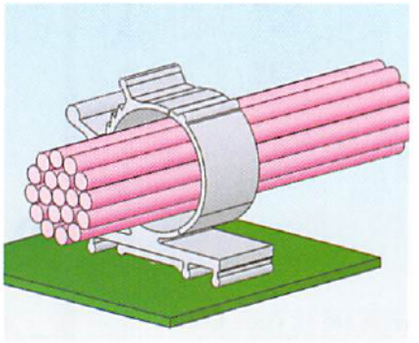

NEW

Fig. 1

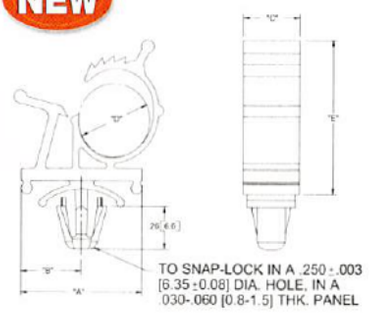

Fig. 2

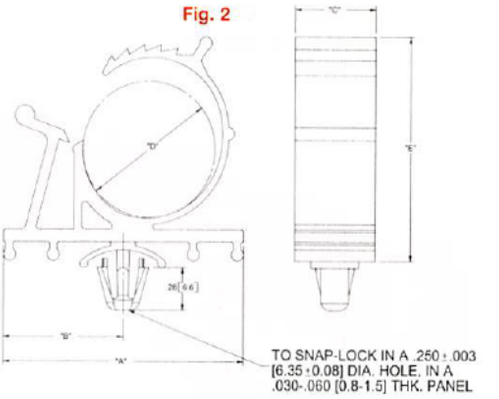

Part No.		Color: Natural Standard Pack: 100 per bag					
Material: Nylon 6/6, RMS-01	Material: UL94 V0 Nylon 6/6, RMS-19	"A" ± .015 (0.4)	"B" ± .015 (0.4)	"C" ± .015 (0.4)	"D" Holding Dia Ref	"E" Ref.	Fig.
PAKKL-3140-01	PAKKL-3140-19	.75 (19.1)	.38 (9.7)	.35 (8.9)	.310-.400 (7.9-10.2)	.94 (23.8)	1
PAKKL-4756-01	PAKKL-4756-19	1.24 (31.5)	.62 (15.7)	.40 (10.2)	.469-.563 (11.9-14.3)	1.17 (29.8)	
PAKKL-5775-01	PAKKL-5775-19	1.50 (38.1)	.75 (19.1)	.50 (12.7)	.578-.750 (14.7-19.1)	1.36 (34.5)	2

PKKL
Plug In Locking Clip

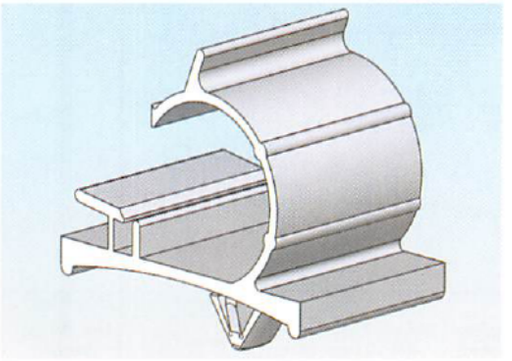

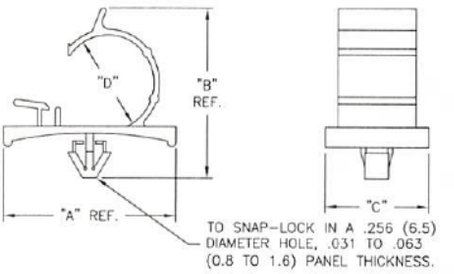

Material: Nylon 6/6, RMS-74 Color: Natural					
Part No.	"A" Ref.	"B" Ref.	"C"	"D" Holding Dia.	Standard Pack
PKKL-3	1.02 (26)	.94 (23.9)	.67 (17)	.37 (9.4)	200
PKKL-3S	.83 (21)	.84 (21.3)	.75 (19.2)	.31 (7.9)	
PKKL-4	1.19 (30.3)	1.26 (32)	.76 (19.4)	.53 (13.5)	100

HURC/DHURC
Plug In Routing Clips

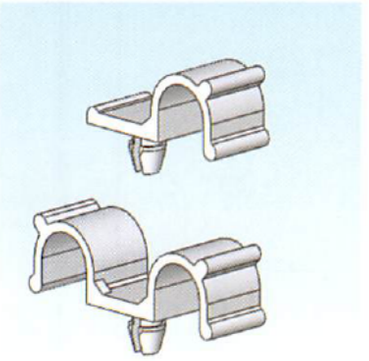

Fig. 1

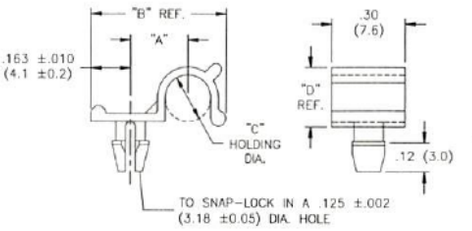

Fig. 2

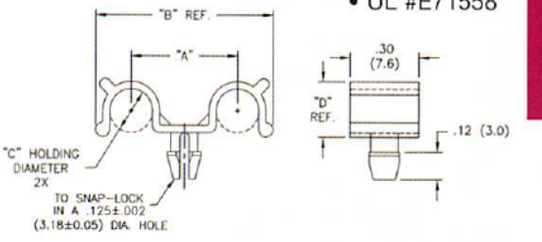

• UL #E71558

Mat'l: Nylon 6/6, RMS-01* Color: Natural Standard Pack: 1,000 per bag						
Part No.	"C" Holding Dia.	"A"	"B" Ref.	"D" Ref.	Panel Thk	Fig.
HURC-2-01	1/8 (19.0)	.20 (5.1)	.59 (15.0)	.17 (.43)	.062 (1.6)	1
HURC-3-01	3/16 (4.8)	.24 (6.1)	.65 (15.6)	.24(6.1)		
HURC-4-01	1/4 (6.4)	.27 (6.9)	.72 (18.3)	.30(7.6)		
HURC1-2-01	1/8 (19.0)	.20 (5.1)	.59 (15.0)	.17 (.43)	.093 (1.6)	
HURC1-3-01	3/16 (4.8)	.24 (6.1)	.65 (15.6)	.24(6.1)		
HURC1-4-01	1/4 (6.4)	.27 (6.9)	.72 (18.3)	.30(7.6)		
DHURC-2-01	1/8 (19.0)	.41 (10.4)	.59 (15.0)	.17 (.43)	.062 (1.6)	2
DHURC-3-01	3/16 (4.8)	.48 (12.2)	.65 (15.6)	.24(6.1)		
DHURC-4-01	1/4 (6.4)	.55 (14)	.72 (18.3)	.30(7.6)		
*Available in UL94 V0 material by special order only. To order, replace -01 with -19.						

Get quote
Angic Global Solutions 1-888-872-0690
https://www.AngicGlobal.com Sales@AngicGlobal.com

SRC
Split Routing Clip

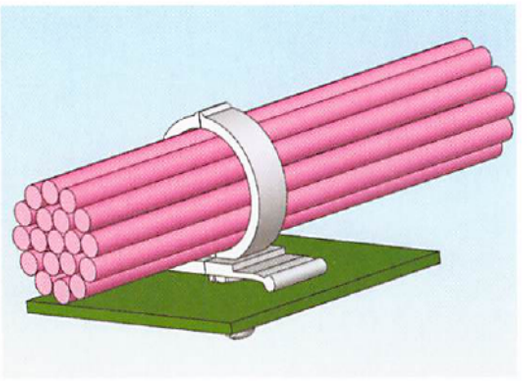

Fig. 1

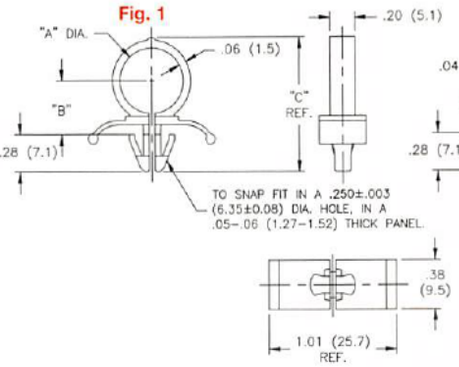

Fig. 2

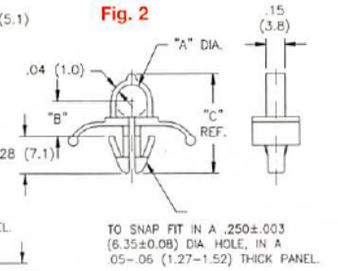

• UL #E71558

Features
- Wraps around cables locking them in place

Material: Nylon 6/6, RMS-01* • Color: Natural				
Part No.	Standard Pack: 1,000 per bag			
	"A"	"B" ± .015 (0.4)	"C" Ref.	Fig.
SRC-4-01	1/4 (6.4)	.26 (6.6)	.75 (19.1)	2
SRC-7-01	7/16 (11.1)	.39 (9.9)	.97 (24.6)	1
SRC-8-01	1/2 (12.7)	.43 (10.8)	1.04 (26.5)	
SRC-10-01	5/8 (15.9)	.50 (12.7)	1.18 (30)	
*UL94 V0 Nylon, RMS-19 available by special order. To order, replace -01 with -19.				

CH
Plug In Cable Hanger

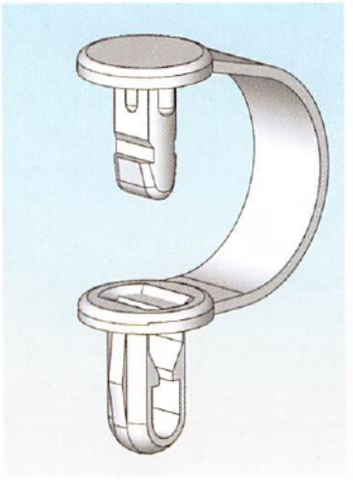

Features
- One piece, self mounting clamp
- Quickly and permanently installs by hand

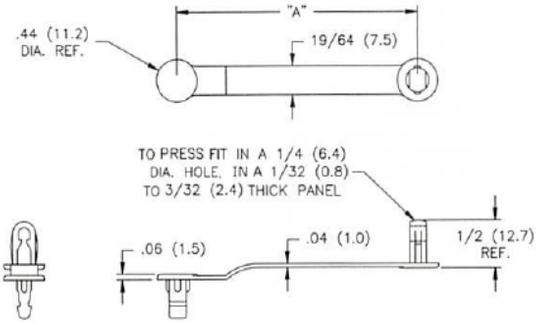

Part No.				Standard Pack: 1,000 per bag	
Material: Nylon 6/6, RMS-01 Color: Natural	Material: Nylon 6/6, RMS-01 Color: Black	Material: Polypropylene, RMS-10 Color: Natural	Material: Polypropylene, RMS-10 Color: Black	Nominal "A"	Max. Holding Diameter
CH-1-01	CH-1-01BK	CH-1-10	CH-1-10BK	1 - 3/4 (44.5)	3/8 (9.5)
CH-2-01	CH-2-01BK	CH-2-10	CH-2-10BK	2 - 5/8 (66.7)	5/8 (15.9)
CH-3-01	CH-3-01BK	CH-3-10	CH-3-10BK	3 - 3/4 (95.3)	1 (25.4)

RSC
Plug In Cable Hanger

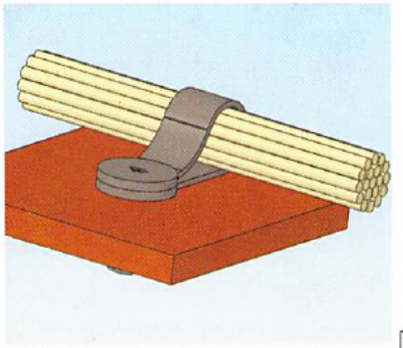

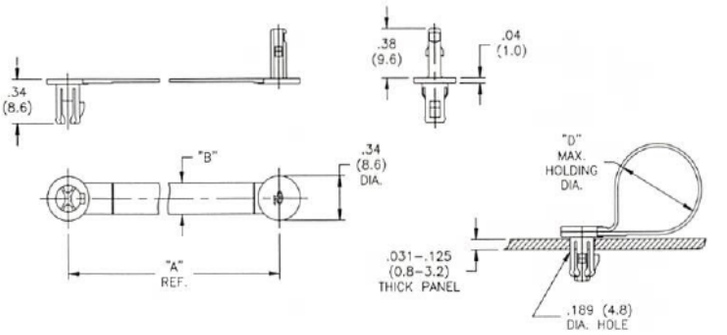

Material: Nylon 6/6, RMS-01 Color: Black			
Part No.	Standard Pack: 1,000 per bag		
	"A"	"B"	"D" Max Holding Dia.
RSC-3-01	1.10 (27.9)	.16 (4.1)	7/32 (5.6)
RSC-4-01	1.30 (33)	.24 (6.1)	1/4 (6.4)
RSC-6-01	1.69 (42.9)		3/8 (9.5)
RSC-9-01	2.48 (63)		5/8 (15.9)

800-621-1892
ANGIC
Get quote
Angic Global Solutions 1-888-872-0690
https://www.AngicGlobal.com Sales@AngicGlobal.com

RWS
Round Wire Saddle

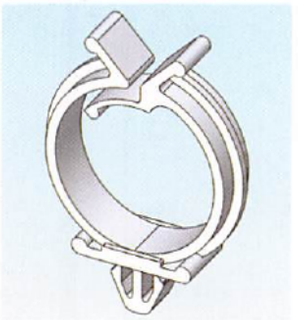

Features
- Design allows cables to be inserted into the clamp and held securely

RWS-10

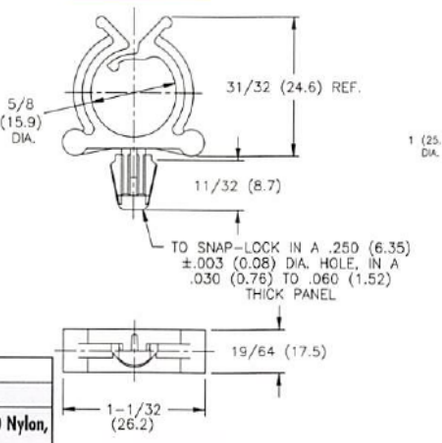

ROUND HOLE MOUNT

RWS-16

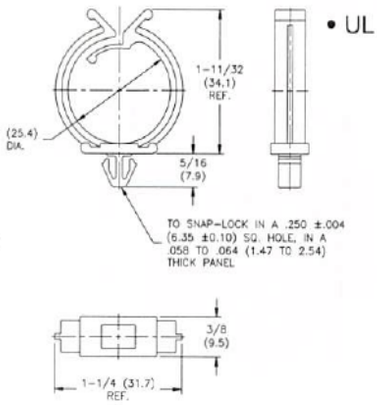

SQUARE HOLE MOUNT

• UL #E71558

Standard Pack: 1,000 per bag		
Part No.		
Material: Nylon 6/6, RMS-01 Color: Natural	Material: Nylon 6/6, RMS-01 Color:Black	Material: UL94 V0 Nylon, RMS-19 Color: Natural
RWS-10-01	RWS-10-01BK	RWS-10-19
RWS-16-01	RWS-16-01BK	RWS-16-19

WSLTRA
Wire Saddle with Releasable Arrowhead

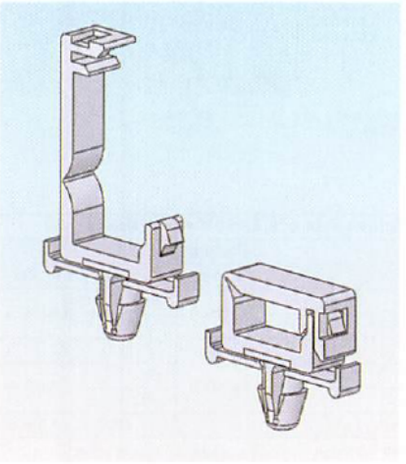

Features
- Clamp is easily removed from the top side of the board
- Supports the European WEEE initiative

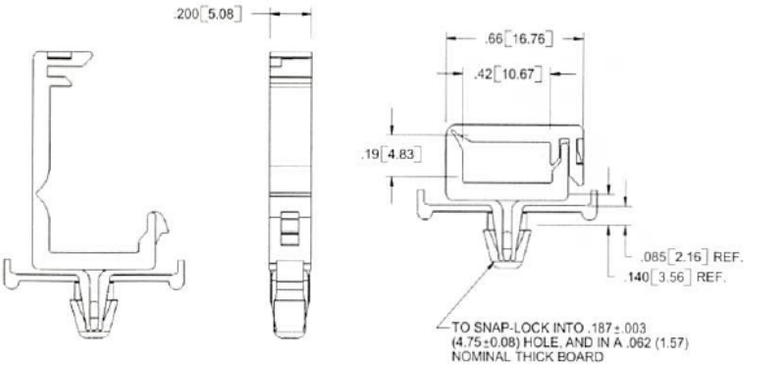

WSLTRA-1-01
Material: Nylon 6/6, RMS-01*
Color: Natural
Standard Pack: 1,000 per bag
*UL94 V0 Nylon, RMS-19 available by special order. To order, replace -01 with -19.

WSLT
Wire Saddle, Locking Top

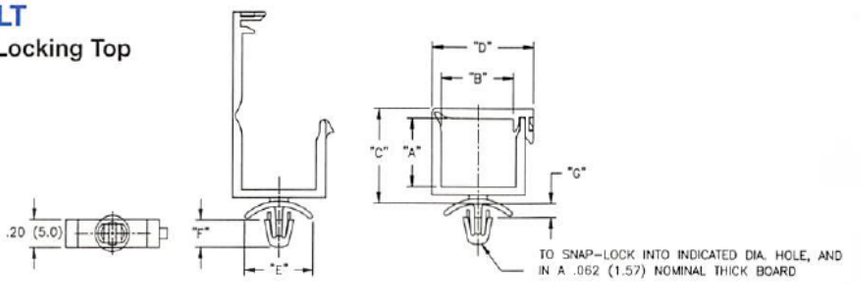

• UL #E71558

Features
- Lock is releasable for repair, replacement or addition of wire or cable

Part No.		Standard Pack: 1,000 per bag							
Mat'l: Nylon 6/6, RMS-01 Color Natural	Ma'l: UL94 V0 Nylon, 6/6, RMS-19 Color Natural	"A"	"B"	"C"	"D"	"E"	"F"	"G"	Hole Dia. ± .003 (±0.08)
WSLT-3.5-2-1-01	WSLT-3.5-2-1-19	.14 (3.4)	.53 (13.5)	.35 (8.9)	.77 (19.6)	.38 (9.5)	.118 (3)	.10 (2.5)	.138 (3.5)
WSLT-02-1-01	WSLT-02-1-19			.37 (9.4)		.56 (14.3)	7/32 (5.6)	.11 (2.8)	.187 (4.75)
WSLT-01A-01	WSLT-01A-19	.19 (4.8)	.42 (10.7)	.42 (10.6)	.66 (16.8)				
WSLT-01-2-01	WSLT-01-2-19	.35 (8.8)		.57 (14.6)					
WSLT-02A-01	WSLT-02A-19	.39 (10)	.64 (16.3)	.62 (15.8)	.88 (22.4)				
WSLT-02-2-01	WSLT-03-2-19	.55 (14.1)		.77 (19.6)					
WSLT-03-3-01	WSLT-03-3-19	.85 (21.7)	.71 (18)	1.07 (27.3)	.95 (24.1)				

539-4060 Sam
Get quote
Angic Global Solutions 1-888-872-0690
https://www.AngicGlobal.com Sales@AngicGlobal.com

SMWSLT
Side Mount Wire Saddle

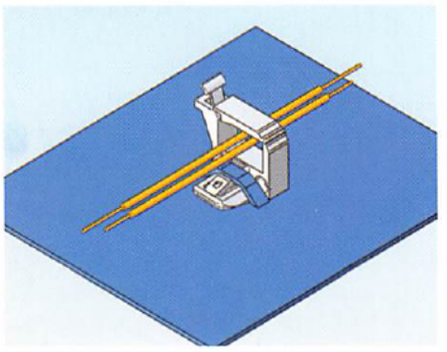

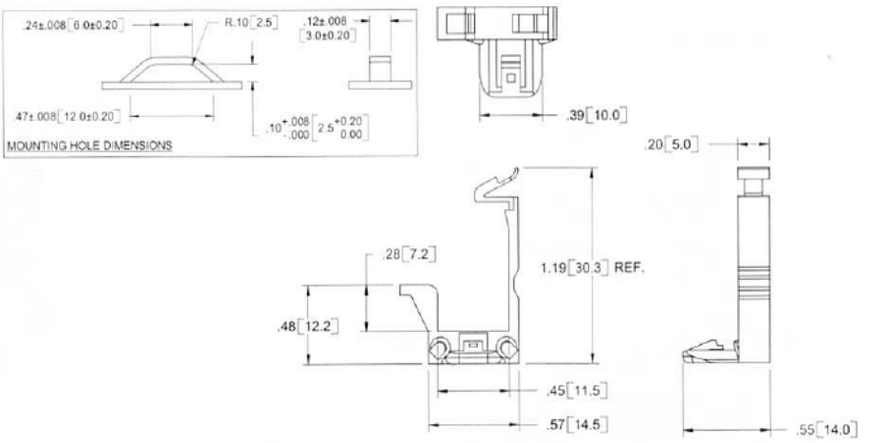

Features

- Design enables clamp to be mounted into a pre-pressed/punched slot eliminating below board protrusion
- Supports the European WEEE initiative

SMWSLT-1-156
Material: Nylon 6/6, UL 94 V0 rated, RMS-156
Color: Natural
Standard Pack: 1,000 per bag

WSLT-9
Wire Saddle, Locking Top Quarter-Turn Base

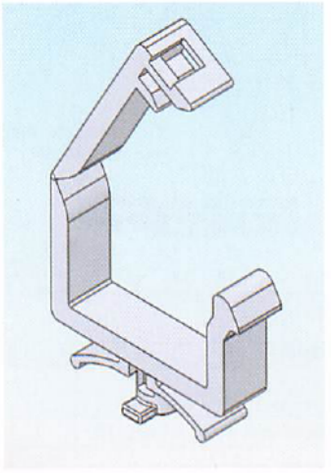

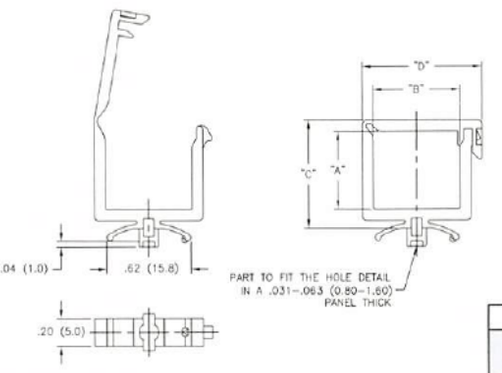

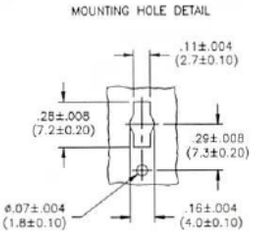

Features

- Easily inserted and removed by turning 90°
- Low protrusion base, only .04 (1) below chassis
- Supports the European WEEE initiative

Material: Nylon 6/6, RMS-01* • Color: Natural				
Part No.	Standard Pack: 1,000			
	"A" Ref.	"B" Ref.	"C" Ref.	"D" Ref.
WSLT-9-01A-01	.19 (4.8)	.42 (10.7)	.40 (10.2)	.66 (16.8)
WSLT-9-01-2-01	.36 (9.1)		.57 (14.4)	
WSLT-9-02-1-01	.14 (3.6)	.53 (13.5)	.36 (9.1)	.77 (19.6)
WSLT-9-02A-1-01	.39 (10)	.64 (16.3)	.60 (15.2)	.88 (22.4)
WSLT-9-03-2-01	.56 (14.1)		.76 (19.2)	
WSLT-9-03-3-01	.85 (21.7)	.71 (18)	1.06 (26.8)	.95 (24.1)
*UL94 V0 Nylon, RMS-19 available by special order. To order, replace -01 with -19				

WWS
Wide Wire Saddle

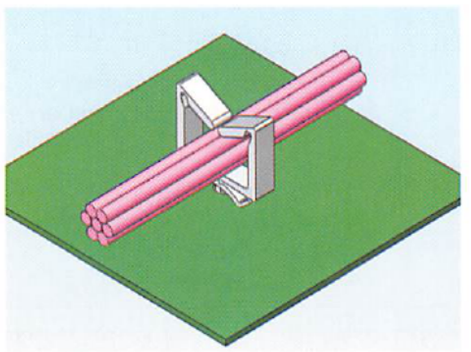

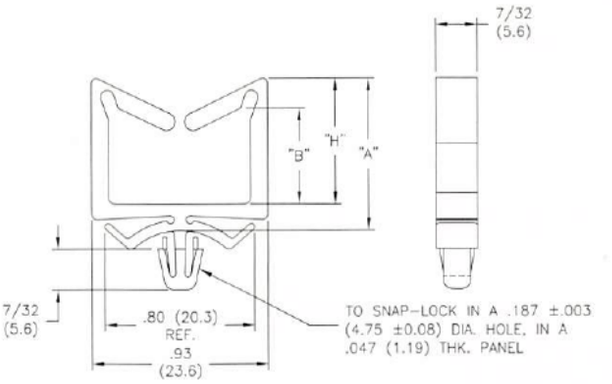

• UL #E71558

Features

- For wire bundles up to 3/4 (19.1) wide

Part No.		Standard Pack: 1,000 per bag		
Mat'l: Nylon 6/6, RMS-01 Color: Natural	Mat'l: UL94 V0, Nylon 6/6 RMS-19 Color: Natural	"A"	"B"	"H"
WWS-A-2-01	WWS-A-2-19	.77 (19.6)	.50 (12.7)	.64 (16.3)
WWS-A-3-01	WWS-A-3-19	1.12 (28.4)	.85 (21.6)	.99 (25.1)

-800-621-1892
Get quote
Angic Global Solutions 1-888-872-0690
https://www.AngicGlobal.com Sales@AngicGlobal.com

WS-A
Wire Saddle, Arrowhead Mount

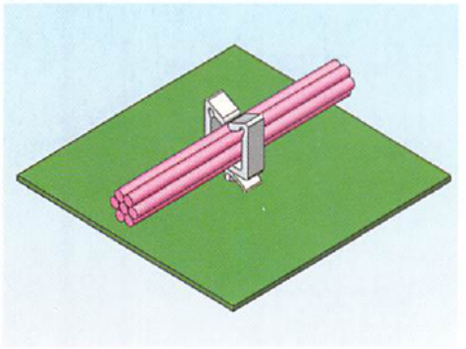

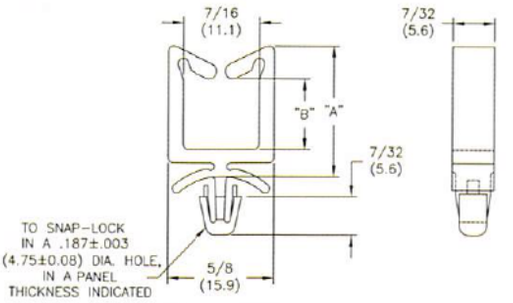

• UL #E71558

Features
- Assures precise routing
- Reduces assembly cost

Part No.		Color: Natural	Standard Pack: 1,000 per bag	
Material: Nylon 6/6, RMS-01	Material: UL94 V0 Nylon, 6/6, RMS-19	"A" Ref.	"B" Ref.	Panel Thickness
WS-A-1-01	WS-A-1-19	.51 (13)	.19 (4.8)	.062 (1.6)
WS-A-2-01	WS-A-2-19	.71 (18)	.39 (9.9)	
WS-A-3-01	WS-A-3-19	1.06 (26.9)	.75 (19.1)	
WS-A-4-01	WS-A-4-19	1.37 (34.8)	1.07 (27.2)	
WS-A-2-1-01	WS-A-2-1-19	.51 (13)	.19 (4.8)	.125 (3.2)
WS-A-2-2-01	WS-A-2-2-19	.71 (18)	.39 (9.9)	
WS-A-2-3-01	WS-A-2-3-19	1.06 (26.9)	.75 (19.1)	
WS-A-2-4-01	WS-A-2-4-19	1.37 (34.8)	1.07 (27.2)	

LWS-A
Locking Wire Saddle, Arrowhead Mount

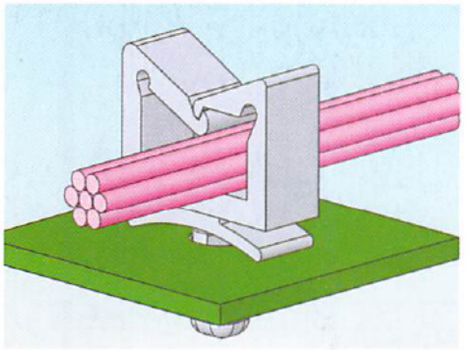

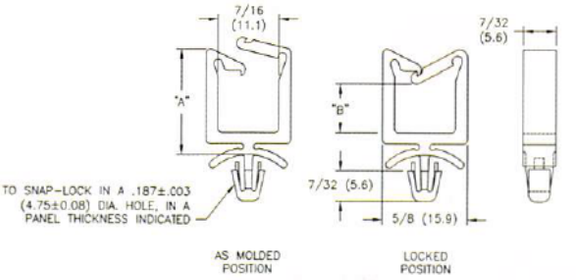

Features
- Assures precise routing
- Reduces assembly cost

Part No.		Color: Natural	Standard Pack: 1,000 per bag	
Material: Nylon 6/6, RMS-01	Material: UL94 V0 Nylon, 6/6, RMS-19	"A" Ref.	"B" Ref.	Panel Thickness
LWS-A-1-01	LWS-A-1-19	.51 (13)	.14 (3.6)	.062 (1.6)
LWS-A-2-01	LWS-A-2-19	.71 (18)	.34 (8.6)	
LWS-A-3-01	LWS-A-3-19	1.07 (27.2)	.72 (18.3)	
LWS-A-4-01	LWS-A-4-19	1.38 (35.1)	1.02 (25.9)	
LWS-A-2-1-01	LWS-A-2-1-19	.51 (13)	.19 (4.8)	.125 (3.2)
LWS-A-2-2-01	LWS-A-2-2-19	.71 (18)	.39 (9.9)	
LWS-A-2-3-01	LWS-A-2-3-19	1.07 (27.2)	.75 (19.1)	
LWS-A-2-4-01	LWS-A-2-4-19	1.38 (35.1)	1.07 (27.2)	

WS
Wire Saddle

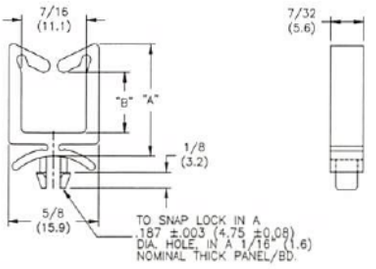

• UL #E71558

Part No.		Standard Pack: 1,000 per bag	
Mat'l: Nylon 6/6, RMS-01 Color: Natural	Mat'l: UL94 V0 Nylon, 6/6 RMS-19 Color: Natural	"A" Ref.	"B" Ref.
WS-1-01	WS-1-19	.51 (13)	.19 (4.8)
WS-2-01	WS-2-19	.71 (18)	.39 (9.9)
WS-3-01	WS-3-19	1.06 (26.9)	.75 (19.1)
WS-4-01	WS-4-19	1.37 (34.8)	1.07 (27.2)

LWS
Locking Wire Saddle

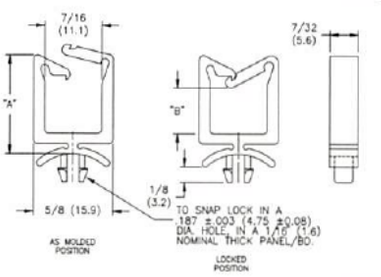

• UL #E71558

Part No.		Standard Pack: 1,000 per bag	
Mat'l: Nylon 6/6, RMS-01 Color: Natural	Mat'l: UL94 V0, Nylon 6/6 RMS-19 Color: Natural	"A" Ref.	"B" Ref.
LWS-1-01	LWS-1-19	.51 (13)	.14 (3.6)
LWS-2-01	LWS-2-19	.71 (18)	.34 (8.6)
LWS-3-01	LWS-3-19	1.07 (27.2)	.72 (18.3)
LWS-4-01	LWS-4-19	1.38 (35.1)	1.02 (25.9)

539-4060 Sam
Get quote
Angic Global Solutions 1-888-872-0690
https://www.AngicGlobal.com Sales@AngicGlobal.com

WSBH/LWSBH
Wire Saddle with Blind Hole Mount

• UL #E71558

Mat'l: Nylon 6/6, RMS-01* Color: Natural			
Part No.	Standard Pack: 1,000 per bag		
Material: Nylon 6/6, RMS-01	"A" Ref.	"B" Ref.	Fig.
WSBH-1-01	.51 (13)	.14 (3.6)	1
WSBH-2-01	.72 (18.3)	.34 (8.6)	
WSBH-3-01	1.07 (27.2)	.70 (17.8)	
WSBH-4-01	1.40 (35.6)	1.02 (25.9)	
LWSBH-1-01	.51 (13)	.23 (5.8)	2
LWSBH-2-01	.72 (18.3)	.44 (11.2)	
LWSBH-3-01	1.07 (27.2)	.79 (20.1)	
LWSBH-4-01	1.40 (35.6)	1.11 (28.2)	
*Available in UL94 V0 material by special order only. To order, replace -01 with -19.			

Fig. 1

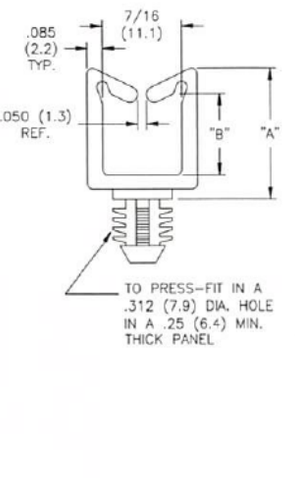

Fig. 2

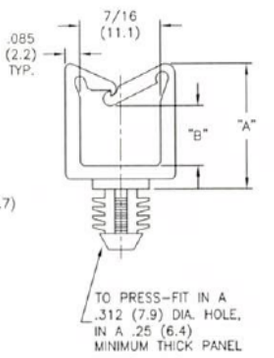

WS-SE-A
Wire Saddle, Side Entry

NEW

Fig. 1

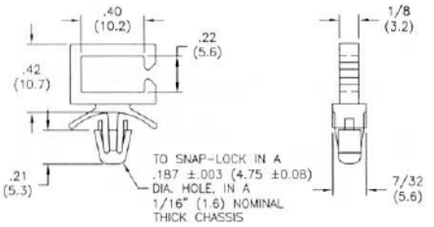

Fig. 2

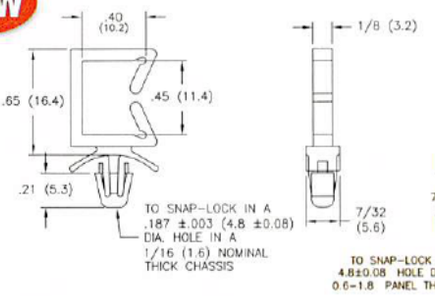

Fig. 3

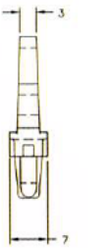

Part No.		Standard Pack: 1,000 per bag
Mat'l: Nylon 6/6, RMS-01 Color: Natural	Mat'l: UL94 V0, Nylon 6/6 RMS-19 Color: Natural	Fig.
WS-SE-A-1-01	WS-SE-A-1-19	1
WS-SE-A-2-01	WS-SE-A-2-19	2
WS-SE-A-3-01	WS-SE-A-3-19	3

I

LWS-SE2
Locking Wire Saddle, Side Entry

• UL #E71558

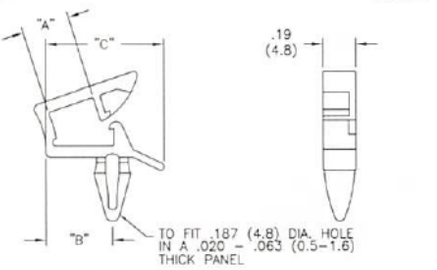

Material: Nylon 6/6, RMS-01* Color: Natural			
Part No.	Standard Pack: 1,000 per bag		
	"A"	"B"	"C"
LWS-SE2-1-01	.27 (6.9)	.38 (9.7)	.67 (17)
LWS-SE2-2-01	.40 (10.2)	.53 (13.5)	.82 (20.8)
*UL94 V0 Nylon, RMS-19 available by special order .			

WS-SE1
Wire Saddle, Side Entry

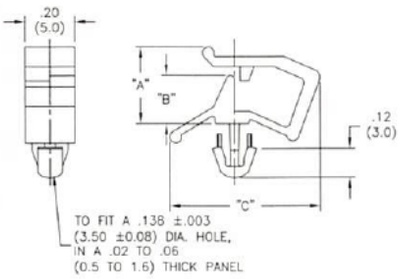

Material: Nylon 6/6, RMS-01* • Color: Natural			
Part No.	Standard Pack: 1,000 per bag		
	"A"	"B"	"C"
WS-SE1-1-01	.19 (4.8)	.09 (2.3)	.50 (12.7)
WS-SE1-2-01	.26 (6.6)	.16 (4.1)	.59 (15)
WS-SE1-3-01	.34 (8.6)	.23 (5.8)	.81 (20.6)
*UL94 V0 Nylon, RMS-19 available by special order .			

WS-SE2
Wire Saddle, Side Entry

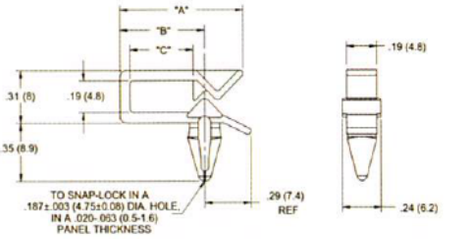

• UL #E71558

Material: Nylon 6/6, RMS-01* Color: Natural			
Part No.	Standard Pack: 1,000 per bag		
	"A"	"B"	"C"
WS-SE2-1-01	.65 (16.6)	.41 (10.5)	.28 (7.1)
WS-SE2-2-01	.77 (19.5)	.53 (13.4)	.39 (10)
*UL94 V0 Nylon, RMS-19 available by special order .			

800-621-1892
Get quote
Angic Global Solutions 1-888-872-0690
https://www.AngicGlobal.com Sales@AngicGlobal.com

WS-9/LWS-9

Wire Saddle, Quarter Turn

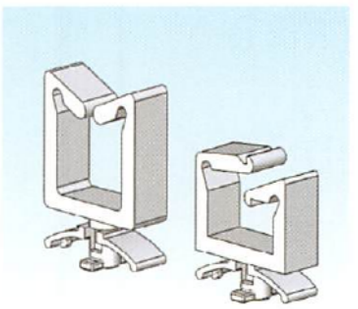

Fig. 1

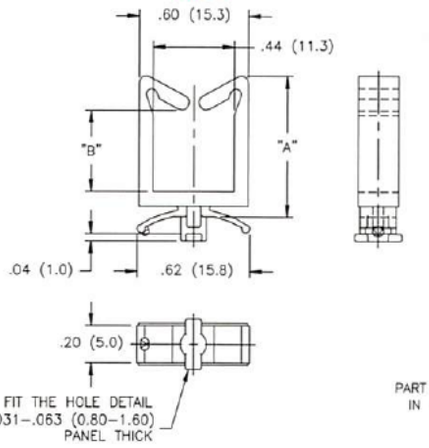

Fig. 2

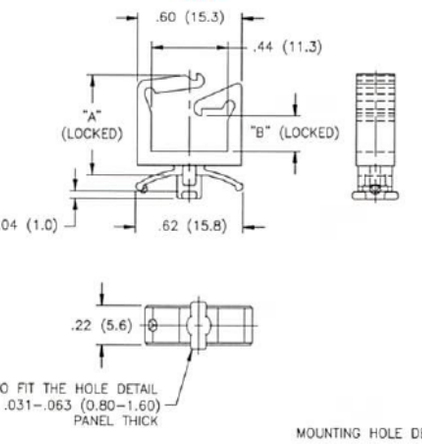

Features

- Easily inserted and removed by turning 90°
- Low protrusion base, only .04 (1) below chassis
- Supports the European WEEE initiative

Mat'l: Nylon 6/6, RMS-01* Color: Natural			
Part No.	Standard Pack: 1,000 per bag		
Material: Nylon 6/6, RMS-01	"A" Ref.	"B" Ref.	Fig.
WS-9-1-01	.512 (13)	.189 (4.8)	1
WS-9-2-01	.74 (18.8)	.390 (9.9)	
WS-9-3-01	1.059 (26.92)	.752 (19.1)	
WS-9-4-01	1.37 (34.8)	1.071 (27.2)	
LWS-9-1-01	.512 (13)	.189 (4.8)	2
LWS-9-2-01	.74 (18.8)	.386 (9.8)	
LWS-9-3-01	1.071 (27.2)	.748 (19)	
LWS-9-4-01	1.382 (35.1)	1.055 (26.8)	
*Available in UL94 V0 material by special order only. To order, replace -01 with -19.			

MOUNTING HOLE DETAIL

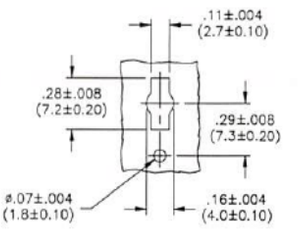

WS-SR/LWS-SR

Wire Saddle- Snap Rivet Mount

Fig. 1

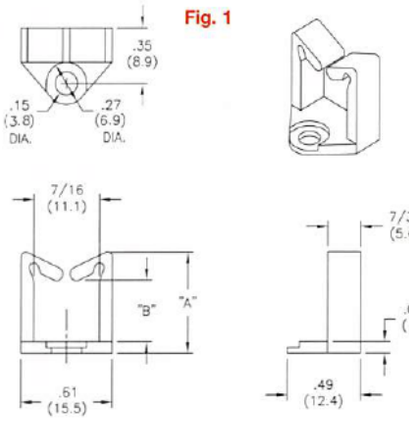

Fig. 2

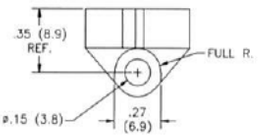

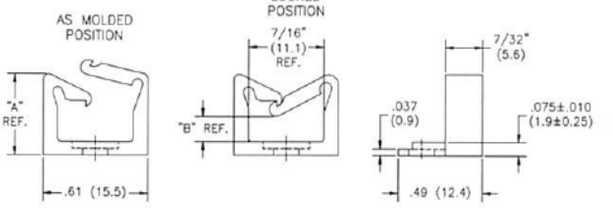

Features

- Mounts with a screw or rivet
- Rivet sold separately
- Panel Mounting Hole is .142-.146 (3.6 - 3.7)

Mat'l: Nylon 6/6, RMS-01* Color: Natural				
Part No.	Standard Pack: 1,000 per bag			
Material: Nylon 6/6, RMS-01	"A" Ref.	"B" Ref.	Mounting Hole Dia.	Fig
WS-SR-1-01	.45 (11.4)	.17 (4.3)	.142 - .146 (3.6 - 3.7)	1
WS-SR-2-01	.64 (16.3)	.36 (9.1)		
WS-SR-3-01	1.00 (25.4)	.73 (18.5)		
WS-SR-4-01	1.31 (33.3)	1.04 (26.4)		
LWS-SR-1-01	.45 (11.4)	.14 (3.6)		2
LWS-SR-2-01	.64 (16.3)	.34 (8.6)		
LWS-SR-3-01	1.00 (25.4)	.72 (18.3)		
LWS-SR-4-01	1.31 (33.3)	1.00 (25.4)		
*Available in UL94 V0 material by special order only. To order, replace -01 with -19.				

Use Richco Rivet No.	Standard Pack: 1,000 per bag For Chassis Thickness Range
SR-3535	.010-.046 (0.3-1.2)
SR-3545	.046-.081 (1.2-2.1)
SR-3550	.069-.105 (1.8-2.7)
SR-3555	.081-.120 (2.1-3)
SR-3560	.109-.144 (2.8-3.7)
SR-3570	.140-.180 (3.6-4.6)
SR-3580	.180-.219 (4.6-5.6)

*Snap Rivets are shown on page 52

Get quote
Angic Global Solutions 1-888-872-0690
https://www.AngicGlobal.com Sales@AngicGlobal.com

WSLT-T-01A-19

Wire Saddle Locking Top Teardrop

NEW

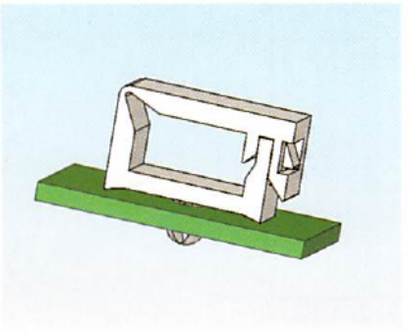

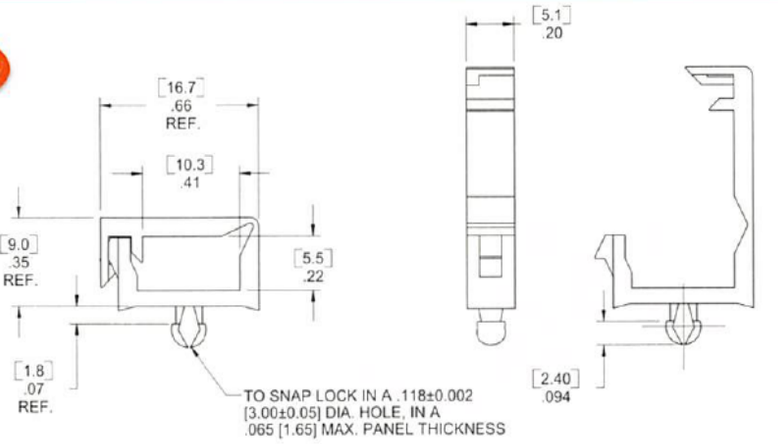

Features

- Lock is releasable for repair, replacement or addition of wire or cable
- Teardrop eases insertion and increases holding power with little protrusion under the chassis

Material: UL94V0 Nylon 6/6, RMS-19 Color: Black
Standard Pack: 1,000 per Bag

MWSLT

Micro Wire Saddle, Locking Top

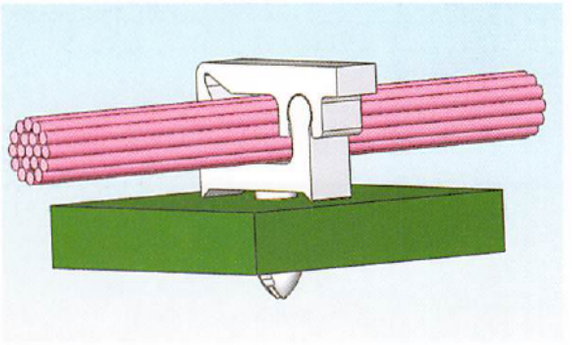

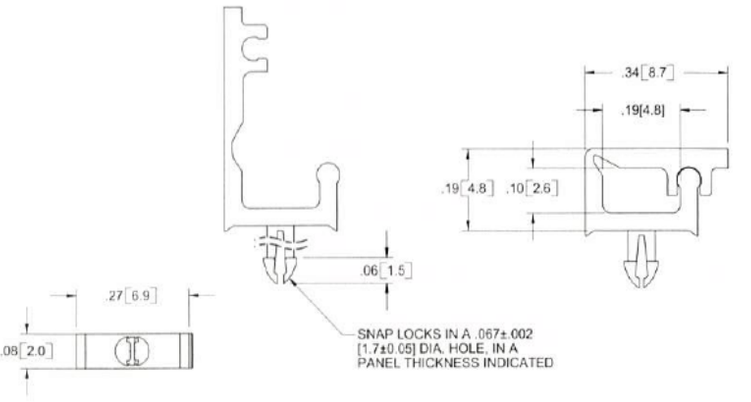

Features

- Fiber or cables can be placed into clamp without crimping
- Locking top is releasable for repair, replacement or addition of fiber

Part No.		Standard Pack: 1,000 per bag
Mat'l: Nylon 6/6, RMS-01 Color: Natural	Mat'l: UL94 V0 Nylon, 6/6 RMS-19 Color: Natural	Panel Thickness
MWSLT-1-01	MWSLT-1-19	.063 (1.6)
MWSLT1-1-01	MWSLT1-1-19	.093 (2.4)

I

MBHWSSE

Micro Blind Hole Mount Wire Saddle

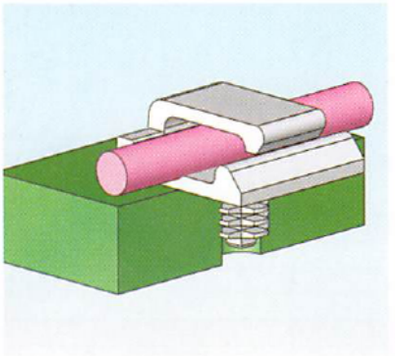

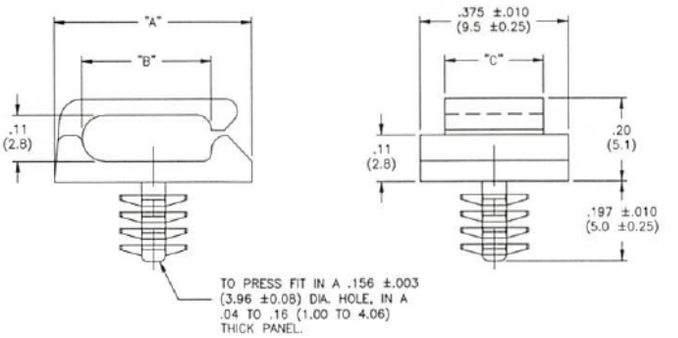

Features

- Flexible ribs lock into round, oval, threaded or drilled blind holes
- Ribs deflect when pressed into hole then spring back to lock in place

Material: Nylon 6/6, RMS-01* Color: Natural			
Part No.	Standard Pack: 1,000 per bag		
	"A" ± .010 (0.25)	"B" ± .010 (0.25)	"C" ± .010 (0.25)
MBHWSSE-1-01	.50 (12.7)	.33 (8.3)	.25 (6.4)
MBHWSSE1-1-01	.67 (17)	.49 (12.5)	.315 (8)
*UL94 V0 Nylon, RMS-19 available by special order. To order, replace -01 with -19.			

800-621-1892
Angic Global Solutions 1-888-872-0690
https://www.AngicGlobal.com Sales@AngicGlobal.com
Get quote

MWSET
Micro Wire Saddles

NEW

MWSET1

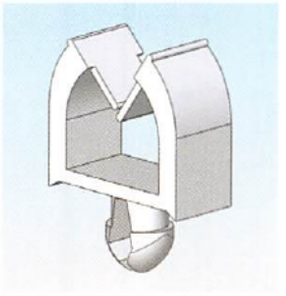

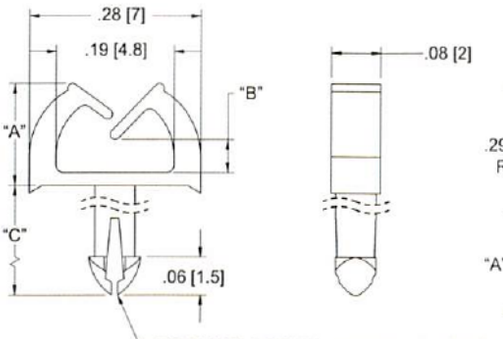

TO SNAP-LOCK IN A .067±.002 [1.7±0.08] DIAMETER HOLE, IN THE INDICATED PANEL THICKNESS

MWSET2

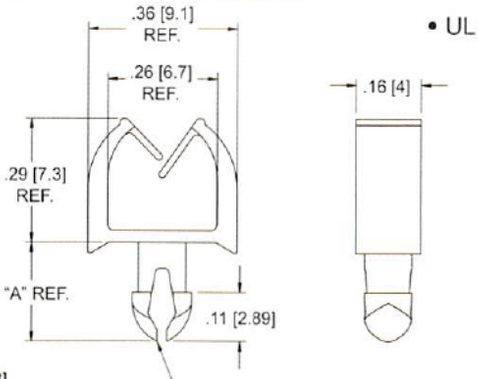

TO SNAP-LOCK IN A .118±.002 [3±0.05] HOLE DIA., IN THE INDICATED PANEL THICKNESS

• UL #E71558

Part No.		Color: Natural Standard Pack: 1,000 per bag			
Material: Nylon 6/6, RMS-01	Material: UL94 V0 Nylon, 6/6, RMS-19	"A" Ref.	"B" Ref.	"C"	Panel Thickness
MWSET1-1-01	MWSET1-1-19	.16 (4)	.04 (0.9)	.13 (3.3	.063 (1.6)
MWSET1-2-01	MWSET1-2-19	.24 (6)	.11 (2.9)		
MWSET1-1-1-01	MWSET1-1-1-19	.16 (4)	.04 (0.9)	.16 (4.1)	.093 (2.4)
MWSET1-2-1-01	MWSET1-2-1-19	.24 (6)	.11 (2.9)		

Part No.		Color: Natural Standard Pack: 1,000 per bag	
Material: Nylon 6/6, RMS-01	Material: UL94 V0 Nylon, 6/6, RMS-19	"A" Ref.	Panel Thickness
MWSET2-1-01	MWSET2-1-19	.169 (4.29)	.039-.047 (1-1.2)
MWSET2-2-01	MWSET2-2-19	.189 (4.79)	.047-.063 (1.2-1.6)
MWSET2-3-01	MWSET2-3-19	.199 (5.05)	.055-.071 (1.4-1.8)
MWSET2-4-01	MWSET2-4-19	.229 (5.81)	.087-.102 (2.2-2.6)

MWSEA1/2
Micro Wire Saddle

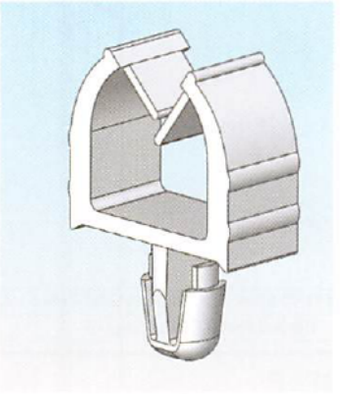

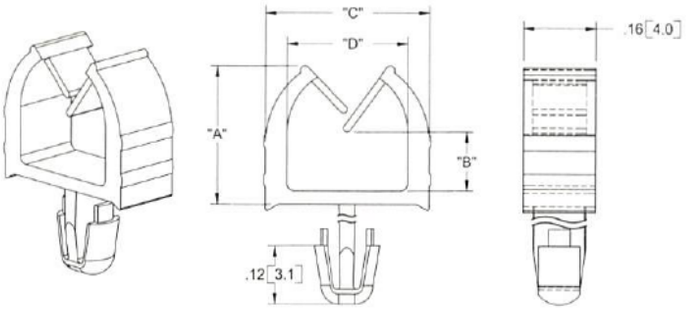

• UL #E71558

Standard Pack: 1,000 per bag Color: Natural									
Part No.	Hole Dia	Part No	Hole Dia	Panel Thickness	Material	"A" Ref.	"B" Ref.	"C" Ref.	"D" Ref
MWSEA1-1-01	.118 ± .002 (3 ± 0.05)	MWSEA2-1-01	.138 ± .002 (3.5 ± 0.05)	.063 (1.6)	Nylon 6/6, RMS-01	.29 (7.3)	.12 (3)	.36 (9.1)	.26 (6.6)
MWSEA1-1-19		MWSEA2-1-19			UL94 V0 Nylon 6/6, RMS-19				
MWSEA1-1-1-01		MWSEA2-1-1-01		.093 (2.4)	Nylon 6/6, RMS-01				
MWSEA1-1-1-19		MWSEA2-1-1-19			UL94 V0 Nylon 6/6, RMS-19				
MWSEA1-2-01		MWSEA2-2-01		.063 (1.6)	Nylon 6/6, RMS-01	.36 (9.1)	.16 (3.9)	.42 (10.8)	.32 (8.1)
MWSEA1-2-19		MWSEA2-2-19			UL94 V0 Nylon 6/6, RMS-19				
MWSEA1-1-2-01		MWSEA2-1-2-01		.093 (2.4)	Nylon 6/6, RMS-01				
MWSEA1-1-2-19		MWSEA2-1-2-19			UL94 V0 Nylon 6/6, RMS-19				
MWSEA1-3-01		MWSEA2-3-01		.063 (1.6)	Nylon 6/6, RMS-01	.44 (11.2)	.24 (6)	.47 (12)	.36 (9.1)
MWSEA1-3-19		MWSEA2-3-19			UL94 V0 Nylon 6/6, RMS-19				
MWSEA1-1-3-01		MWSEA2-1-3-01		.093 (2.4)	Nylon 6/6, RMS-01				
MWSEA1-1-3-19		MWSEA2-1-3-19			UL94 V0 Nylon 6/6, RMS-19				
MWSEA1-4-01		MWSEA2-4-01		.063 (1.6)	Nylon 6/6, RMS-01	.51 (13)	.30 (7.7)		
MWSEA1-4-19		MWSEA2-4-19			UL94 V0 Nylon 6/6, RMS-19				
MWSEA1-1-4-01		MWSEA2-1-4-01		.093 (2.4)	Nylon 6/6, RMS-01				
MWSEA1-1-4-19		MWSEA2-1-4-19			UL94 V0 Nylon 6/6, RMS-19				

Get quote
Angic Global Solutions 1-888-872-0690
https://www.AngicGlobal.com Sales@AngicGlobal.com

MWS
Micro Wire Saddle

NEW

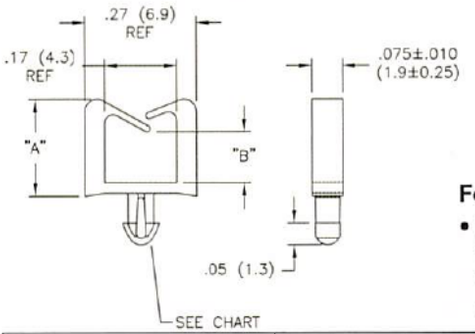

• UL #E71558

Features
- Holds up to ten 26 gauge wires; 1/32 (0.8) outside dia.

Part No.		Color: Natural		Standard Pack: 1,000 per bag		
Material: Nylon 6/6, RMS-01	Material: UL94 V0 Nylon, 6/6, RMS-19	"A" Ref.	"B" Ref.	"C"	Hole Dia	Panel Thickness
MWS-1-01	MWS-1-19	.23 (5.8)	.12 (3.0)	.13 (3.3	.070 ± .002 (1.75 ± 0.05)	.062 (1.57)
MWS1-1-01	MWS1-1-19					.093 (2.36)
-	MWS-2-19	.44 (11.2)	.33 (8.5)	.16 (4.1)		.063 (1.60)
-	MWS-3-19					.087 (2.20)

MOFNSA
Micro Wire Saddle

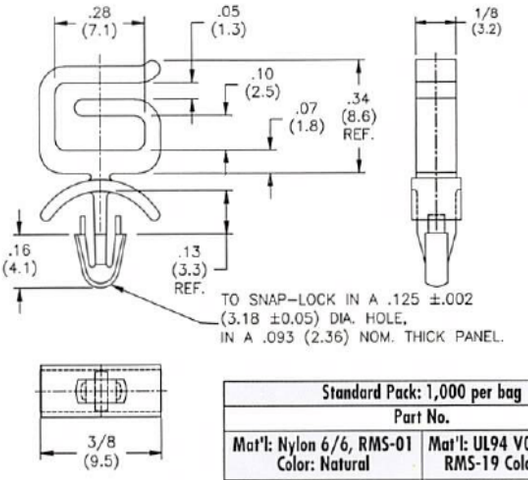

Standard Pack: 1,000 per bag	
Part No.	
Mat'l: Nylon 6/6, RMS-01 Color: Natural	Mat'l: UL94 V0 Nylon, 6/6 RMS-19 Color: Natural
MOFNSA-2-01	MOFNSA-2-19

MWSEA3
Micro Wire Saddle

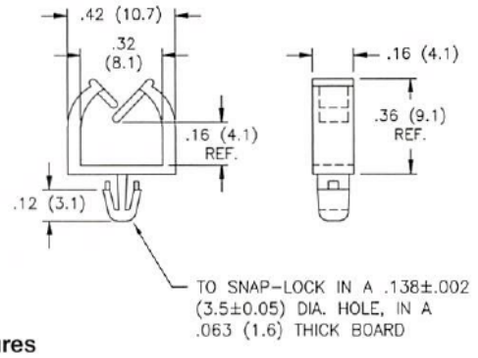

Features
- Flat base puts little stress on fiber when inserted into saddle

Material: Nylon 6/6, RMS-01 Color: Natural	Material: UL94 V0 Nylon, 6/6, RMS-19 Color: Natural
Standard Pack: 1,000 per bag	
MWSEA3-2-01	MWSEA3-2-19

PWS-1-104
Pico Wire Saddle

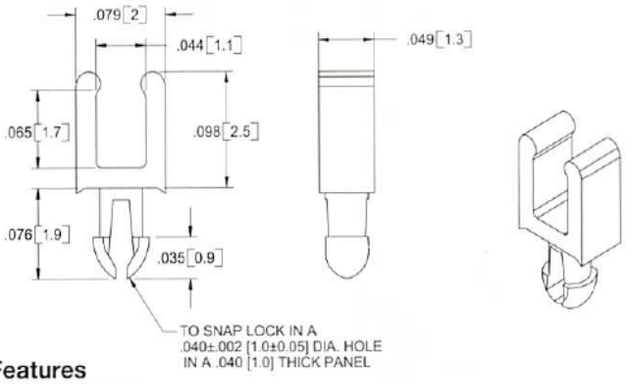

Features
- Ideal for routing up to three 900 micron fibers

Material: UL94 V0 Nylon, 6/6, RMS-104 Color: Natural
Standard Pack: 1,000 per bag

SMWS
Standoff Micro Wire Saddle

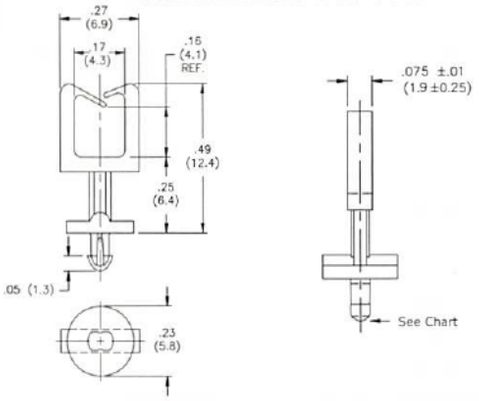

Features
- Routes fiber above crowded boards

Part No.		Standard Pack: 1,000 per bag	
Mat'l: Nylon 6/6, RMS-01 Color: Natural	Mat'l: UL94 V0 Nylon, 6/6 RMS-19 Color: Natural	Hole Dia.	Panel Thickness
SMWS-1-01	SMWS-1-19	.070 ± .002 (1.78 ± 0.05)	.062 (1.57)
SMWS1-1-01	SMWS1-1-19		.093 (2.36)

MWSELF
Stand-Off Micro Wire Saddle

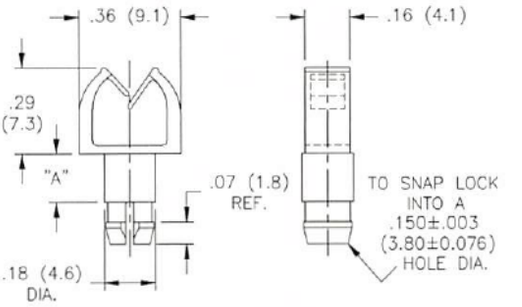

Part No.		Standard Pack: 1,000 per bag	
Mat'l: Nylon 6/6, RMS-01 Color: Natural	Mat'l: UL94 V0 Nylon, 6/6 RMS-19 Color: Natural	"A"	Panel Thickness
MWSELF-1-4.1-01	MWSELF-1-4.1-19	.16 (4.1)	.063 (1.6)
MWSELF-1-7.7-01	MWSELF-1-7.7-19	.30 (7.6)	
MWSELF-2-4.1-01	MWSELF-2-4.1-19	.16 (4.1)	.079 (2)
MWSELF-2-7.7-01	MWSELF-2-7.7-19	.30 (7.6)	

800-621-1892
Angic Global Solutions 1-888-872-0690
https://www.AngicGlobal.com Sales@AngicGlobal.com
Get quote

MWSEB

Micro Wire Saddle on Adhesive Base

• UL #E71558

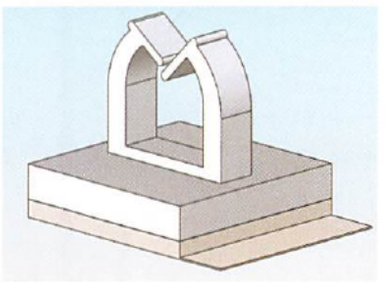

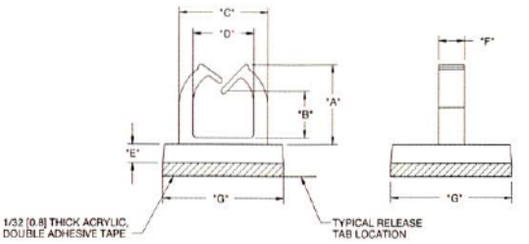

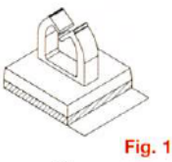

Fig. 1

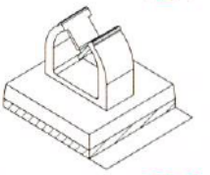

Fig. 2

Features

- Miniature base for space saving applications
- Adhesive mounting eliminates the need for mounting hole

Part No.		Color: Natural Standard Pack: 1,000 per bag							
Material: Nylon 6/6, RMS-01	Material: UL94 V0 Nylon 6/6, RMS-19	"A" Ref.	"B" Ref.	"C" Ref.	"D" Ref.	"E" Ref.	"F" Ref.	"G" Ref.	Fig	Adhesive Material
MWSEB-1-01A-RT	MWSEB-1-19A-RT	.16 (4)	.05 (1.3)	.28 (7)	.19 (4.8)	.06 (1.6)	.08 (2)	.37 (9.5)	1	RMS-15
MWSEB-2-01A-RT	MWSEB-2-19A-RT	.24 (6)	.13 (3.3)		.39 (9.9)					
MWSEB-3-01A-RT	MWSEB-3-19A-RT	.29 (7.3)	.12 (3)	.35 (9)	.75 (19.1)	.08 (2)	.16 (4)	.50 (12.7)	2	
MWSEB-4-01A-RT	MWSEB-4-19A-RT	.36 (9.2)	.17 (4.2)	.43 (10.8)	1.07 (27.2)					
MWSEB-5-01A-RT	MWSEB-5-19A-RT	.44 (11.2)	.23 (5.8)	.47 (11.9)	.19 (4.8)					
MWSEB-6-01A2-RT	MWSEB-6-19A2-RT	.51 (13)	.30 (7.6)		.39 (9.9)					

MWSB

Micro Wire Saddle on Adhesive Base

• UL #E71558

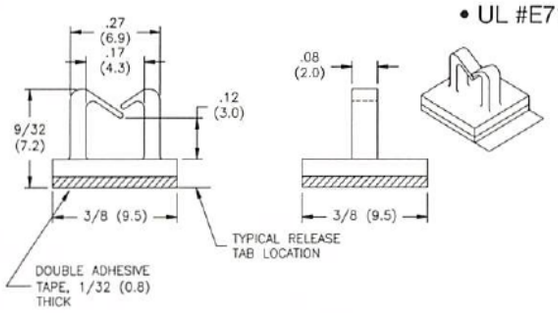

Adhesive Material: Acrylic, RMS-15	
Standard Pack: 1,000 per bag	
Part No.	
Mat'l: Nylon 6/6, RMS-01 Color: Natural	Mat'l: UL94 V0 Nylon, 6/6 RMS-19 Color: Natural
MWSB-1-01A-RT	MWSB-1-19A-RT

WSB-2-01A-RT

Wire Saddle on Adhesive Base

• UL #E71558

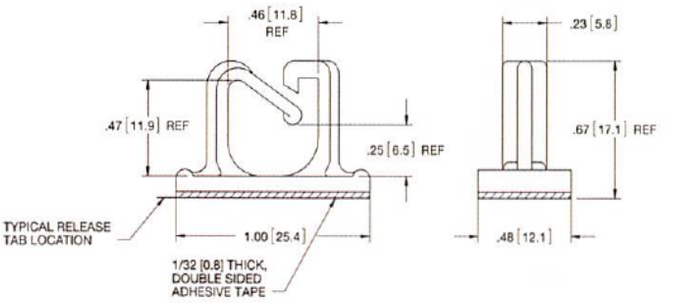

Material: Nylon 6/6, RMS-01* • Adhesive Back: RMS-15 Color: Natural
Standard Pack: 1,000 per bag
*UL94 V0 Nylon, RMS-19 available. To order, replace -01 with -19

MWSSEB/MWSSEBE

Side Entry Micro Wire Saddle on Adhesive Base

• UL #E71558

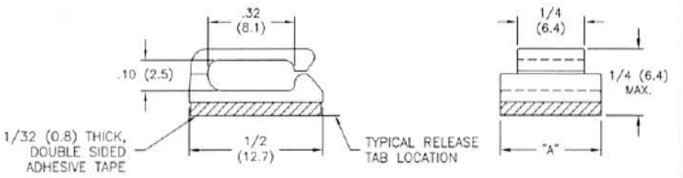

Features

- Low profile will not exceed standard I.C. height

Material: Nylon 6/6, RMS-01* Color: Natural		
Part No.	Standard Pack: 1,000 per bag "A"	Adhesive Material
MWSSEB-1-01A-RT	3/8 (9.5)	RMS-15
MWSSEBE-1-01A-RT	1/2 (12.7)	
*UL94 V0 Nylon, RMS-19 available. To order, replace -01 with -19.		

MOFNSB

Mini Optical Fiber Network Saddle on Adhesive Base

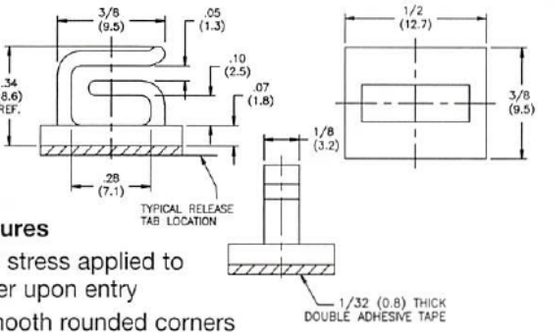

Features

- No stress applied to fiber upon entry
- Smooth rounded corners

Adhesive Back: RMS-15	
Standard Pack: 1,000 per bag	
Part No.	
Mat'l: Nylon 6/6, RMS-01 Color: Natural	Mat'l: UL94 V0 Nylon, 6/6 RMS-19 Color: Natural
MOFNSB-2-01A-RT	MOFNSB-2-19A-RT

I

ANGIC GLOBAL SOLUTIONS
Get quote
539-4060 Sam
Angic Global Solutions 1-888-872-0690
https://www.AngicGlobal.com Sales@AngicGlobal.com

MWSLTB
Micro Wire Saddle Locking Top on Base

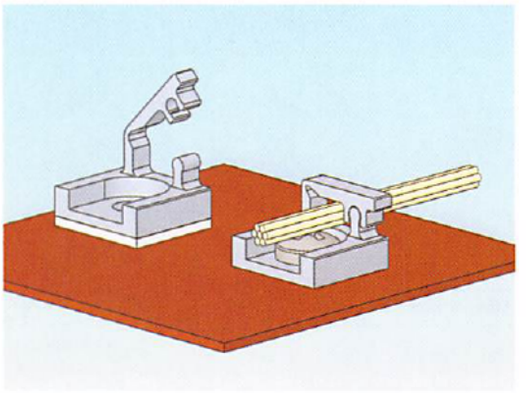

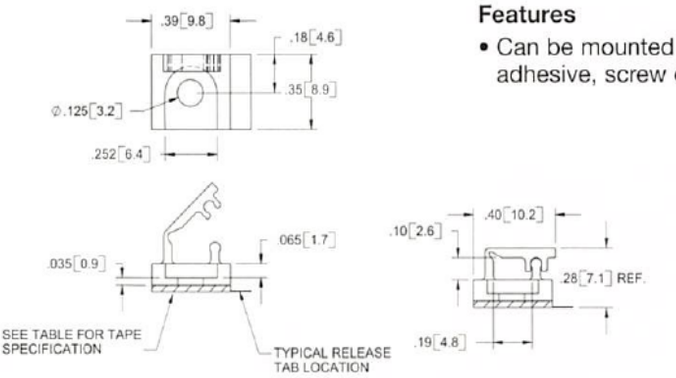

Features
- Can be mounted with adhesive, screw or rivet

Material: UL94 V0 Nylon, 6/6, RMS-19 • Color: Natural	
Standard Pack: 1,000 per bag	
Part No.	**Mounting Method**
MWSLTB-1-19A-RT	Acrylic Adhesive, RMS-15, 1/32 (0.8) thick
MWSLTB-1-19	Any SR-30XX rivet or #4 or M3 screw
See Pg. 52 for SR series rivets	

WSLTB
Wire Saddle Locking Top on Base

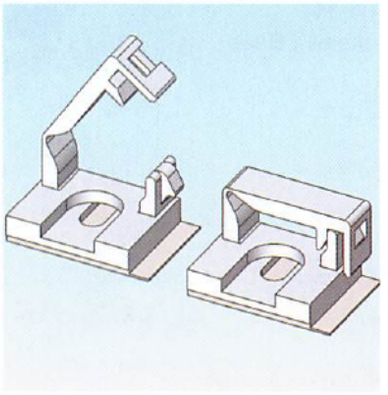

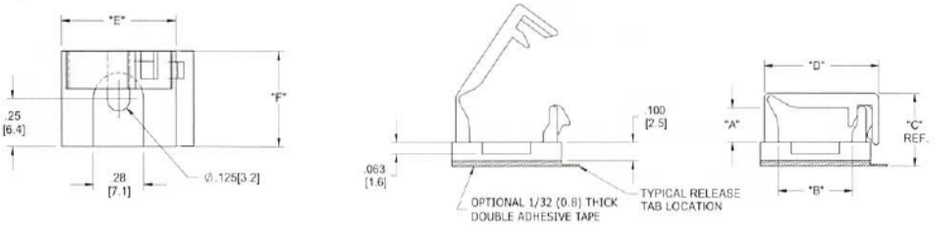

Features
- Can be mounted with adhesive, screw or rivet

Mat'l: UL94 V0 Nylon, 6/6, RMS-19 • Color: Natural							
Standard Pack: 1,000 per bag							
Part No.	**"A"**	**"B"**	**"C"**	**"D"**	**"E"**	**"F"**	**Mounting Method**
WSLTB-01A-19A-RT	.19 (4.8)	.42 (10.7)	.41 (10.4)	.66 (16.8)	.63 (16)	.50 (12.7)	Acrylic Adhesive, RMS-15
WSLTB-01A-19	.19 (4.8)	.42 (10.7)	.38 (9.6)	.66 (16.8)	.63 (16)		Any *SR-3XXX rivet or #4 or M3 screw
WSLTB-02A-19A-RT	.39 (10)	.64 (16.3)	.61 (15.5)	.88(22.4)	.85 (21.5)		Acrylic Adhesive, RMS-15
WSLTB-02A-19	.39 (10)	.64 (16.3)	.58 (14.7)	.88(22.4)	.85 (21.5)		Any *SR-3XXX rivet or #4 or M3 screw
*See Pg. 52 for SR series rivets							

RWSB
Round Wire Saddle on Base

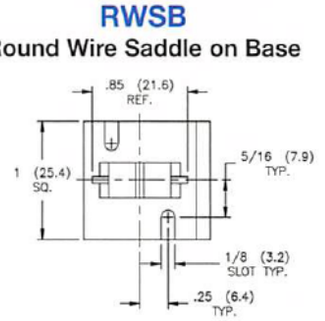

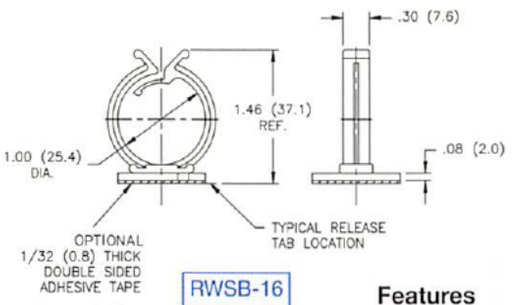

RWSB-16

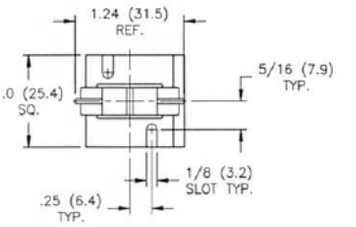

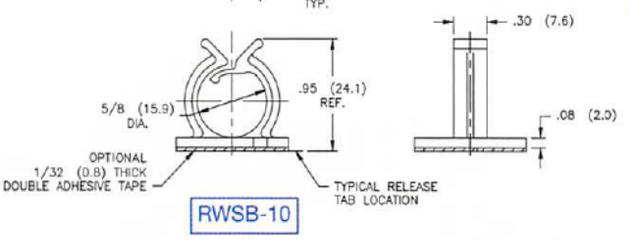

RWSB-10

Features
- Can be mounted with adhesive, screw or rivet

Material: Nylon 6/6, RMS-01*; Adhesive Back, RMS-15 • Color: Natural			
Standard Pack: 1,000 per bag			
RWSB-10		RWSB-16	
W/O Tape	With Tape	W/O Tape	With Tape
RWSB-10-01	RWSB-10-01A-RT	RSWB-16-01	RWSB-16-01A-RT
*UL94 V0 Nylon, RMS-19 available by special order. To order, replace -01 with -19.			

800-621-1892
Angic Global Solutions 1-888-872-0690
https://www.AngicGlobal.com Sales@AngicGlobal.com
Get quote

WS-SE-B
Side Entry Wire Saddle on Adhesive Base

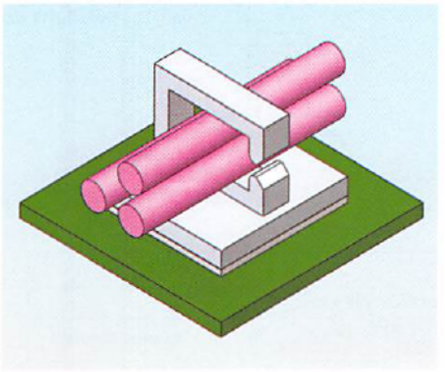

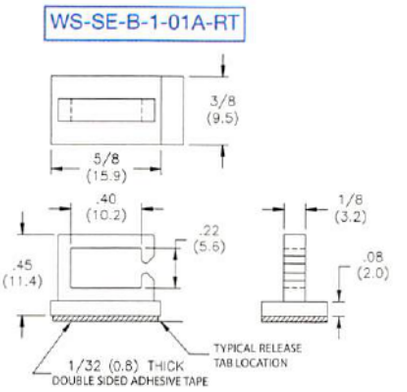

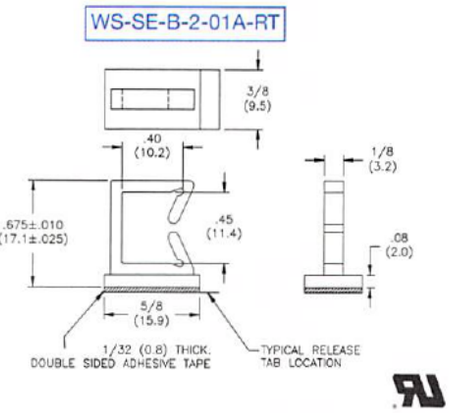

• UL #E71558

Features
- Adheres to any clean, smooth, hard surface
- Routes wires vertically and horizontally

Material: Nylon 6/6, RMS-01* • Adhesive Back: RMS-15 Color: Natural
Standard Pack: 1,000 per bag
*UL94 V0 Nylon, RMS-19 available by special order. To order replace -01 with -19.

SWC-0
Single Wire Clip on Adhesive Base

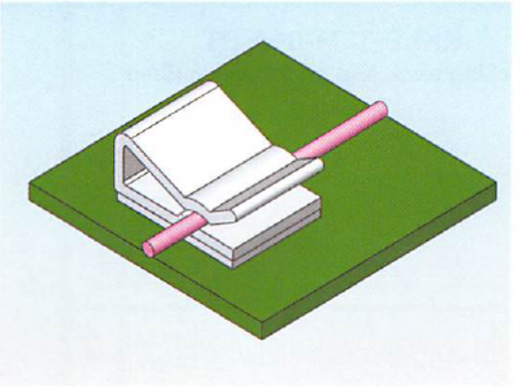

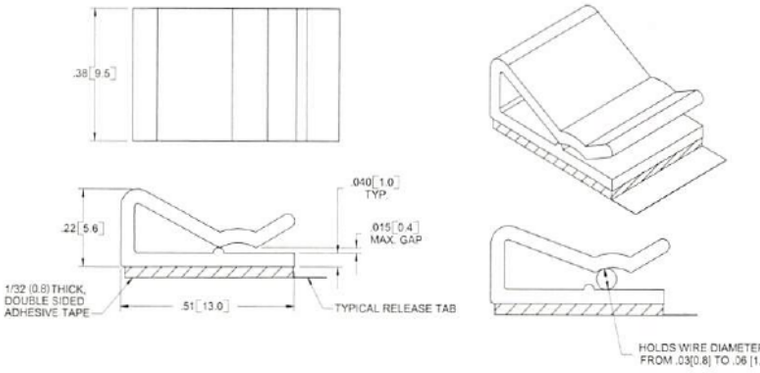

Mat'l: Noryl, RMS-05; Adhesive back, RMS-15 • Color: White
Standard Pack: 1,000 per bag

Features
- Ideal for routing single cable diameters of .03-.06 (0.8-1.5)
- To insert or remove cable, simply lift the tip of the clamp

WWSB
Wire Saddle on Adhesive Base

NEW

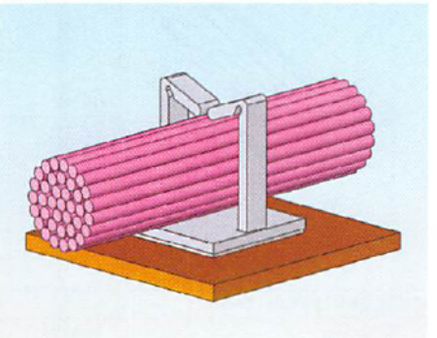

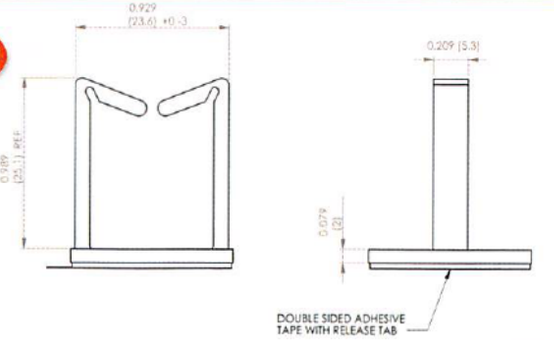

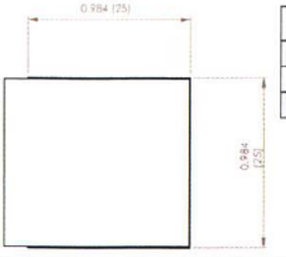

WWSB-3-148A-RT
Mat'l: Nylon 6/6, RMS-148 Double Adhesive Back, RMS-324
Color: Natural
Standard Pack: 1,000 per bag

Get quote
Angic Global Solutions 1-888-872-0690
https://www.AngicGlobal.com Sales@AngicGlobal.com

AKKL
Adjustable Kwik Klip

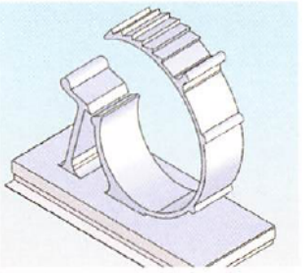

Features
- Locks securely and can be easily reopened for routing changes
- Adjustable to hold various bundle diameters

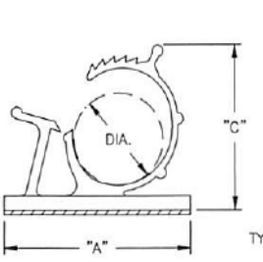

• UL #E71558
Does not apply to AKKL-10112 size

Material: Nylon 6/6, RMS-01 or UL94 V0 Nylon, RMS-19 • Color: Natural									
Part No.				Standard Pack: 100 pieces					
Nylon w/o Tape	Nylon w/Tape	UL94 V0 Nylon w/o Tape	UL94 V0 Nylon w/Tape	Bundle Dia. Range Ref.	"A" ± .015 (0.4)	"B" ± .015 (0.4)	"C" Ref.	"D"	Adhesive Material
AKKL-2140-01	AKKL-2140-A-RT	AKKL-2140-19	AKKL-2140-A-RT-19	.215-.258 (5.5-6.5)	.85 (21.6)	.650 (16.5)	.708 (18)	.39 (10)	1/32 (0.8) Thick Acrylic Adhesive, RMS-136
AKKL-3140-01	AKKL-3140-A-RT	AKKL-3140-19	AKKL-3140-A-RT-19	.312-.406 (7.9-10.3)	1.0 (25.4)	.750 (19.1)	.866 (22)	.40 (10.2)	1/32 (0.8) Thick Acrylic Adhesive, RMS-15
AKKL-4756-01	AKKL-4756-A-RT	AKKL-4756-19	AKKL-4756-A-RT-19	.469-.562 (11.9-14.3)	1.25 (31.8)		1.09 (27.7)		
AKKL-5775-01	AKKL-5775-A-RT	AKKL-5775-19	AKKL-5775-A-RT-19	.578-.750 (14.7-19.1)	1.50 (38.1)		1.25 (31.8)	.50 (12.7)	
AKKL-8710-01	AKKL-8710-A-RT	AKKL-8710-19	AKKL-8710-A-RT-19	.875-1.00 (22.2-25.4)	2.0 (50.8)	1.00 (25.4)	1.75 (44.5)		
AKKL-10112-01	AKKL-10112-A-RT	AKKL-10112-19	AKKL-10112-A-RT-19	1.00-1.25 (25.4-31.7)	2.5 (63.5)		2.00 (50.8)		1/16 (0.6) Thick Acrylic Adhesive, RMS-15

AKKSL
Adjustable Side Locking Clip on Base

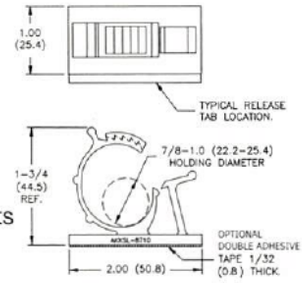

• UL #E71558

Features
- Side lock prevents the clip from sliding open

Material: Nylon 6/6, RMS-01* • Adhesive Back: RMS-15 Color: Natural	
Part No.	Standard Pack: 100 per bag
	Description
AKKSL-8710A-RT	W/ Adhesive Tape
AKKSL-8710-01	Without Tape
*UL94 V0 Nylon, RMS-19 available by special order.	

KKLE-13M-01A-RT
Locking Kwik Klip on Adhesive Base

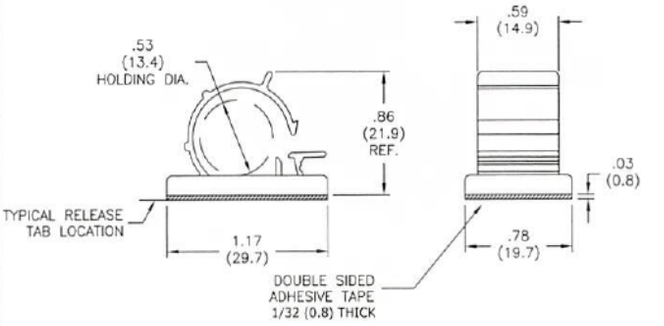

Material: Nylon 6/6, RMS-01* Adhesive Back: Acrylic, RMS-93 Color: Natural
Standard Pack: 500 per bag
*UL94 V0 Nylon, RMS-19 available. To order replace the -01 with -19.

KKL
L Style Locking Clamp on Adhesive Base

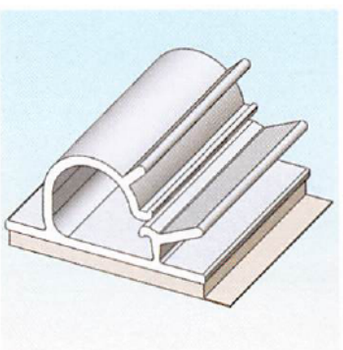

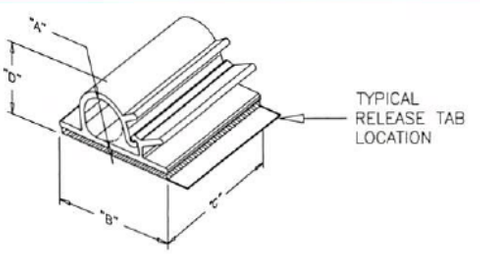

Fig. 1

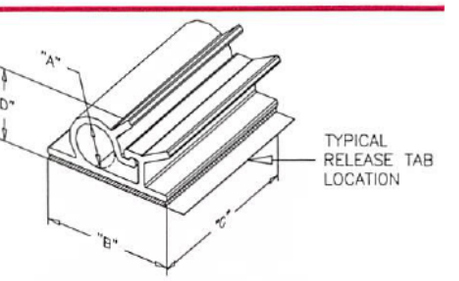

Fig. 2

Material: PVC, RMS-04* • Adhesive Back, 1/16 (1.6) thick, RMS-15 • Color: Grey						
Part No.	Holding Capacity "A"	"B" ±.015 (0.4)	"C" ±.02 (0.5)	"D" At Max Capacity Ref.	Fig.	Standard Pack
KKL-4-RT	1/4 (6.4)	3/4 (19.1)	3/4 (19.1)	9/16 (14.3)	1	500
KKL-8-RT	1/2 (12.7)	1 (25.4)	1 (25.4)	27/32 (21.4)	2	100
KKL-12-RT	3/4 (19.1)			1 (25.4)		
*Also available in clear PVC, RMS-32 by special order.						
Custom lengths available by special order.						

800-621-1892
Angic Global Solutions 1-888-872-0690
https://www.AngicGlobal.com Sales@AngicGlobal.com
Get quote

KKC
C Style Clamp on Adhesive Base

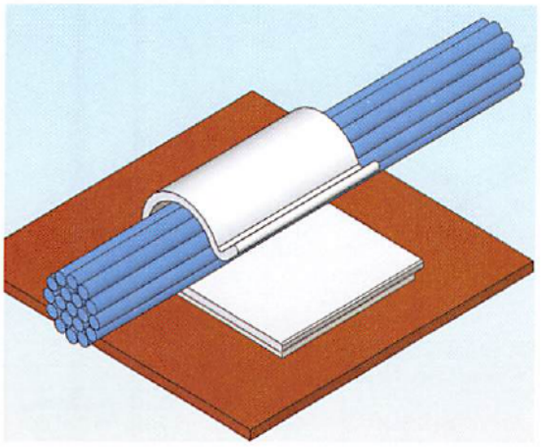

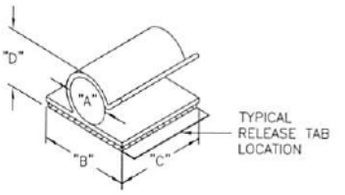

Material: PVC, RMS-04* • Adhesive Back, 1/16 (1.6) thick, RMS-15 Color: Grey					
Part No.	Holding Capacity "A"	"B" ±.015 (0.4)	"C" ±.02 (0.5)	"D" At Max Capacity Ref.	Standard Pack
KKC-2-RT	1/8 (3.2)	3/4 (19.1)	3/4 (19.1)	.31 (7.9)	500
KKC-3-RT	3/16 (4.8)			.33 (8.4)	
KKC-4-RT	1/4 (6.4)			.42 (10.7)	
KKC-5-RT	5/16 (7.9)			.48 (12.2)	
KKC-6-RT	3/8 (9.5)			.60 (15.2)	
KKC-8-RT	1/2 (12.7)	1 (25.4)	1 (25.4)	.69 (17.5)	100
KKC-12-RT	3/4 (19.1)			.94 (23.9)	
*Also available in clear PVC, RMS-32 by special order.					
Custom lengths available by special order.					

WCK/MWCK
Wire Cord Klip

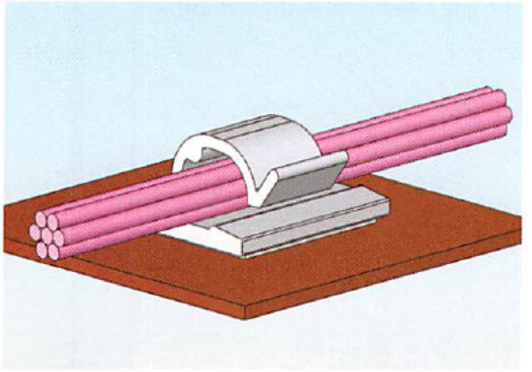

• UL #E71558
Does not apply to the WCK-720 and MWCK-460 style

Mat'l: Nylon 6/6, RMS-01* Color: Natural		
Standard Pack: 1000 per bag		
Part No.	Fig	Mounting Method
WCK-180-01	1	No Adhesive
WCK-180-01A-RT		Acrylic Adhesive, RMS-15
WCK-720-01	2	No Adhesive
WCK-720-01A-RT		Acrylic Adhesive, RMS-15
WCK-460-01	3	No Adhesive
WCK-460-01A-RT		Acrylic Adhesive, RMS-15
MWCK-460-01A-RT	4	Acrylic Adhesive, RMS-24
*Parts are available in UL94 V0 material. To order, replace -01 with -19.		

Features
- Multiple sizes for different cable bundles

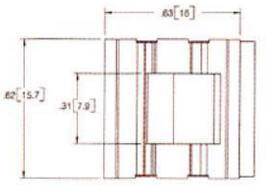

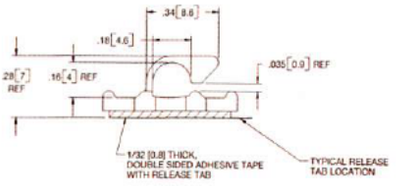

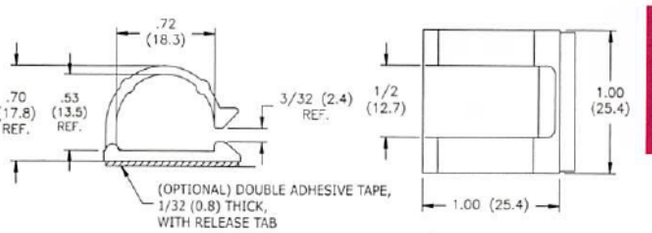

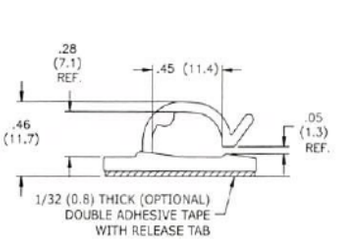

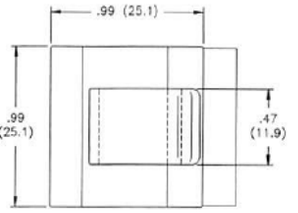

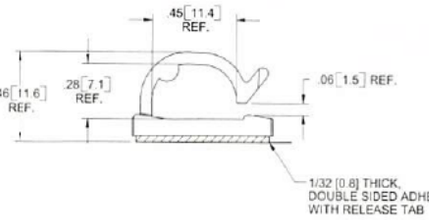

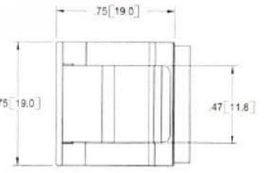

ANGIC
Get quote
Angic Global Solutions 1-888-872-0690
https://www.AngicGlobal.com Sales@AngicGlobal.com

KKR

R Style Clamp on Adhesive Base

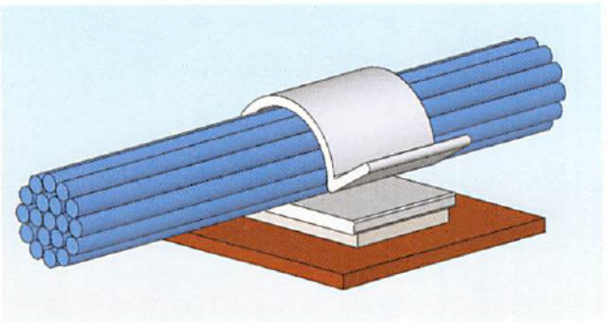

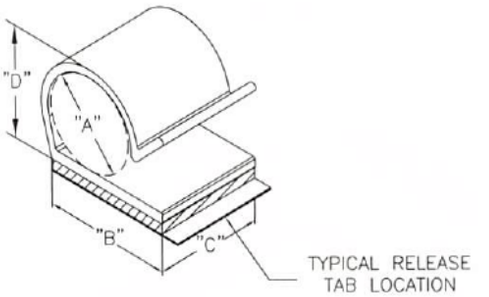

Material: Rigid PVC, RMS-04* • Color: Grey					
Part No.	Standard Pack: 500 per bag				
	Holding Capacity "A"	"B" ±.020 (0.5)	"C" ±.020 (0.5)	"D" at Max. Capacity Ref.	Double Sided Adhesive Tape 1/16 (1.6) thick
KKR-5A1-RT	.521 (13.2)	.750 (19.1)	.625 (15.9)	.680 (17.3)	Rubber, RMS-102
*Also available in clear PVC, RMS-32 by special order.					
Custom lengths available by special order.					

MKKJ

Mini J Style Clamp on Adhesive Base

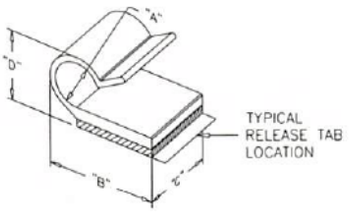

Material: Rigid PVC, RMS-32 • Adhesive Back, 1/32 (0.8) thick, RMS-15 Color: Clear				
Part No.	Standard Pack: 1,000 per bag			
	Holding Capacity "A"	"B" ±.015 (0.4)	"C" ±.02 (0.5)	"D" At Max Capacity Ref.
MKKJ-2-RT	1/8 (3.2)	7/16 (11.1)	3/8 (9.5)	15/64 (6)
MKKJ-3-RT	3/16 (4.8)	5/8 (15.9)	7/16 (11.1)	21/64 (8.3)
MKKJ-4-RT	1/4 (6.4)	21/32 (16.7)	1/2 (12.7)	13/32 (10.3)
MKKJ-5-RT	5/16 (7.9)	13/16 (20.6)	9/16 (14.3)	31/64 (12.3)
MKKJ-6-RT	3/8 (9.5)	7/8 (22.2)	5/8 (15.9)	9/16 (14.3)
Custom lengths available by special order.				

KKJ

J Style Clamp on Adhesive Base

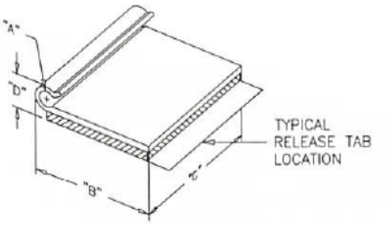

Mat'l: PVC, RMS-04* Adhesive Back, 1/16 (1.6) thick, RMS-15 Color: Grey				Standard Pack: 500 per bag
Part No.	Holding Capacity "A"	B ± .015 (0.4)	C ± .02 (0.5)	"D" At Max Capacity Ref
KKJ-3-RT	3/16 (4.8)	7/8 (22.2)	2.984 (75.8)	.984 (25)
KKJ-4-RT	1/4 (6.4)	29/32 (23)		
*Also available in clear PVC, RMS-32 by special order				
Custom lengths available by special order.				

KKF

F Style Clamp on Adhesive Base

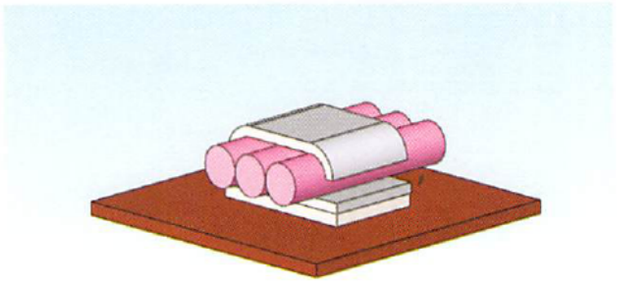

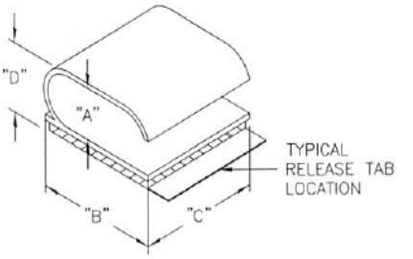

Material: PVC, RMS-04* • Adhesive Back , 1/16 (1.6) thick, RMS-15 Color: Grey				
Part No.	Standard Pack: 100 per bag			
	Holding Capacity "A"	"B" ±.030 (0.8)	"C" ±.02 (0.5)	"D" At Max Capacity Ref.
KKF-10X4-RT	9/16 x 13/64 (14.3 x 5.2)	3/4 (19.1)	3/4 (19.1)	23/64 (9.1)
*Also available in clear PVC, RMS-32 by special order.				
Custom lengths available by special order.				

Features

- Designed to hold 3 wire cords, e.g. air conditioner leads

-800-621-1892
Get quote
Angic Global Solutions 1-888-872-0690
https://www.AngicGlobal.com Sales@AngicGlobal.com

KKDL
DL Style Clamp on Adhesive Base

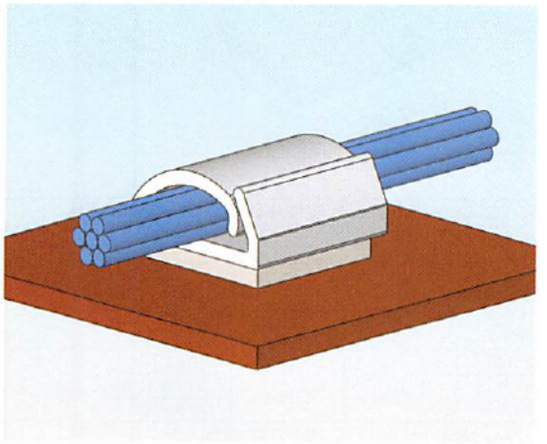

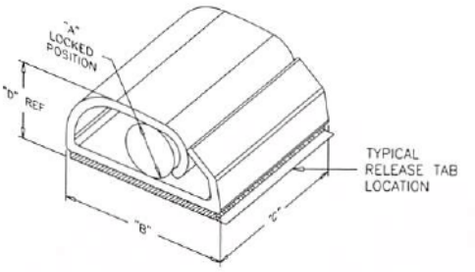

Material: PVC, RMS-04* • Adhesive Back, 1/16 (1.6) thick, RMS-15 Color: Grey					
Part No.	Holding Capacity "A"	"B" ±.015 (0.4)	"C" ±.02 (0.5)	"D" At Max Capacity Ref.	Standard Pack per bag
KKDL-4-RT	1/8 (3.2)	1/2 (12.7)	1/2 (12.7)	.28 (7.1)	500
KKDL-8-RT	7/32 (5.6)	3/4 (19.1)	3/4 (19.1)	.43 (10.9)	100
*Also available in clear PVC, RMS-32 by special order.					
Custom lengths available by special order.					

KKD
D Style Clamp on Adhesive Base

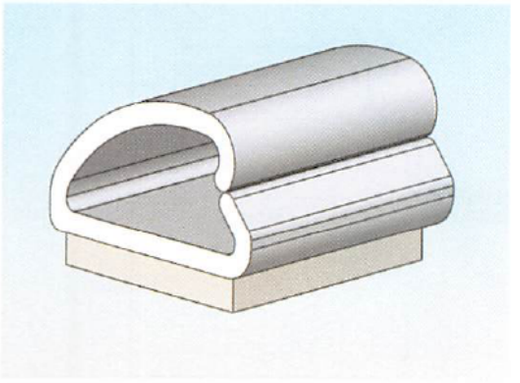

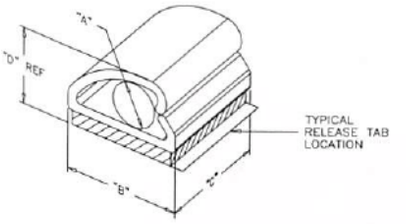

Material: PVC, RMS-04* • Adhesive Back, 1/16 (1.6) thick, RMS-15 Color: Grey					
Part No.	Holding Capacity "A"	"B" ±.02 (0.5)	"C" ±.02 (0.5)	"D" At Max Capacity Ref.	Standard Pack
KKD-4-RT	1/4 (6.4)	1/2 (12.7)	1/2 (12.7)	.40 (10.2)	500
KKD-8-RT	1/2 (12.7)	3/4 (19.1)	3/4 (19.1)	.73 (18.5)	100
KKD-12-RT	3/4 (19.1)	1 - 1/8 (28.6)	1 (25.4)	1.02 (25.9)	
KKD-16-RT	1 (25.4)	1 - 1/2 (38.1)	1 - 1/4 (31.8)	1.30 (33)	
*Also available in clear PVC, RMS-32 by special order.					
Custom lengths available by special order.					

UMS
Universal Mounting Strap

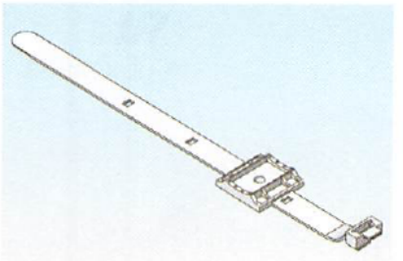

Richco Rivet No.	Panel Thickness Range
SR-5045	Up to .018 (0.5)
SR-5055	.018-.058 (0.5-1.5)
SR-5065	.058-.097 (1.5-2.5)
SR-5075	.097-.137 (2.5-3.5)
SR-5085	.137-.176 (3.5-4.5)
SR-5095	.176-.215 (4.5-5.5)
SR-5105	.215-.255 (5.5-6.5)
See Page 52	

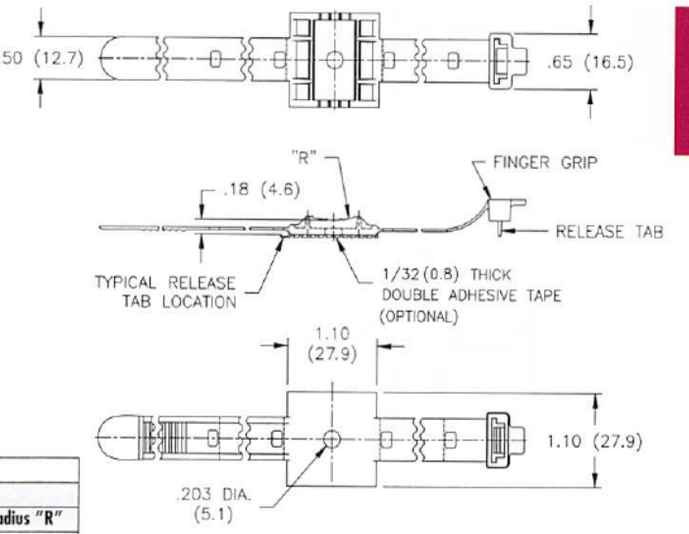

Features

- Can be mounted with a #6 or M4 screw, rivet (see chart) or optional double-backed adhesive tape

Material: Nylon 6/6, RMS-45 • Color: Black				
Part No. W/O Tape	Part No. W/ Tape	Standard Pack: 100		
		Maximum Bundle Dia.	Min. Loop Tensile Strength lb(kg)	Radius "R"
UMS-16-45	UMS-16-45A-RT	1 (25.4)	50 (22.68)	1/2 (12.7)
UMS-24-45	UMS-24-45A-RT	1 - 1/2 (38.1)		3/4 (19.1)
UMS-32-45	UMS-32-45A-RT	2 (50.8)		1 (25.4)
Acrylic Adhesive Tape, RMS-15				

ANGIC Get quote
Angic Global Solutions 1-888-872-0690
https://www.AngicGlobal.com Sales@AngicGlobal.com

KKU
U Style Clamp on Adhesive Base

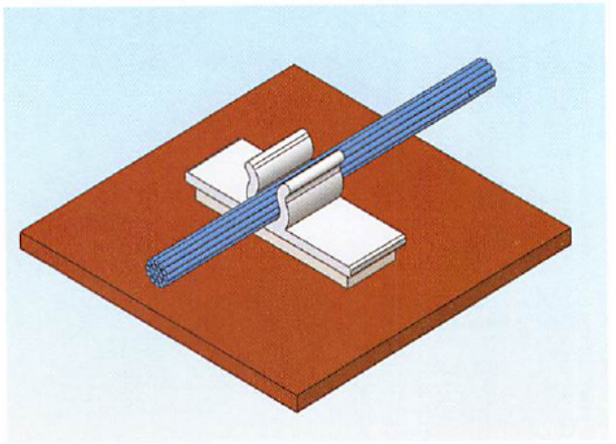

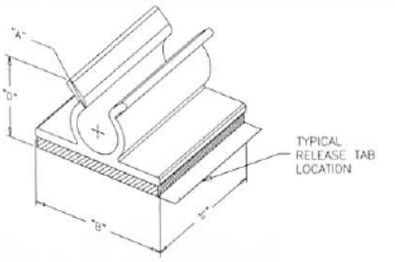

Material: PVC, RMS-04* • Adhesive Back, 1/16 (1.6) thick, RMS-15 Color: Grey					
Part No.	Holding Capacity "A"	"B" ±.015 (0.4)	"C" ±.02 (0.5)	"D" At Max Capacity Ref.	Standard Pack
KKU-2-RT	1/8 (3.2)	3/4 (19.1)	3/4 (19.1)	9/32 (7.1)	500
KKU-4-RT	1/4 (6.4)			15/32 (11.9)	
KKU-6-RT	3/8 (9.5)			19/32 (15.1)	
KKU-8-RT	1/2 (12.7)	1 (25.4)	1 (25.4)	11/16 (17.5)	100
KKU-9-RT	9/16 (14.3)			3/4 (19.1)	
KKU-12-RT	3/4 (19.1)			29/32 (23)	
*Also available in clear PVC, RMS-32 by special order.					
Custom lengths available by special order.					

KCK-4-RT
Kwik Corner Klip on Adhesive Base

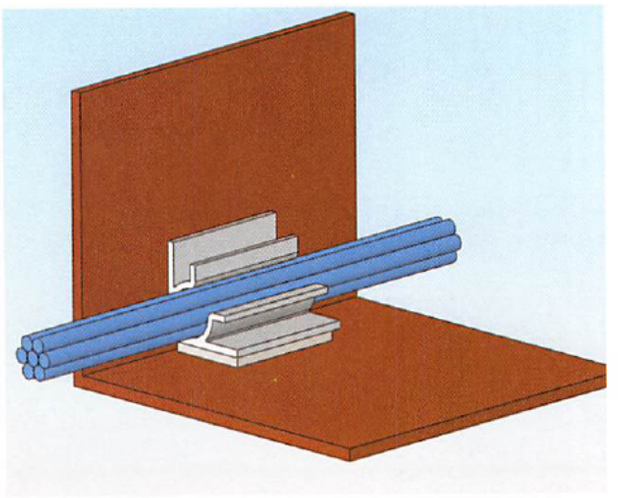

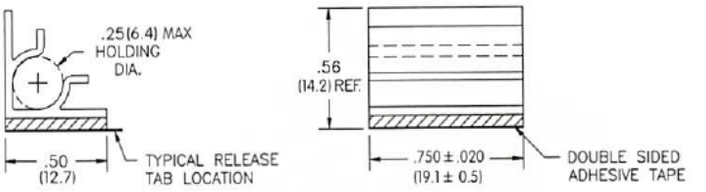

Features

- Designed to route cables along a 90° angled surface

Material: PVC, RMS-04*; Adhesive Back, 1/16 (1.6) thick, RMS-15 • Color: Grey
Standard Pack: 1,000 per bag
*Also available in clear PVC, RMS-32 by special order.
Custom lengths available by special order.

I

WCB
Cord Clip on Base

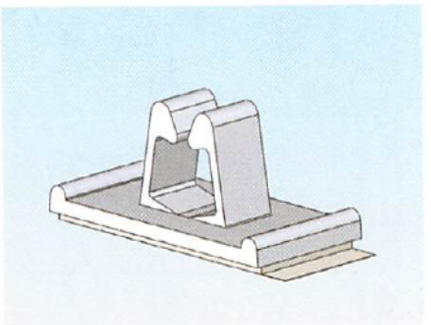

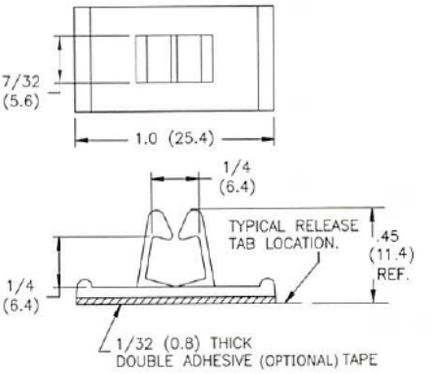

- UL #E71558

Part No.	Base Material	Adhesive Material	Color	Standard Pack
WCB-250-01A-RT	Nylon 6/6, RMS-01*	Acrylic, RMS-15	Natural	1,000
WCB-250-01		No Adhesive		
*Available in UL94 V0 material by special order only. To order, replace -01 with -19.				

-800-621-1892
Get quote
Angic Global Solutions 1-888-872-0690
https://www.AngicGlobal.com Sales@AngicGlobal.com

UC
U-Clip with Adhesive Base

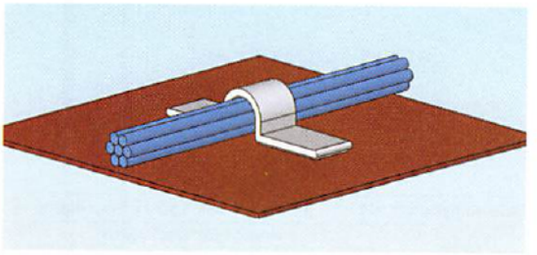

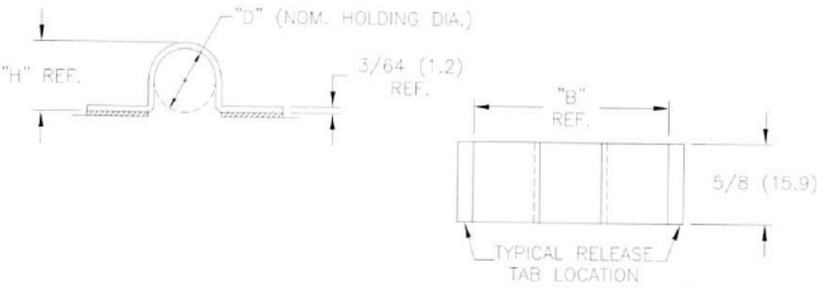

Features
- Attach clamp over wire bundle to lock it in place

Material: PVC, RMS-04* • Adhesive Back 1/32 (0.8): RMS-15 • Color: Black			
Part No.	Standard Pack: 1,000 per bag		
	"D" Bundle Dia.	"B"	"H"
UC-2-RT	1/8 (3.2)	1 - 7/32 (30.9)	11/64 (4.4)
UC-4-RT	1/4 (6.4)	1 - 11/32 (34.1)	19/64 (7.5)
UC-6-RT	3/8 (9.5)	1 - 15/32 (37.3)	27/64 (10.7)
UC-8-RT	1/2 (12.7)	1 - 19/32 (40.4)	35/64 (13.9)
*Also available in clear PVC, RMS-32 by special order.			
Custom lengths available by special order.			

HUC
Half U-Clip with Adhesive Base

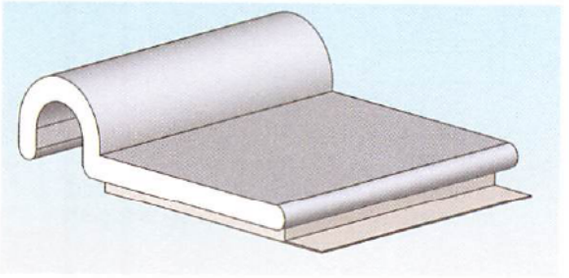

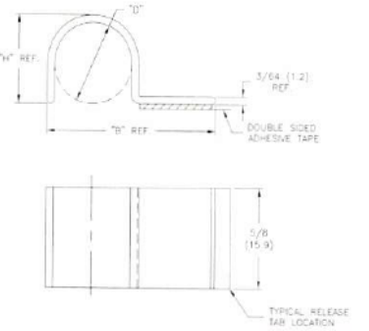

Material: PVC, RMS-04* • Adhesive Back 1/32 (0.8): RMS-15 • Color: Black			
Part No.	Standard Pack: 1,000 per bag		
	"D" Bundle Dia.	"B"	"H"
HUC-2-RT	1/8 (3.2)	23/32 (18.3)	11/64 (4.4)
HUC-4-RT	1/4 (6.4)	27/32 (21.4)	19/64 (7.5)
HUC-6-RT	3/8 (9.5)	31/32 (24.6)	27/64 (10.7)
*Also available in clear PVC, RMS-32 by special order.			
Custom lengths available by special order.			

SHKBS
Stand-Off Harness Clip on Adhesive Base

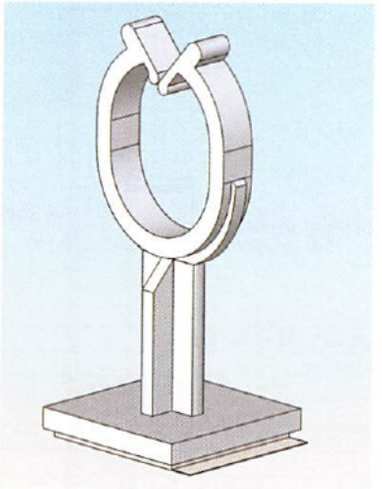

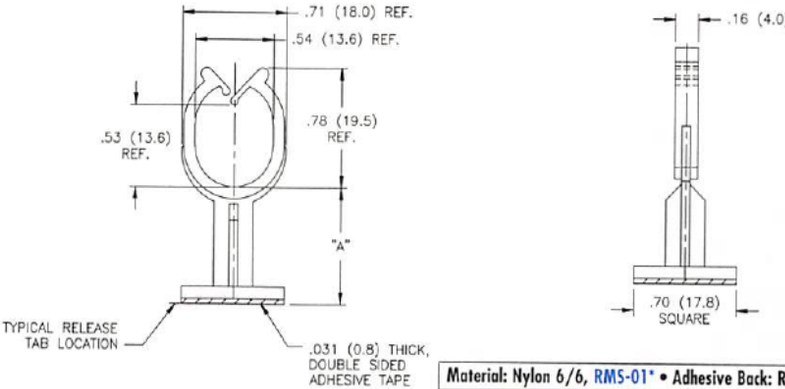

Features
- Cables are slid into the top of the clamp to hold them in place

Material: Nylon 6/6, RMS-01* • Adhesive Back: RMS-15 • Color: Natural	
Part No.	Standard Pack: 1,000 per bag
	"A"
SHKBS-4-01A-RT	.25 (6.4)
SHKBS-8-01A-RT	.50 (12.7)
SHKBS-12-01A-RT	.75 (19.1)
SHKBS-16-01A-RT	1.00 (25.4)
*UL94 V0 Nylon, RMS-19 available by special order. To order, replace -01 with -19.	

39-4060 Samp
Get quote
Angic Global Solutions 1-888-872-0690
https://www.AngicGlobal.com Sales@AngicGlobal.com

KLBS
Kurly Lock on Adhesive Base with Stand-Off

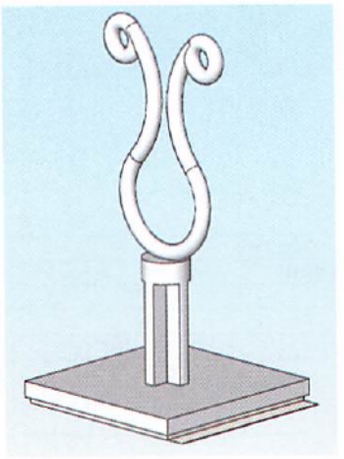

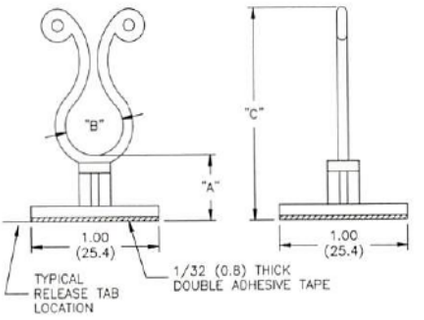

• UL #E71558

Features
- Spaces wire bundles above the chassis

Material: Nylon 6/6, RMS-01* • Adhesive Back: RMS-15 Color: Natural			
Part No.	Standard Pack: 1,000 per bag		
	Height "A"	"C" Ref.	"B" Bundle Dia.
KLBS-350-4-01A-RT	1/4 (6.4)	1 - 9/32 (32.5)	.30 - .40 (7.6 - 10.2)
KLBS-350-8-01A-RT	1/2 (12.7)	1 - 17/32 (38.9)	
KLBS-350-12-01A-RT	3/4 (19.1)	1 - 25/32 (45.2)	
KLBS-350-16-01A-RT	1 (25.4)	2 - 1/32 (51.6)	
KLBS-450-4-01A-RT	1/4 (6.4)	1 - 15/32 (37.3)	.40 - .50 (10.2 - 12.7)
KLBS-450-8-01A-RT	1/2 (12.7)	1 - 23/32 (43.7)	
KLBS-450-12-01A-RT	3/4 (19.1)	1 - 31/32 (50)	
KLBS-450-16-01A-RT	1 (25.4)	2 - 7/32 (56.4)	
*UL94 V0 Nylon, RMS-19 available. To order, replace -01 with -19.			

KLB
Kurly Lock on Adhesive Base

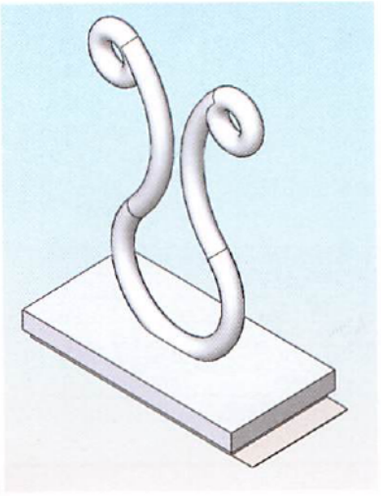

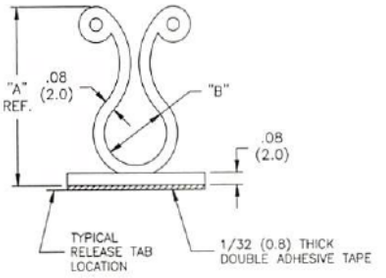

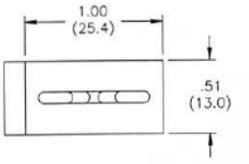

• UL #E71558

Features
- Bundles are easily locked into place and removed by twisting the top ends together

Material: Nylon 6/6, RMS-01* • Adhesive Back: RMS-15 Color: Natural		
Part No.	Standard Pack: 1,000 per bag	
	"A" Ref	"B" Bundle Dia Range
KLB-350A-RT	1.07 (27.2)	.30 - .40 (7.6 - 10.2)
KLB-450A-RT	1.23 (31.2)	.40 - .50 (10.2 - 12.7)
KLB-750A-RT	1.58 (40.1)	.70 - .80 (17.8 - 20.3)
*UL94 V0 Nylon, RMS-19 available. To order, add -19 to the end of the part no.		
Available without adhesive - To order, remove A-RT.		

TLFB
Twist Lock on Flexible Adhesive Base

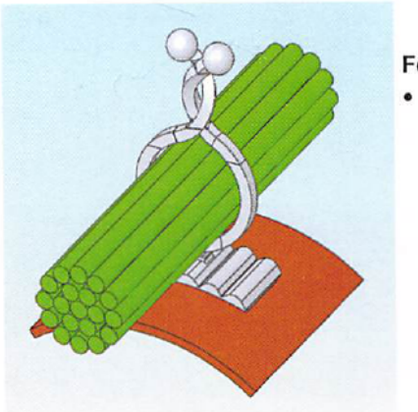

Features
- Flexible adhesive base can be mounted onto contoured surfaces

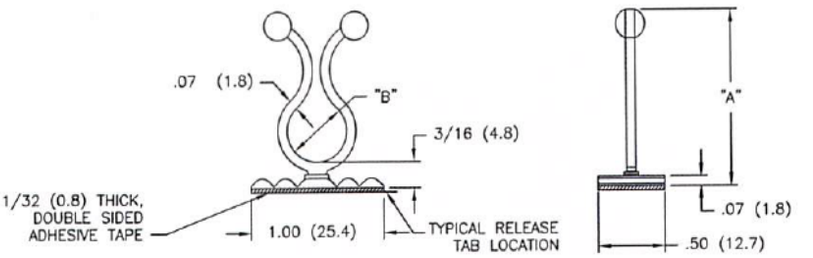

Mat'l: Nylon 6/6, RMS-01*; Adhesive back, RMS-102 • Color: Natural		
Standard Pack: 1,000 per bag		
Part No.	"A" Ref.	"B" Bundle Dia.
TLFB-350-01A1-RT	1.15 (29.3)	.30-.40 (7.6-10.2)
TLFB-450-01A1-RT	1.27 (32.3)	.40-.50 (10.2-12.7)
TLFB-750-01A1-RT	1.61 (40.9)	.70-.80 (17.8-20.3)
*UL94 V0 Nylon, RMS-19 available by special order. To order replace the -01 with -19		

-800-621-1892
Get quote
Angic Global Solutions 1-888-872-0690
https://www.AngicGlobal.com Sales@AngicGlobal.com

PCC

Steel Clamp with Vinyl Coating, Adhesive Base

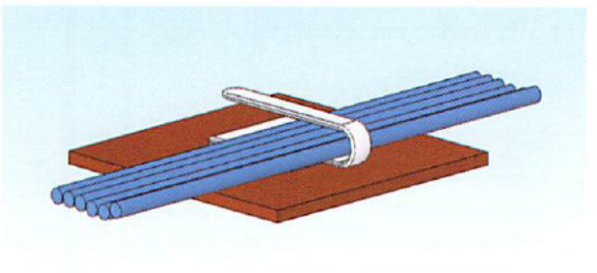

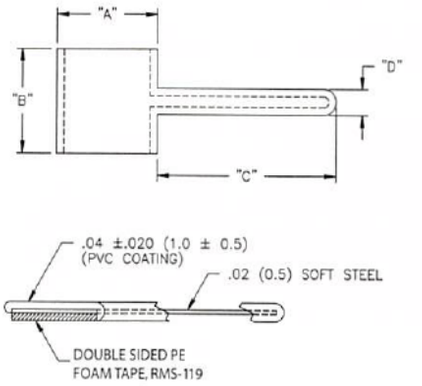

Features

- PVC coating protects and insulates wires and components
- Flexible arm holds flat, round or oddly shaped components

Material: PVC Coating, RMS-118, on Soft Steel, RMS-203 • Color: White					
Part No.	"A" Ref.	"B" ±.020 (0.5)	"C" Ref.	"D" Ref.	Standard Pack
PCC-5	.31 (7.9)	.31 (7.9)	.59 (15)	.08 (2)	1,000
PCC-9	.55 (14)	.55 (14)	.98 (24.9)	.14 (3.6)	500
PCC-12	.75 (19.1)	.75 (19.1)	1.58 (40.1)	.16 (4.1)	

PFC

Plastic Coated Aluminum Clamp, Foam Coated, Adhesive Base

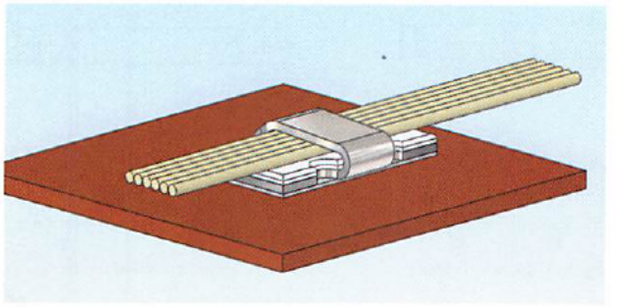

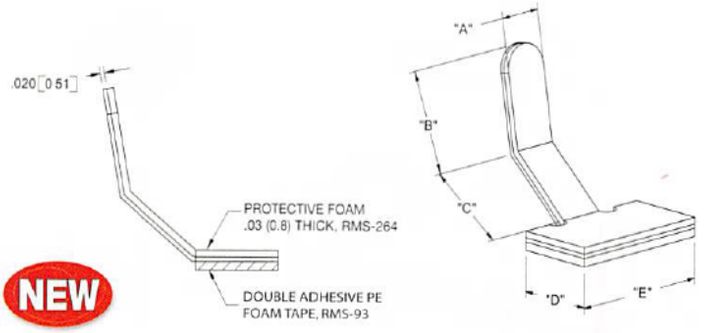

NEW

Features

- Foam on the inside of clamp protects cables and fibers

Material: Aluminum, RMS-194					
Part No.	"A" Ref.	"B" Ref.	"C" Ref.	"D"	"E"
PFC-25M	.189 (4.8)	.494 (12.55)	.437 (11.1)	.40 (10.1)	.75 (19.1)
PFC-50M	.205 (5.2)	.573 (14.55)	.555 (14.1)	.55 (14.1)	.98 (25)

ASK

Aluminum Clamp on Adhesive Base

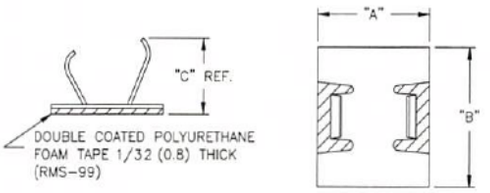

Material: Aluminum, RMS-194; Bright Finish • Color: Silver				
Part No.	Standard Pack: 250 per box			
	"A"	"B"	"C"	Max Bundle Dia.
ASK-3	.44 (11.3)	.66 (16.8)	3/8 (9.5)	15/64 (6)
ASK-6	.62 (15.7)	.74 (18.8)	9/16 (14.3)	3/8 (9.5)

RAK

Aluminum Clamp on Adhesive Base

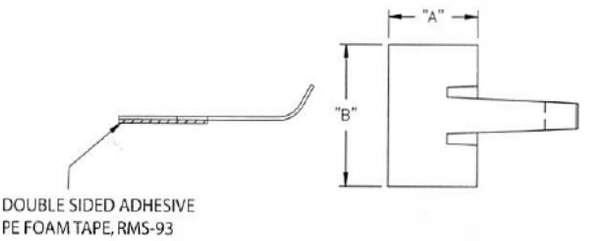

Material: Aluminum, RMS-194; Bright Finish Color: Silver			
Part No.	Standard Pack: 250 per box		
	"A"	"B"	Max Bundle Dia.
RAK-1	.44 (11.2)	.67 (17)	.23 (5.8)
RAK-2	.64 (16.3)	.76 (19.3)	.38 (9.7)

I

ANGIC
Get quote
Angic Global Solutions 1-888-872-0690
https://www.AngicGlobal.com Sales@AngicGlobal.com

FCW
Cable Clamp on Adhesive Base

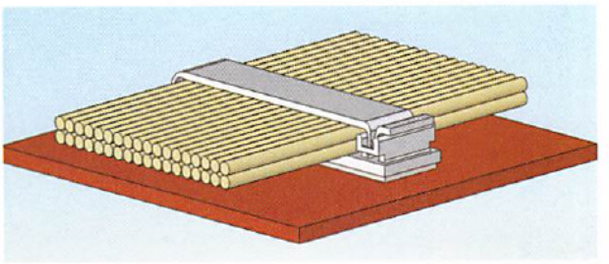

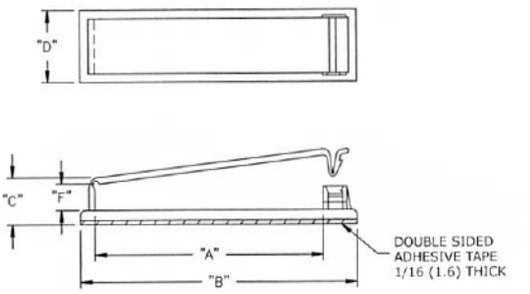

Features
- Holds cables up to 50 conductors wide

Material: Nylon 6/6, RMS-01* • Double Adhesive Back, RMS-92 Color: Natural						
Part No.	Standard Pack: 100 per bag					
	Max No. of Conductors	"A"±.02 (0.5)	"B"±.04 (1)	"C"±.02 (0.5)	"D"±.04 (1)	"F"
FCW-29-01	30	1.24 (31.5)	1.79 (45.5)	.46 (11.7)	.75 (19.1)	.22 (5.6)
FCW-30-01		1.26 (32)	1.80 (45.7)	.51 (13)	.76 (19.3)	.28 (7.1)
FCW-40-01	40	1.56 (39.6)	2.11 (53.6)			
FCW-50-01	50	2.52 (64)	3.05 (77.5)			.26 (6.6)
FCW-50H-01		2.54 (64.5)	3.09 (78.5)	.76 (19.2)	.75 (19.1)	.51 (13)
*UL94 V0 Nylon, RMS-19 available by special order only. To order, replace -01 with-19.						

FCCA
Flat Cable Clamp, Arrowhead Mounted

NEW

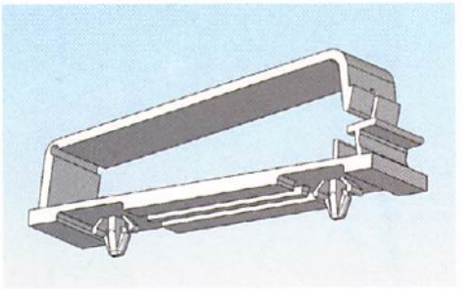

FCCA-30A-01

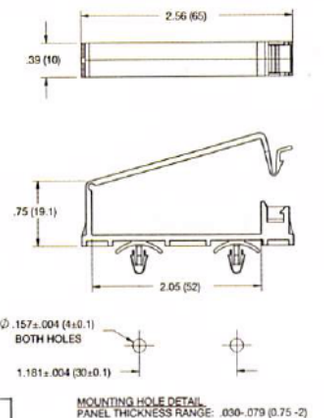

FCCA-40A-01

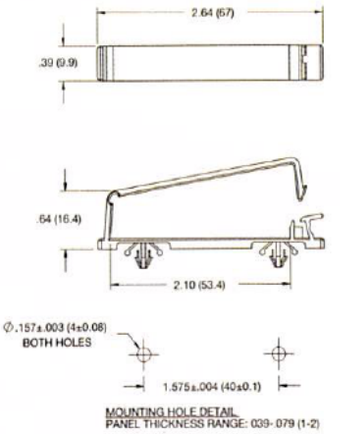

Material: Nylon 6/6, RMS-01* Color: Natural
Standard Pack: 100 per bag
*UL94 V0 Nylon, RMS-19 available by special order. To order, add -19 to the end of the part no.

I

FCCB
Cable Clamp, Arrowhead Mounted

NEW

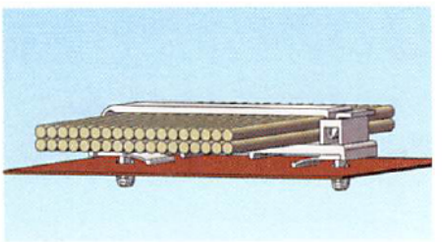

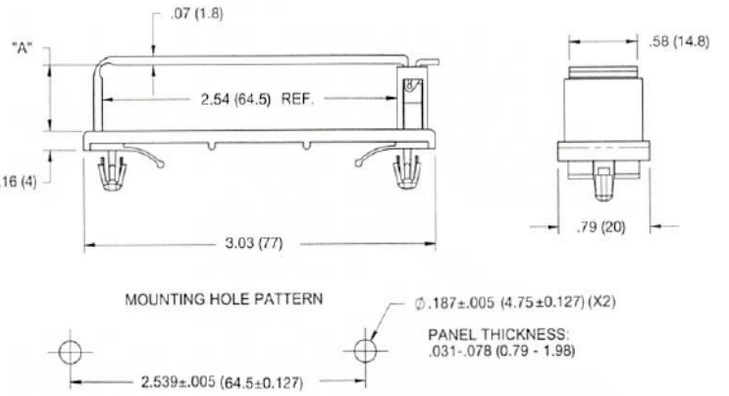

Mat'l: Nylon 6/6, RMS-01 Color: Natural	
Part No.	Standard Pack: 100 per bag
	"A" Ref
FCCB-1	.28 (7.2)
FCCB-2	.54 (13.7)

-800-621-1892
Get quote
Angic Global Solutions 1-888-872-0690
https://www.AngicGlobal.com Sales@AngicGlobal.com

RDAFCC
Flat Cable Clamps

NEW

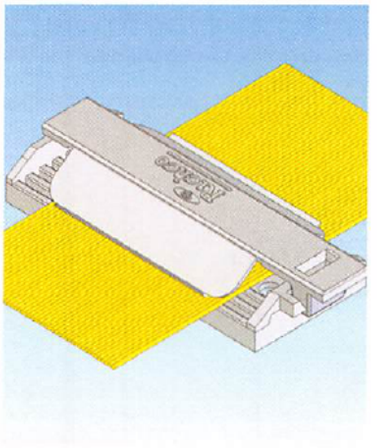

RDAFCC-50 and -82

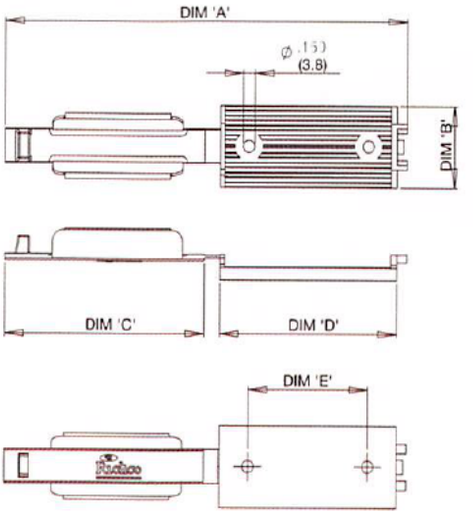

RDAFCC-25

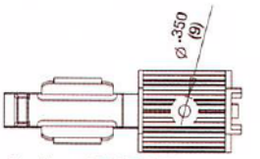

Plan View of RDAFCC-25
showing single fixing hole location.

Features

- Mounts with either adhesive or screw
- Holds flat cable firmly in place
- Recommended Max cable thickness: 5MM

Mat'l: Nylon 6/6, RMS-01* Optional Double Adhesive Back, RMS-324 Color: Grey				Standard Pack: 100 per bag			
Part No.	Maximum Cable Width	Mounting Method	"A" Ref	"B" Ref	"C" Ref	"D" Ref	"E"
RDAFCC-25	1 (25.4)	#6 or M3 Screw	2.984 (75.8)	.984 (25)	1.492 (37.9)	1.169 (29.7)	NA
RDAFCC-25A		Adhesive					
RDAFCC-50	2 (50.8)	#6 or M3 Screw	5.059 (128.5)	.984 (25)	2.5 (63.5)	2.224 (56.5)	1.496 (38)
RDAFCC-50A		Adhesive					
RDAFCC-82	3 (76.2)	#6 or M3 Screw	7.062 (179.4)	1 (25.4)	3.484 (88.5)	3.259 (82.8)	
RDAFCC-82A		Adhesive					
*Available in UL94 V0 material by special order only. To order, replace -01 with -19.							

HFCC
Hinged Cable Clamp, Self Mounting

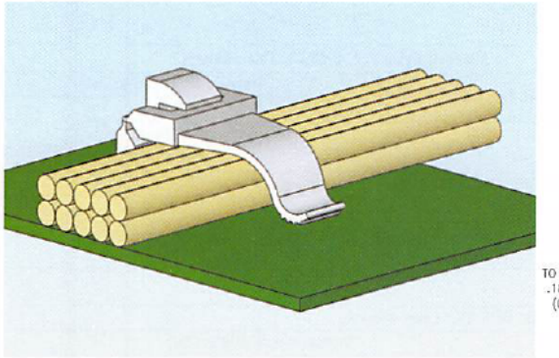

HFCC-A-8-01

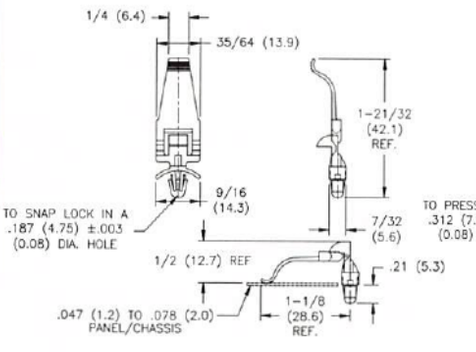

HFCC-BH-8-01

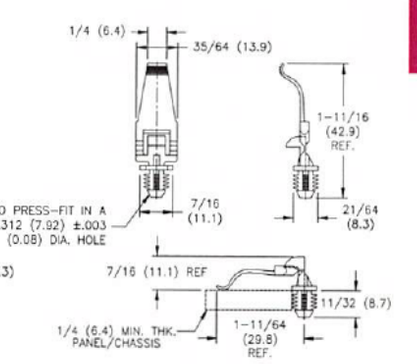

Features

- Hinged design allows cables to be oriented prior to closure

Material: Nylon 6/6, RMS-01* Color: Natural
Standard Pack: 1,000 per bag
*HFCC-A-8-01 available in UL94V0 by special order. To order, replace -01 with -19

539-4060 Sam
Get quote
Angic Global Solutions 1-888-872-0690
https://www.AngicGlobal.com Sales@AngicGlobal.com

FCRC/FCRCS/FCRCSH
Flat Cable Routing Clamp

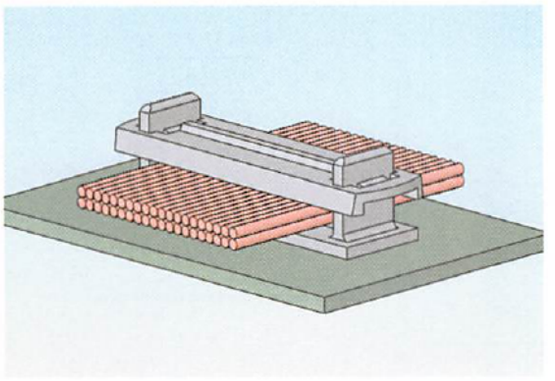

Features

- Two part design with clamp base and tension-locking cover
- For strain relief applications, double back the cable over the cover and secure with a second cover
- Base secures with a screw, rivet or adhesive backing

FCRC

Flat Cable Clamp Base

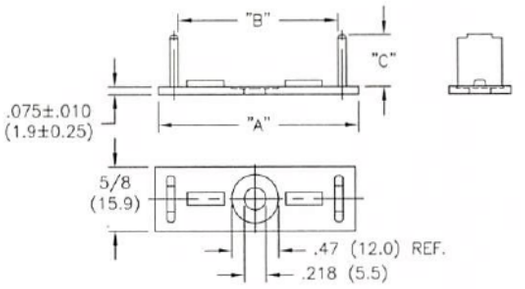

Optional Double Adhesive Tape with Release Tab, 1/32 (0.8) thick

FCRCS

Serrated Adhesive Mount Flat Cable Clamp Base



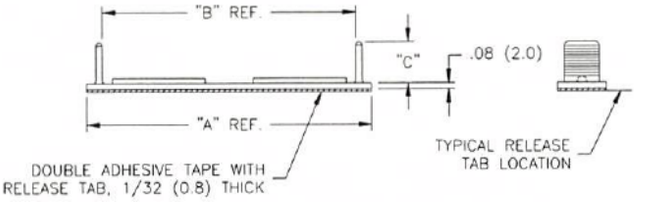

FCRCSH

Serrated Flat Cable Clamp Base

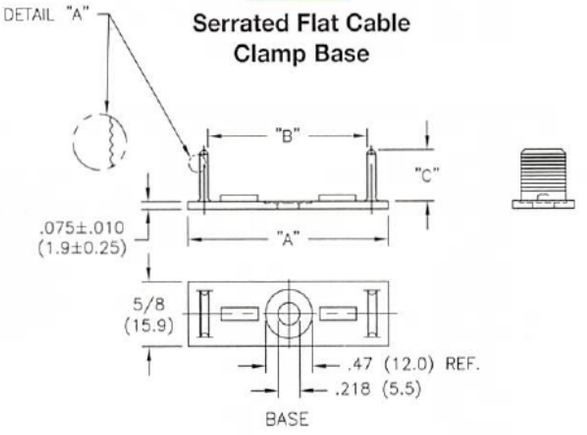

Optional Double Adhesive Tape with Release Tab, 1/32 (0.8) thick

FCRC-C

Flat Cable Clamp Cover

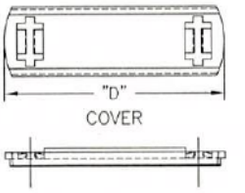

Material: Nylon 6/6, RMS-01* Color: Natural	
Cover Part No.	Standard Pack: 100 per bag "D" Ref.
FCRC-13C	2.24 (56.9)
FCRC-19C	2.92 (74.2)
FCRC-21C	3.17 (80.5)
FCRC-26C	3.86 (98)
*UL94 V0 Nylon, RMS-19 available by special order. To order, add -19 to the end of the part no.	

Material: Nylon 6/6. RMS-01* • Double Adhesive Back, RMS-15 • Color: Natural								
Part No.					Standard Pack: 100 per bag			
W/Out Adhesive	With Adhesive	With Adhesive	W/Out Adhesive	With Adhesive	"A" Ref.	"B" Ref.	"C" ± .015 (0.4)	Use Cover Part No.
FCRC-13B-4	FCRC-13B-4A-RT	FCRCS-13B-4A-RT	FCRCSH-13B-4	FCRCSH-13B-4A-RT	2.04 (51.8)	1.62 (41.1)	1/2 (12.7)	FCRC-13C
FCRC-19B-4	FCRC-19B-4A-RT	FCRCS-19B-4A-RT	FCRCSH-19B-4	FCRCSH-19B-4A-RT	2.72 (69.1)	2.31 (58.7)		FCRC-19C
FCRC-21B-4	FCRC-21B-4A-RT	FCRCS-21B-4A-RT	FCRCSH-21B-4	FCRCSH-21B-4A-RT	2.98 (75.7)	2.55 (64.8)		FCRC-21C
FCRC-26B-4	FCRC-26B-4A-RT	FCRCS-26B-4A-RT	FCRCSH-26B-4	FCRCSH-26B-4A-RT	3.66 (93)	3.24 (82.3)		FCRC-26C
FCRC-13B-6	FCRC-13B-6A-RT	FCRCS-13B-6A-RT	FCRCSH-13B-6	FCRCSH-13B-6A-RT	2.04 (51.8)	1.62 (41.1)	3/4 (19.1)	FCRC-13C
FCRC-19B-6	FCRC-19B-6A-RT	FCRCS-19B-6A-RT	FCRCSH-19B-6	FCRCSH-19B-6A-RT	2.72 (69.1)	2.31 (58.7)		FCRC-19C
FCRC-21B-6	FCRC-21B-6A-RT	FCRCS-21B-6A-RT	FCRCSH-21B-6	FCRCSH-21B-6A-RT	2.98 (75.7)	2.55 (64.8)		FCRC-21C
FCRC-26B-6	FCRC-26B-6A-RT	FCRCS-26B-6A-RT	FCRCSH-26B-6	FCRCSH-26B-6A-RT	3.66 (93)	3.24 (82.3)		FCRC-26C
*UL94 V0 Nylon, RMS-19 available by special order. To order, add -19 to the end of the part no.								

-800-621-1892
Get quote
Angic Global Solutions 1-888-872-0690
https://www.AngicGlobal.com Sales@AngicGlobal.com

EFCWSF

Cable Clamp with Adhesive Base, Silicone Foam in Center

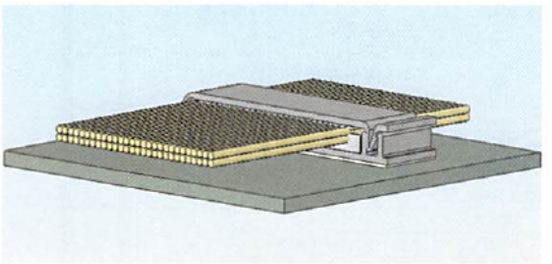

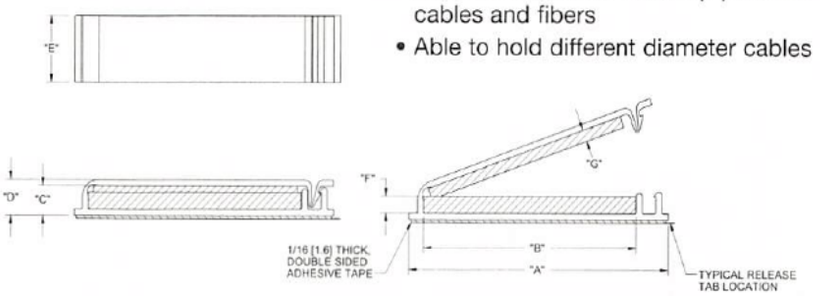

Features

- Foam in the center of clamp protects cables and fibers
- Able to hold different diameter cables

Material: Clip Base - Rigid PVC, RMS-04; Foam - V-0 Silicone, RMS-135; Bottom Adhesive, RMS-15 • Color: Clamp, Natural; Foam, Grey								
Part No. with Rubber Cushion	Standard Pack: 100 per bag							
	Max. No. of Conductors	"A"	"B"	"C" Ref.	"D" Ref.	"E" ± .06 (±1.6)	"F" Ref.	"G" Ref.
EFCWSF-29A-RT	30	1.80 (45.7)	1.26 (32)	.21 (5.3)	.30 (7.6)	.75 (19.1)	.13 (3.3)	.13 (3.2)
EFCWSF-30A-RT				.26 (6.6)	.40 (10.2)			.19 (4.8)
EFCWSF-40A-RT	40	2.05 (52.1)	1.51 (38.4)	.51 (13)				
EFCWSF-50A-RT	50	3.05 (77.5)	2.51 (63.8)					

SF

Silicone Foam

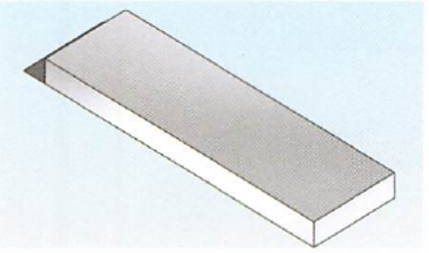

Features

- Can be used inside clamps or as gaskets

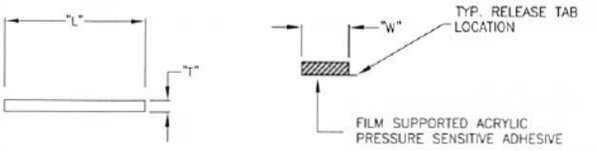

- UL #E57750

SILICONE FOAM ROLLS			
Part No.	"T" ± .015 (0.4)	"L" ± .13 (3.2)	"W" .030 (0.8)
SF2R	.13 (3.2)	180 (4572)	.75 (19.1)
SF3R	.19 (4.8)		

Material: Adhesive Backed UL94 V0 Silicone Foam, RMS-135 • Color: Grey			
Part No.	Standard Pack: 100 per bag		
	"T" ± .015 (0.4)	"L" ± .030 (0.8)	"W" ± .030 (0.8)
SF2-30	.13 (3.3)	1.23 (31.2)	.75 (19.1)
SF2-40		1.53 (38.9)	
SF2-50		2.49 (63.2)	
SF3-30	.19 (4.8)	1.23 (31.2)	
SF3-40		1.53 (38.9)	
SF3-50		2.49 (63.2)	

USAGE CHART		
Silicone Foam is cut to length to fit into the Extruded Flat Cable Clamps		
Part No.	Apply this Part No.	In this Quantity
EFCW-29	SF2-30	2
EFCW-30	SF2-30	1
	SF3-30	1
EFCW-40	SF2-40	1
	SF3-40	1
EFCW-50	SF2-50	1
	SF3-50	1
Install SF2 on bottom and SF3 on top. Exception for EFCW-29 install SF2 on top and bottom.		

EFCW

Cable Clamp on Adhesive Base

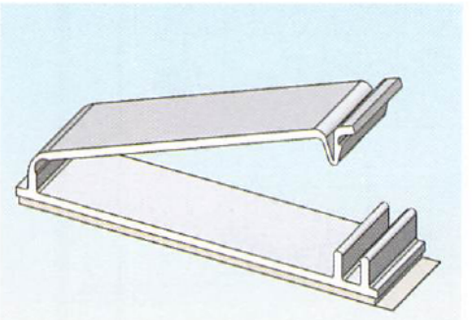

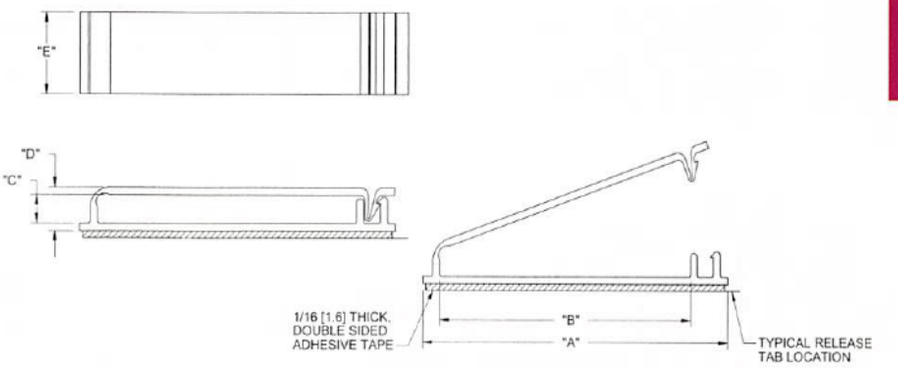

Material: Clip Base - Rigid PVC, RMS-04; Bottom Adhesive 1/16 (1.6) Thick, RMS-15 • Color: Natural						
Part No.	Standard Pack: 100 per bag					
	Max. No. of Conductors	"A"	"B"	"C" Ref.	"D" Ref.	"E" Ref.
EFCW-29A-RT	30	1.80±.025 (45.7)	1.26±.025 (32)	.21 (5.3)	.30 (7.6)	.75±.06 (19.1)
EFCW-30A-RT				.26 (6.6)	.40 (10.2)	
EFCW-40A-RT	40	2.05±.030 (52.1)	1.51±.030 (38.4)	.30 (7.6)		
EFCW-50A-RT	50	3.05±.045 (77.5)	2.51±.045 (63.8)			

539-4060 Sam
Get quote
Angic Global Solutions 1-888-872-0690
https://www.AngicGlobal.com Sales@AngicGlobal.com

AFCC
Aluminum Flat Cable Clamp with Adhesive Base

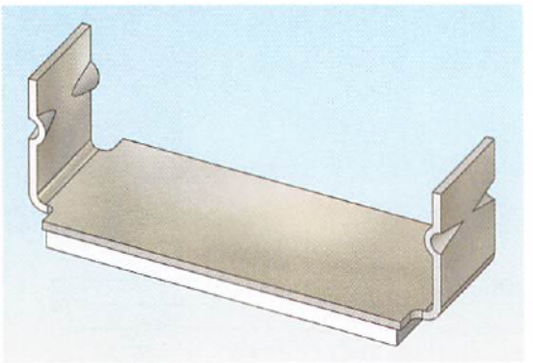



Material: Aluminum, RMS-194 • Adhesive Back: RMS-34 Color: Bright Finish			
Part No.	Standard Pack: 250 per bag		
	Cable Width "A"	"B"	"C"
AFCC-08	1/2 (12.7)	1/4 (6.4)	.02 (0.5)
AFCC-12	3/4 (19.1)	1/4 (6.4)	
AFCC-16	1 (25.4)	5/16 (7.9)	
AFCC-20	1 - 1/4 (31.8)	3/8 (9.5)	
AFCC-21	1 - 5/16 (33.3)	.385 (9.8)	
AFCC-24	1 - 1/2 (38.1)	7/16 (11.1)	
AFCC-27.5	1.715 (43.6)	.490 (12.4)	
AFCC-28	1 - 3/4 (44.5)	1/2 (12.7)	.03 (0.8)
AFCC-32	2 (50.8)	9/16 (14.3)	
AFCC-36	2 - 1/4 (57.2)	5/8 (15.9)	
AFCC-40	2 - 1/2 (63.5)	11/16 (17.5)	

Features
- Bend aluminum retaining arms to secure ribbon cable
- Low profile for limited space application

FCC
Flat Cable Clamp with Adhesive Base

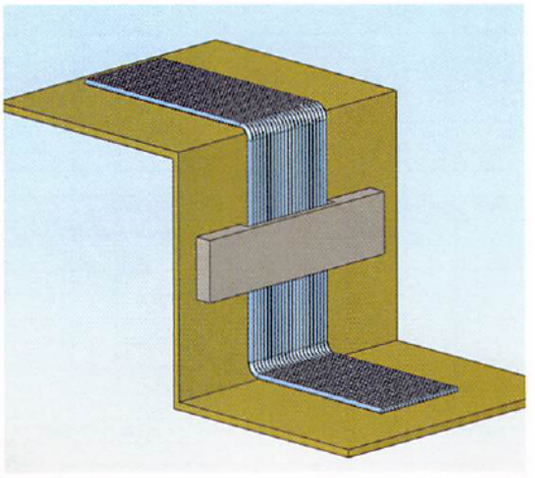

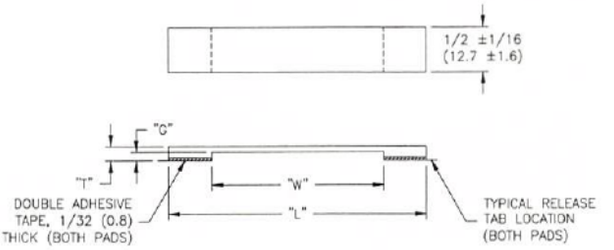

Features
- Attach clamp over flat cables to secure them in place

Material: PVC, RMS-04 • Adhesive Back: RMS-15 Color: Black				
Part No.	Standard Pack: 100 per bag			
	Clamp Width "L" +1/8 / -0 (+3.2 /-0)	Opening Width "W" +1/16 / -0 (+1.6 /-0)	Clamp Thickness "T" +.015 / - .020 (+0.4 / - 0.5)	Holding Thickness "G" +.010 / -.020 (+0.3 / - 0.5)
FCC-4-3-RT	1.5 (38.1)	.500 (12.7)	5/32 (4)	3/32 (2.4)
FCC-6-3-RT	1.7 (43.2)	.700 (17.8)		
FCC-8-3-RT	2 (50.8)	1 (25.4)		
FCC-16-3-RT	3 (76.2)	2 (50.8)		
FCC-24-3-RT	4 (101.6)	3 (76.2)		
Custom lengths are available by special order.				

DFCC
Dual Flat Cable Clamp with Adhesive Base

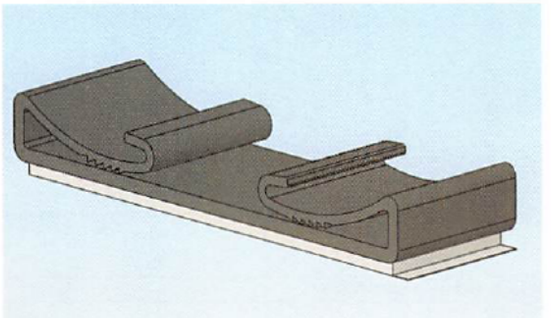

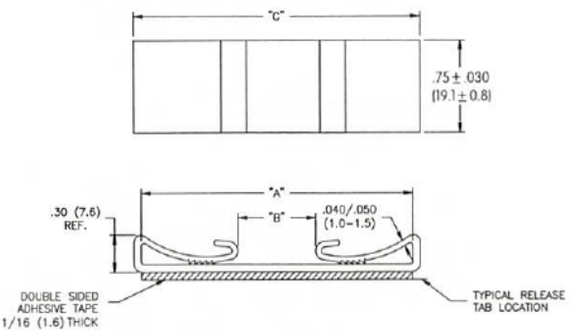

Features
- Serrated grip on both sides prevents slippage

Material: PVC, RMS-04 • Adhesive Back: RMS-15 Color: Black				
Part No.	Standard Pack: 100 per bag			
	"A" ± 1/32 (0.8)	"B" Ref.	"C" Ref.	No. of Conductors
DFCC-2-RT	2 - 5/16 (58.7)	21/32 (16.7)	2-7/16 (61.9)	34-37-40
DFCC-3-RT	3 - 1/4 (82.6)	1-39/64 (40.9)	3-3/8 (85.7)	50-60-64
Custom lengths are available by special order.				

800-621-1892
Get quote
Angic Global Solutions 1-888-872-0690
https://www.AngicGlobal.com Sales@AngicGlobal.com

CFCC
Flat Cable Clamp on Adhesive Base

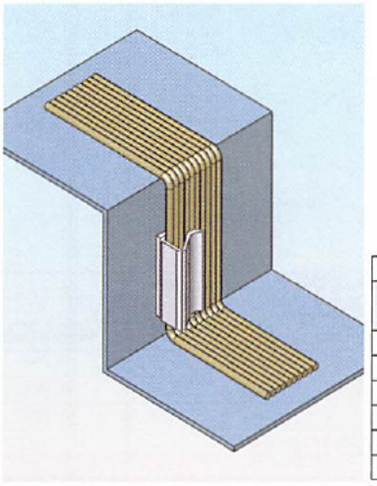

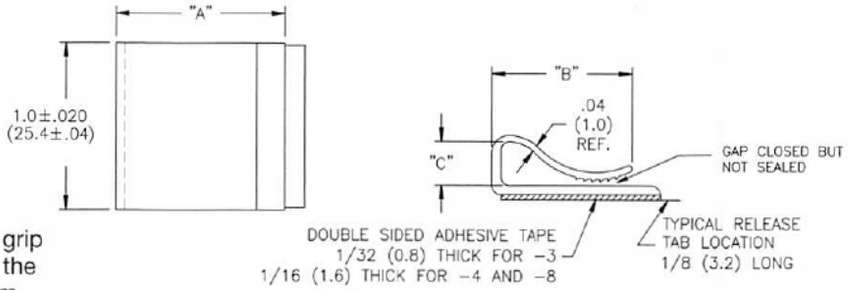

Features
- Serrated grip prevents the cable from slipping

Part No.	Adhesive Back: RMS-15 Standard Pack: 1,000 per bag			
	"A"	"B" Ref.	"C" ± .015 (0.4)	Material/Color
CFCC-3-05A-RT	.563 ± .025	.490 (12.45)	.18 (4.6)	Noryl, RMS-05 / White
CFCC-4-05A-RT	(14.29 ± 0.64)	.420 (10.67)	.25 (6.4)	
CFCC-8-05A-RT	1.062 ± .030	.880 ± .025		
CFCC-8-04A-RT	(26.97 ± 0.76)	22.35 ± 0.64		Rigid PVC, RMS-04 / Grey
Custom lengths available by special order.				
Available without adhesive by special order. To order, remove A-RT from the end of the part no.				

SFCC
Split Flat Cable Clamp

SFCC-4

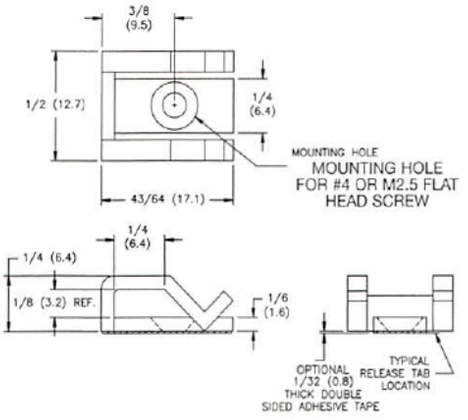

SFCC-8

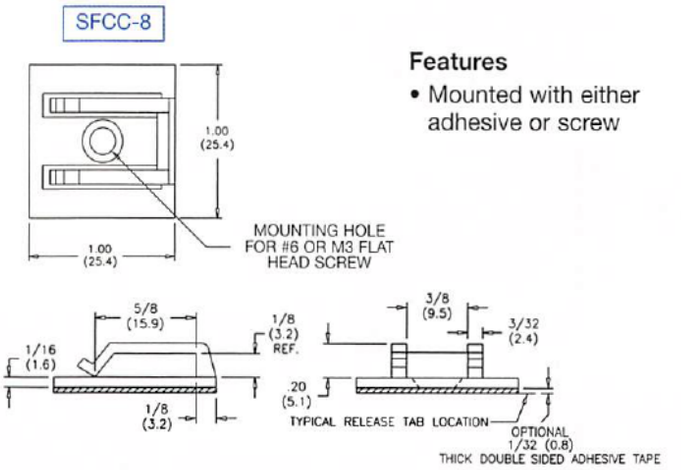

Features
- Mounted with either adhesive or screw

Material: Nylon 6/6, RMS-01*; Adhesive Back, RMS-15 • Color: Natural	
Standard Pack: 1,000 per bag	
Part No. W/O Tape	Part No. With Tape
SFCC-4-01	SFCC-4-01A-RT
SFCC-8-01	SFCC-8-01A-RT
*UL94 V0 Nylon, RMS-19 available by special order. To order replace -01 with -19	

CFCCS-8-01A
Split Flat Cable Clamp on Adhesive Base

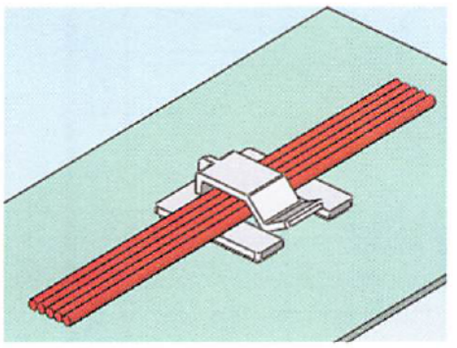

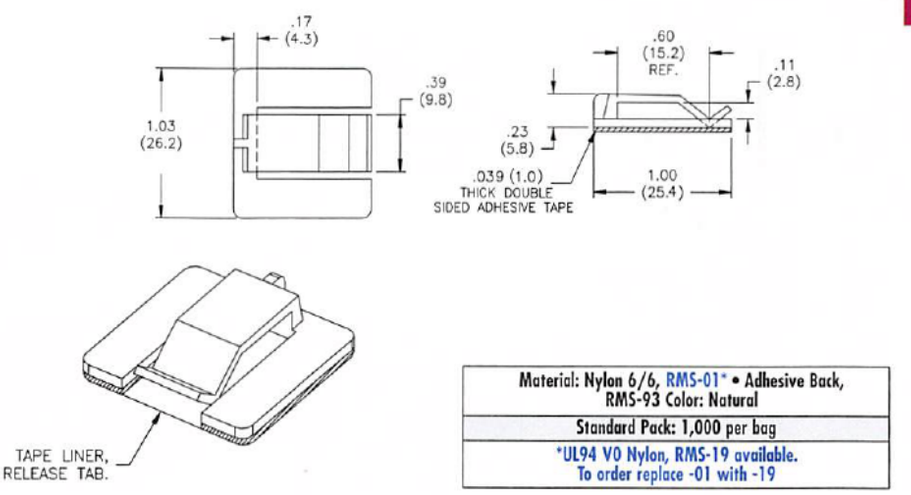

Material: Nylon 6/6, RMS-01* • Adhesive Back, RMS-93 Color: Natural
Standard Pack: 1,000 per bag
*UL94 V0 Nylon, RMS-19 available. To order replace -01 with -19

539-4060 Sam
Get quote
Angic Global Solutions 1-888-872-0690
https://www.AngicGlobal.com Sales@AngicGlobal.com

TFCM

Flat Cable Clamp with Tension on Adhesive Base

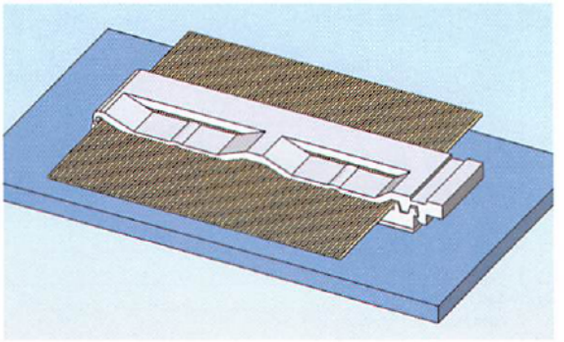

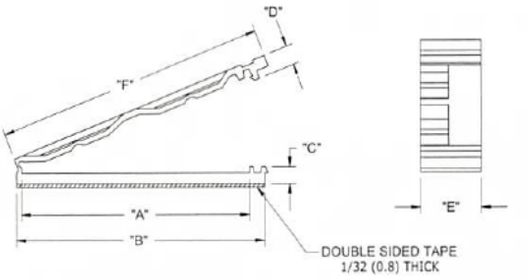

Features

- Provides tension to the cable to ensure stability

Mat'l: Nylon 6/6, RMS-01* ; Adhesive back, RMS-92 • Color: Natural							
Standard Pack: 1,000 per bag							
Part No.	"A" Ref.	"B" Ref.	"C" Ref.	"D" Ref.	"E" Ref.	"F" Ref.	Suitable Cable
TFCM-25S	.87 (22)	1.06 (27)	.12 (3)	.19 (4.7)	.39 (10)	1.26 (32)	15 PIN
TFCM-25	1.15 (29.3)	1.44 (36.5)			.39 (10)	1.57 (40)	20 PIN
TFCM-25M	2.20 (55.8)	2.41 (61.2)	.16 (4)		.59 (15)	2.59 (66)	40 PIN
*UL94 V0 Nylon, RMS-19 available by special order.							

TFCC

Flat Cable Clamp with Tension on Adhesive Base

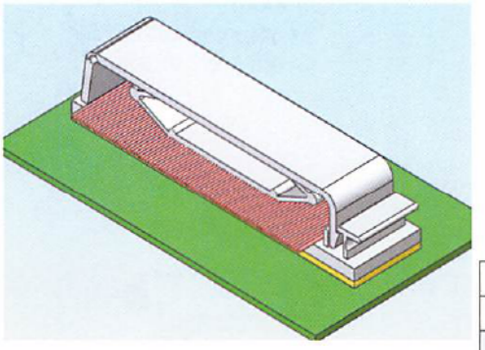

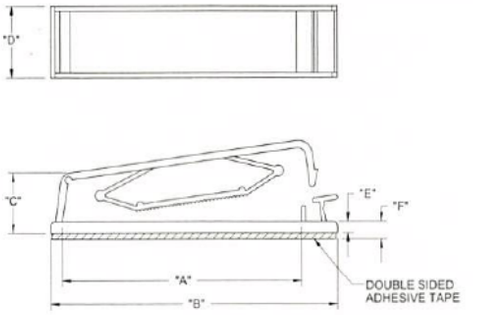

Features

- Tension device holds cables firmly in place

Mat'l: Nylon 6/6, RMS-01, Adhesive Back, RMS-92 Color: Natural, Adhesive Base: RMS-92							
Standard Pack: 100 per bag							
Part No.	Max No Of Conductors	"A"	"B"	"C"	"D"	"E"	"F" REF
TFCC-30-01	30	1.26 (32 ± 0.4)	1.77 (45 ± 1.5/-0.519)	.62 (15.8 ± 0.5)	.73 (18.6 ± .2/-0.3)	.12 (3 ± 0.2)	.18 (4.6)
TFCC-40-01	40	2.13 (54 ± 0.6)	2.64 (67 ± 1)		.62 (15.8 ± 1)	.12 (3.1 ± 0.2)	.19 (4.7)
TFCC-50-01	50	2.57 (65.2 ± 0.7)	3.09 (97.5 ± 1.5)		.74 (18.8 ± 1.2/-0.3)		

TFCCA

Flat Cable Clamp with Tension, Arrowhead Mounted

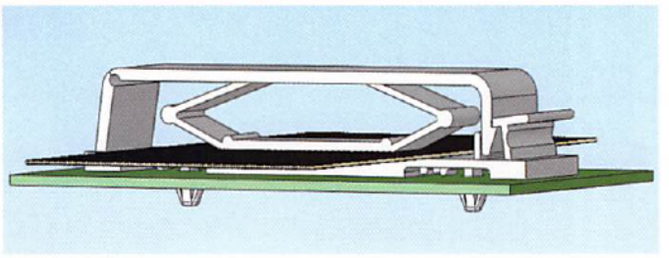

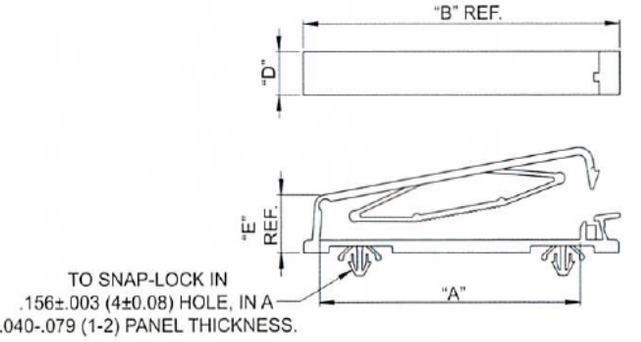

Features

- Tension device holds cables firmly in place

Material: Nylon 6/6, RMS-01 Color: Natural						
Part No.	Standard Pack: 100 per bag					
	Max. No. of Conductors	"A" ± .02 (0.5)	"B" Ref.	"C" ±.005 (0.13)	"D" ±.015 (0.4)	"E" Ref.
TFCCA-15-01	10	.57 (14.5)	1.28 (32.5)	.591 (15)	.36 (9.1)	.56 (14.1)
TFCCA-25-01	20	.97 (24.7)	1.55 (39.3)	.787 (20)	.52 (13.2)	.50 (12.7)
TFCCA-40-01	40	2.13 (54.1)	2.64 (67)	1.575 (40)	.39 (10)	.64 (16.3)
TFCCA-50-01	50	2.51 (63.8)	3.04 (77.2)	1.957 (49.7)	.40 (10.2)	.54 (13.7)

-800-621-1892
ANGIC
Get quote
Angic Global Solutions 1-888-872-0690
https://www.AngicGlobal.com Sales@AngicGlobal.com

FCCS
Snap In Flat Cable Clamp

NEW

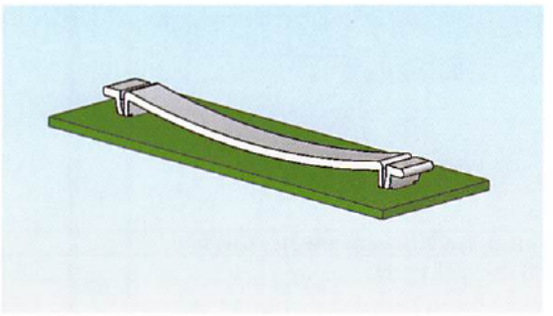

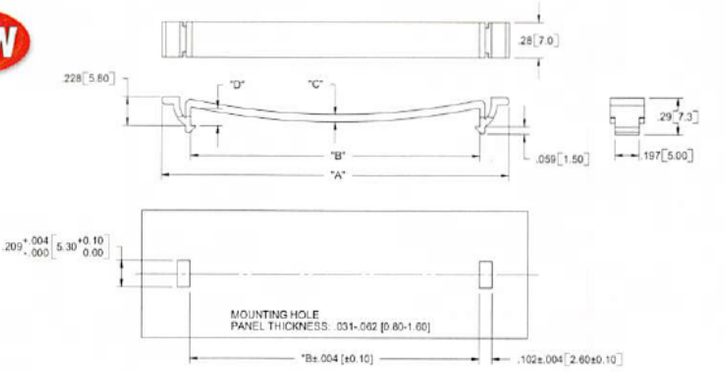

Features
- Low profile
- Easily removable from top of panel

Mat'l: Nylon 6/6, RMS-01* Color: Natural				
Standard Pack: 500 per bag				
Part No.	**"A"**	**"B"**	**"C"**	**"D"**
FCCS-1	1.06 (27.0)	.59 (15.0)	.031 (0.80)	.13 (3.4)
FCCS-2	1.65 (42.0)	1.18 (30.0)	.039 (1.0)	.15 (3.7)
FCCS-3	1.85 (47.0)	1.38 (35.0)		
FCCS-4	2.24 (57.0)	1.77 (45.0)	.047 (1.20)	
FCCS-5	2.83 (72.0)	2.36 (60.0)	.059 (1.50)	
*Available in UL94 V0 material by special order only. To order, replace -01 with -19.				

FCCE-9-01
Flat Cable Clamp

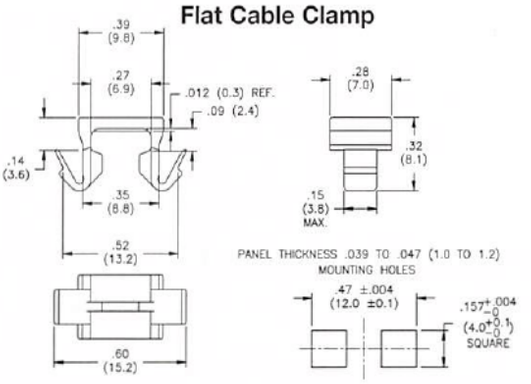

Features
- Holds down ribbon cable up to 1/4 (6.35) wide

Material: Nylon 6/6, RMS-01 Color: Natural
Standard Pack: 1,000 per bag

CFCCA
Flat Cable Clamp

NEW

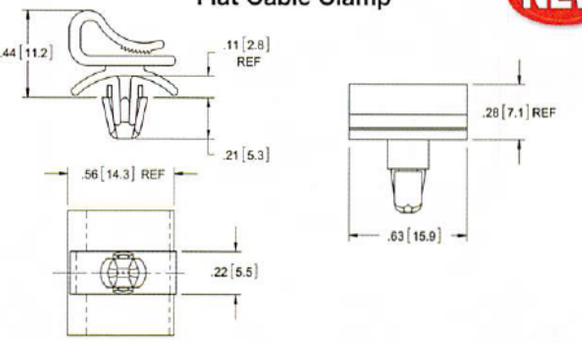

Material: Nylon 6/6, RMS-01* Color: Natural		
Standard Pack: 1,000 per bag		
Part No.	**Mounting Hole ±.003 (0.08)**	**Panel Thickness**
CFCCA-1-01	.187 (4.75)	.031-.078 (0.79-1.98)
*UL94 V0 material by special order only. To order, replace -01 with -19.		

FCLC/FCLCS
Flat Cable Loop Clip

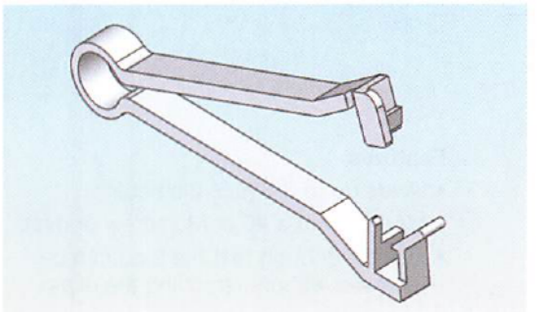

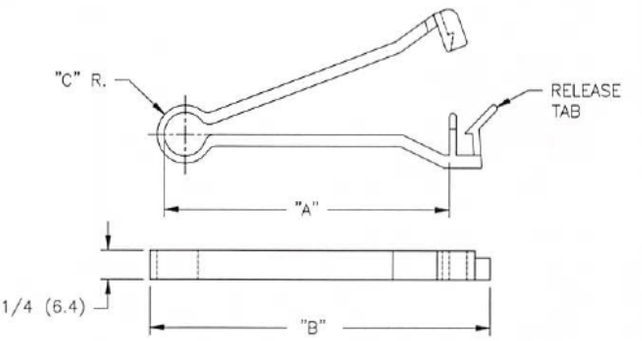

Features
- Releasable and reusable
- Allows for quick positive clamping of flat cables without the need for securing to a board or chassis

Material: Nylon 6/6, RMS-01 Color: Natural			
Part No.	Standard Pack: 500 per bag		
	"A" Max. Cable Width	**"B" Ref.**	**"C" Ref.**
FCLCS	1.5 (38.1)	2.0 (50.8)	.23 (5.8)
FCLC	2.5 (63.5)	3.0 (76.2)	.25 (6.4)

39-4060 Samp
Get quote
Angic Global Solutions 1-888-872-0690
https://www.AngicGlobal.com Sales@AngicGlobal.com

STC
Steel Tension Clamp

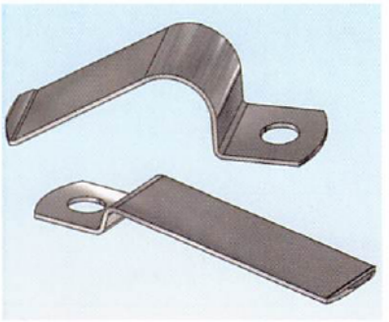

Features
- Excellent resistance to abrasion, weathering, corrosion, and temperature extremes
- Installed with a #6 or M3 screw or rivet

Fig. 1

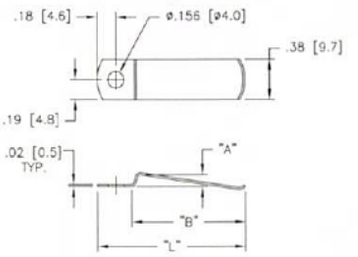

Fig. 2

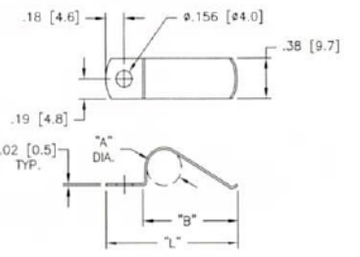

Mat'l: 1050 Spring Steel, RMS-206 • Finish: Black Oxide and Oil, RMS-216 • Color: Black Standard Pack: 1,000 per bag				
Part No.	**"L"**	**"A"**	**"B"**	**Fig.**
STC-75	.83 (21)	.13 (3.2)	.46 (11.8)	1
STC-100	1.04 (26.4)		.68 (17.3)	
STC-125	1.24 (31.4)		.91 (23)	
STC-150	1.45 (36.8)	.11 (2.8)	1.12 (28.3)	
STC1-75	.76 (19.3)	.09 (2.4)	.40 (10.1)	2
STC1-100	1.32 (33.5)	.23 (5.8)	.95 (24.1)	
STC1-125	1.17 (29.8)	.31 (7.9)	.85 (21.5)	
STC1-150	1.29 (32.8)	.34 (8.6)	.93 (23.7)	

STCV
Vinyl Coated Steel Tension Clamp

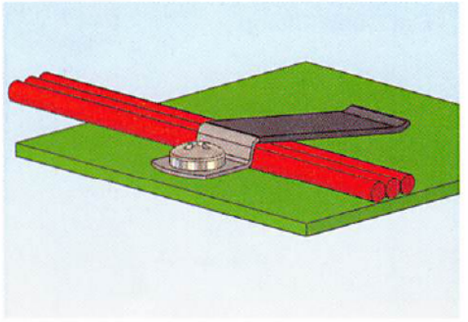

Features
- Vinyl coating protects and insulates wires and components
- Installed with a #6 or M3 screw or rivet

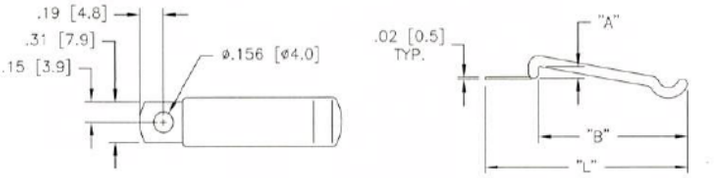

Mat'l: Stainless Steel SAE 30301, RMS-197 • Color: Black • Coating: Plastisol Vinyl, RMS-196 - 1/32 (0.79) Nom. Thk. Standard Pack: 1,000 per bag			
Part No.	**"L"**	**"A"**	**"B"**
STCV-1	1.61 (40.9)	.09 (2.3)	1.19 (30.2)
STCV-2	2.63 (66.8)		2.24 (56.9)
STCV-3	3.61 (91.7)		3.19 (81)
STCV-4	4.61 (117.1)		4.19 (106.4)

TC-30-1
Tension Clamp

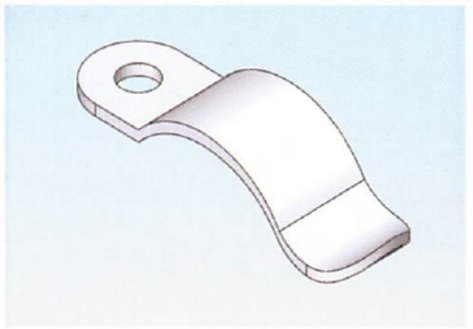

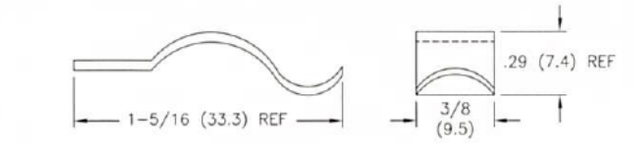

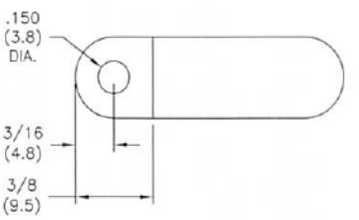

Features
- Holds up to 3/8 (9.5) diameter
- Mounts with a #6 or M3 screw or rivet
- Flexible enough that the load can be removed without removing the clip

Material: Acetal, RMS-14* Color: Natural or Black, specify when ordering. To order black, use Part No. TC-30-1BK Standard Pack: 1,000 per bag *Nylon 6/6, RMS-01 available by special order

-800-621-1892
Angic Global Solutions 1-888-872-0690
https://www.AngicGlobal.com Sales@AngicGlobal.com
Get quote

EHWSE-1-01
Edge Holding Wire Saddle

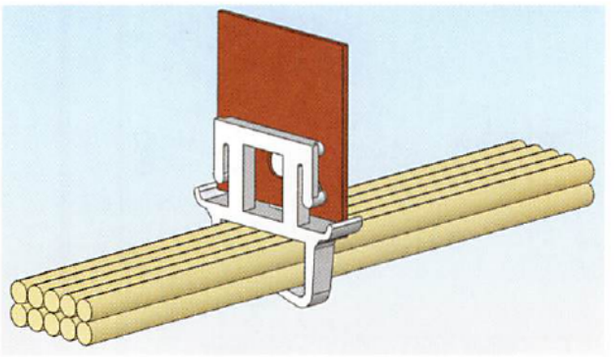

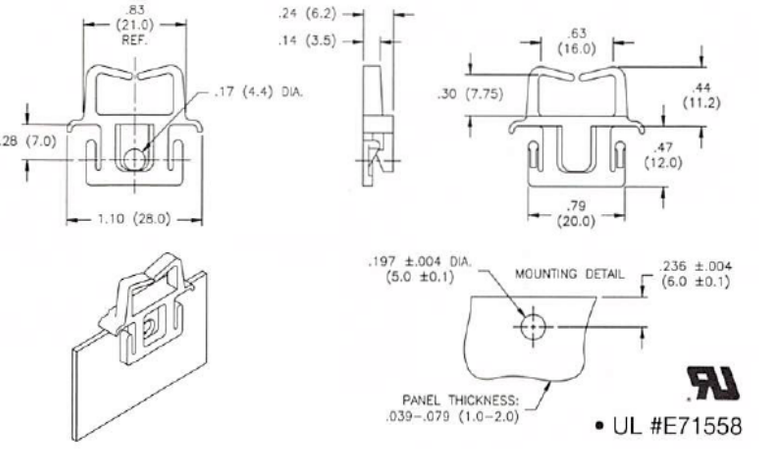

• UL #E71558

Features
- Straddles the edge of a chassis or PCB
- Mounts vertically or horizontally

Material: Nylon 6/6, RMS-01* • Color: Natural
Standard Pack: 500 per bag
*UL94 V0 Nylon, RMS-19 available by special order. To order, replace -01 with -19.

EWSE-8.1/12.8
Edge Holding Wire Saddle

• UL #E71558

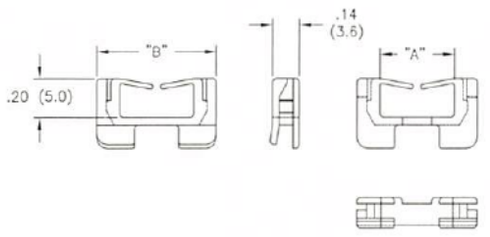

Fig. 1

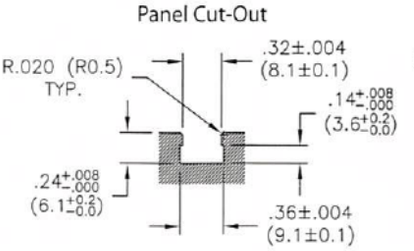

Fig. 2

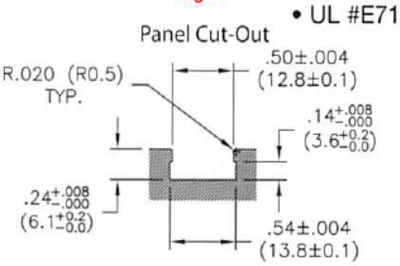

Panel Thickness: .031 - .063 (0.8 - 1.6)

Features
- Snaps into cutout on the chassis
- Routes cables and covers edges of cutout

Material: Nylon 6/6, RMS-01* • Color: Natural			
Part No.	Standard Pack: 1,000 per bag		
	Dim. "A"	Dim. "B"	Fig.
EWSE-8.1-01	.20 (5)	.44 (11.3)	1
EWSE-12.8-01	.39 (10)	.64 (16.2)	2
*UL94 V0 Nylon, RMS-19 available by special order. To order, replace -01 with -19.			

EWSE-1/2/3
Edge Wire Saddle

• UL #E71558

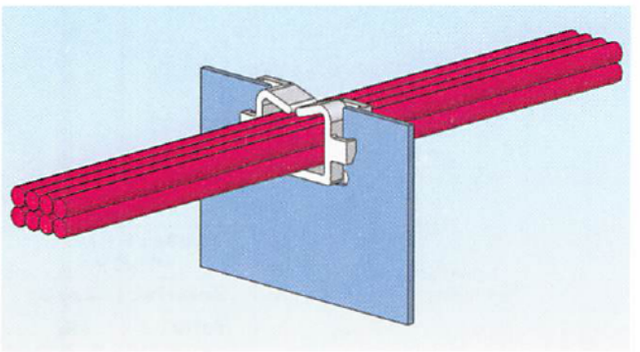

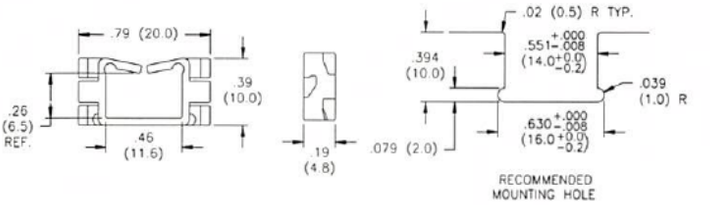

Features
- Available for varying panel thicknesses of .031 - .079 (0.8 – 2.0)

Material: Nylon 6/6, RMS-01*		
Part No.	Standard Pack: 1,000 per bag	
	Panel Thickness	Color
EWSE-1-01	.031 - .047 (0.8 - 1.2)	Black
EWSE-2-01	.047 - .063 (1.2 - 1.6)	Natural
EWSE-3-01	.063 - .079 (1.6 - 2)	Grey
*UL94 V0 Nylon, RMS-19 available by special order. To order, replace -01 with -19.		

539-4060 Sam
Get quote
Angic Global Solutions 1-888-872-0690
https://www.AngicGlobal.com Sales@AngicGlobal.com

EWSJS-1-01
Edge Wire Saddle

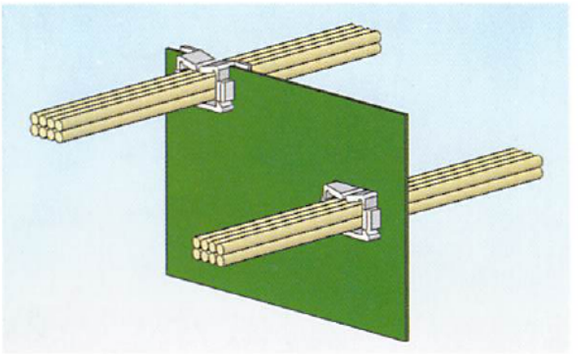

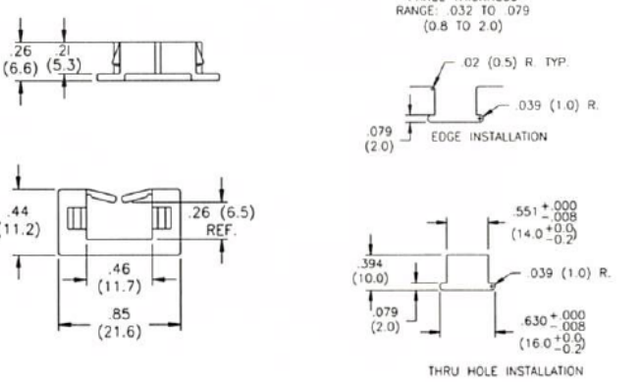

Material: Nylon 6/6, RMS-01* • Color: Natural
Standard Pack: 1,000 per bag
*UL94 V0 Nylon, RMS-19 available by special order. To order, replace -01 with -19.

Features

- Can be installed in a mounting slot-edge or through hole

HEWSE-22-01
Hinged Edge Wire Saddle

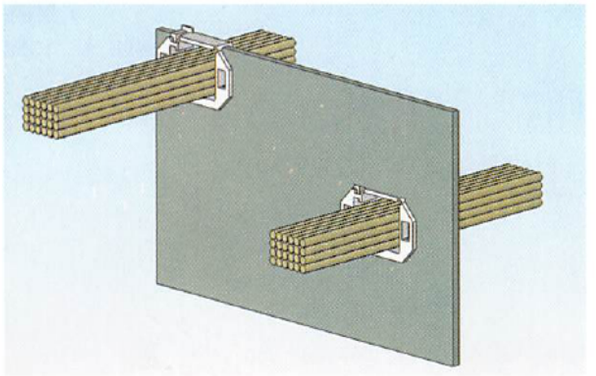

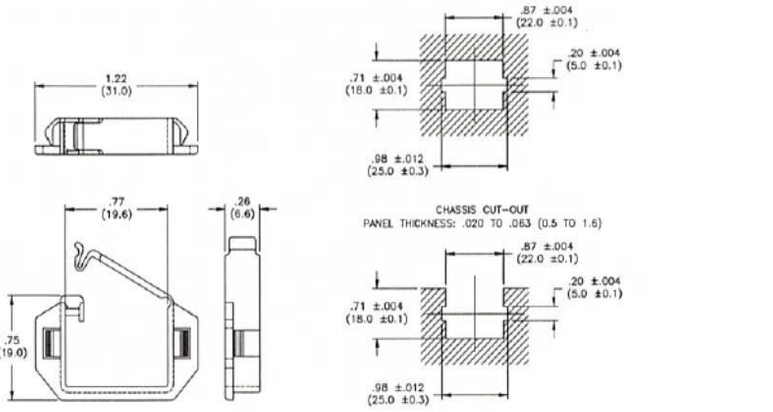

Material: Nylon 6/6, RMS-01* • Color: Natural
Standard Pack: 1,000 per bag
*UL94 V0 Nylon, RMS-19 available by special order. To order, replace -01 with -19.

Features

- Routes cables and softens edges of cutout
- Hinged feature allows the user to retrofit it into pre-existing applications

LEWSE
Edge Wire Saddle

Fig. 1

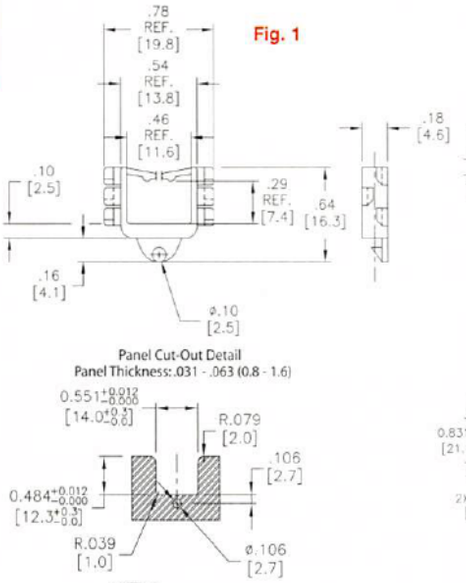

Fig. 2

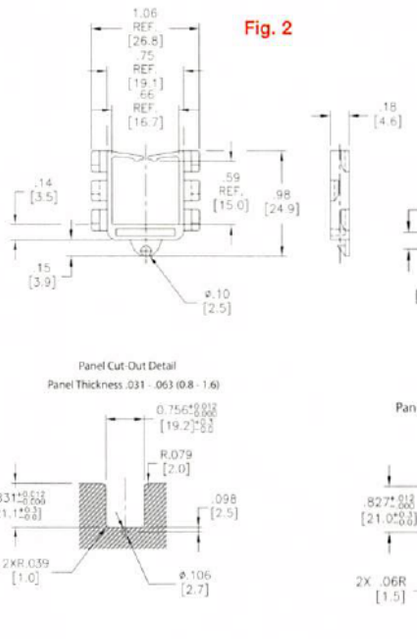

Fig. 3

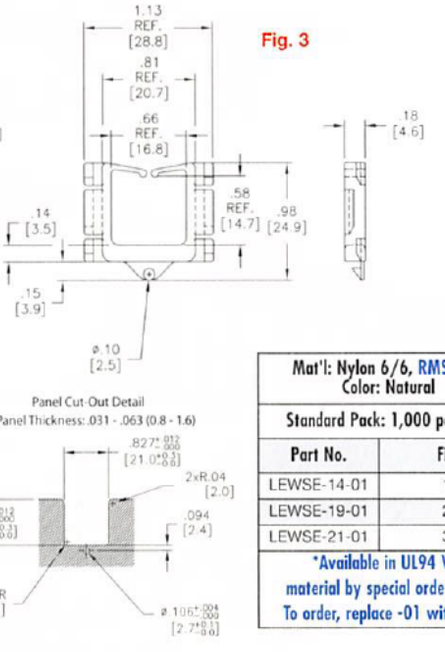

Mat'l: Nylon 6/6, RMS-01* Color: Natural	
Standard Pack: 1,000 per bag	
Part No.	Fig
LEWSE-14-01	1
LEWSE-19-01	2
LEWSE-21-01	3
*Available in UL94 V0 material by special order only. To order, replace -01 with -19.	

800-621-1892
Angic Global Solutions 1-888-872-0690
https://www.AngicGlobal.com Sales@AngicGlobal.com
Get quote

SHR/CAT

Slit Harness Wrap with Installation Tool

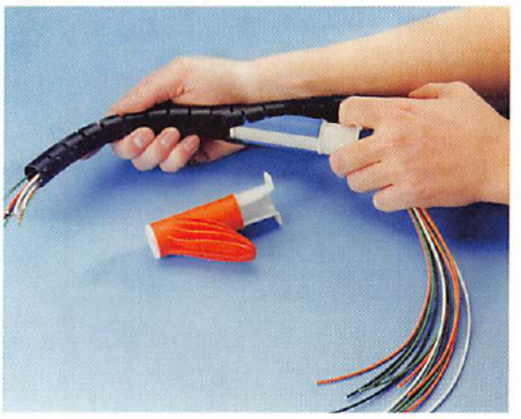

• UL #E71558

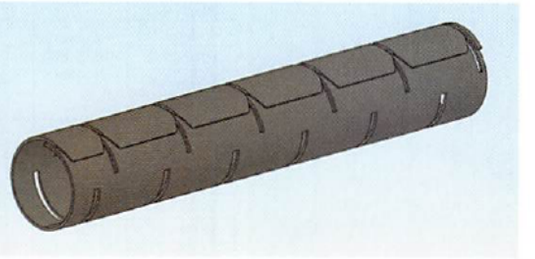

Features

- Easy to use. Simply insert the wires into the tool (sold separately), feed the wrap over the horn of the tool and zip the wires into a neat bundle
- Allows easy breakout of wires
- Provides abrasion protection

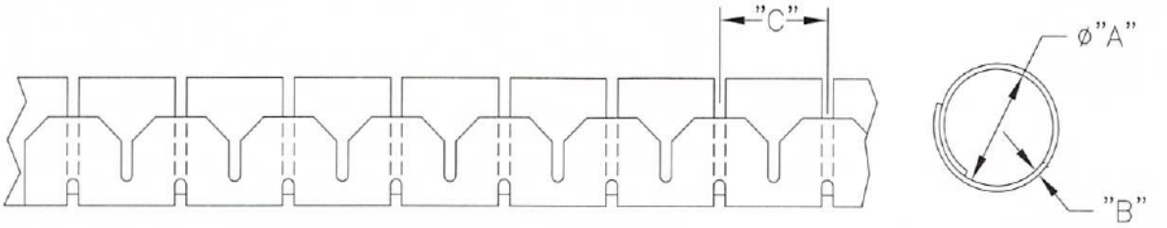

Material: See Chart • Color: See Chart							
Part No.	A Ref.	Max. Bundle Dia.	B Ref.	C Ref.	Standard Lengths	Material / Color	Installation Tool Part No.
SHR-08-6NB	.31 (8)	.39 (10)	.032 (0.8)	.39 (10)	100m	Nylon (RMS-85) / Black	CAT-08-PP
SHR-15-6NB	.59 (15)	.63 (16)	.032 (0.8)	.55 (14)	50m		CAT-15-PP
SHR-20-6NB	.79 (20)	.90 (23)	.035 (0.9)	.67 (17)	30m		CAT-20-PP
SHR-25-6NB	.98 (25)	.98 (25)	.039 (1)	.79 (20)	20m		CAT-25-PP
SHR-32-6NB	1.25 (32)	1.25 (32)	.050 (1.3)	.98 (24.9)	15m		CAT-32-PP
SHR-08-6V0B	.31 (8)	.39 (10)	.032 (0.8)	.39 (10)	100m	UL94 V0 Nylon (RMS-95) Black	CAT-08-PP
SHR-15-6V0B	.59 (15)	.63 (16)	.032 (0.8)	.55 (14)	50m		CAT-15-PP
SHR-20-6V0B	.79 (20)	.90 (23)	.035 (0.9)	.67 (17)	30m		CAT-20-PP
SHR-25-6V0B	.98 (25)	.98 (25)	.039 (1)	.79 (20)	20m		CAT-25-PP
SHR-32-6V0B	1.25 (32)	1.25 (32)	.050 (1.3)	.98 (24.9)	15m		CAT-32-PP
SHR-08-PPB	.31 (8)	.39 (10)	.032 (0.8)	.39 (10)	100m	Polypropylene (RMS-94) / Black	CAT-08-PP
SHR-15-PPB	.59 (15)	.63 (16)	.032 (0.8)	.55 (14)	50m		CAT-15-PP
SHR-20-PPB	.79 (20)	.90 (23)	.035 (0.9)	.67 (17)	30m		CAT-20-PP
SHR-25-PPB	.98 (25)	.98 (25)	.039 (1)	.79 (20)	20m		CAT-25-PP
SHR-32-PPB	1.25 (32)	1.25 (32)	.050 (1.3)	.98 (24.9)	15m		CAT-32-PP
Available in various colors by special order.							
For High Temperature applications up to 266°F (130° C) high temperature Nylon (RMS-157) is available by special order. To order, use PN SHR-XX-HTNB. 5,000m minimum							

CAT Installation Tool

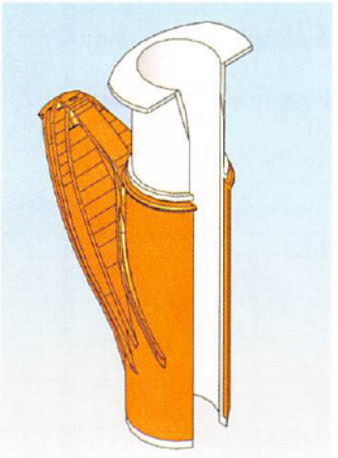

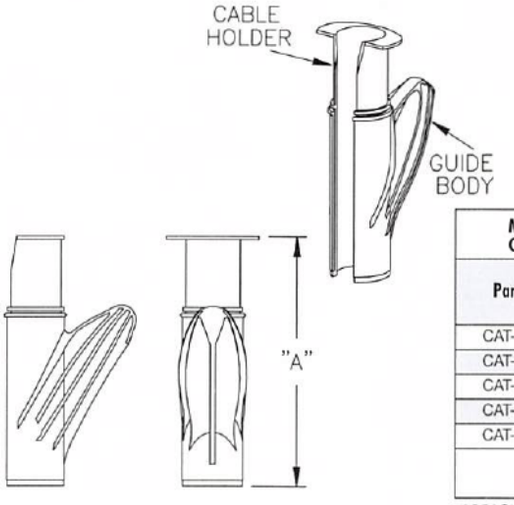

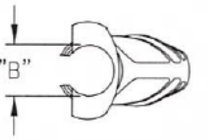

Material: Guide Body: Polypropylene, RMS-268 Color: Orange; Cable Holder: Polyacetal, RMS-267 Color: White			
Part No.	Standard Pack: 1		
	"A" Ref	Max. Bundle Dia. "B"	To be used with
CAT-08-PP	2.80 (71)	.37 (9.5)	SHR-08-YYY*
CAT-15-PP	3.19 (81)	.63 (16)	SHR-15-YYY*
CAT-20-PP	3.94 (100)	.79 (20)	SHR-20-YYY*
CAT-25-PP	4.45 (113)	.96 (24.5)	SHR-25-YYY*
CAT-32-PP	5.67 (144)	1.22 (31)	SHR-32-YYY*
Tool available in bulk packages of 100/box. To order add -BU to the end of the part no.			

*YYY-SHR material

Get quote
Angic Global Solutions 1-888-872-0690
https://www.AngicGlobal.com Sales@AngicGlobal.com

HR
Spiral Wrap

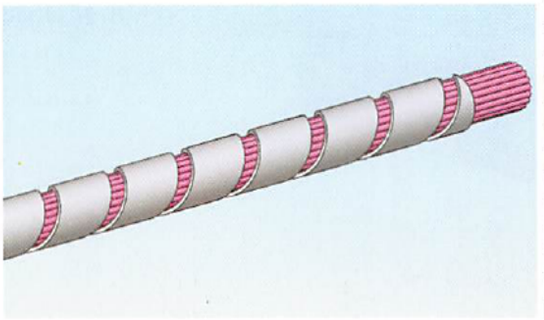

Features

- Free assembly tool (HRT-1) with every 100 foot (30 meter) roll
- Flexible enough to bend around corners

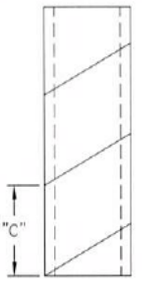

- UL #E71558

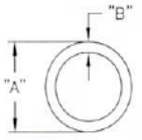

Part No.	Material/ Color	"A" Ref.	"B" Ref.	"C" Ref.	Bundle Range	Standard Pack
HR2N-1/8	Nylon (RMS-88) Natural	1/8 (3.2)	.020 (0.5)	.17 (4.3)	1/16 to 1/2 (1.6 - 12.7)	100' (30 meter) rolls
HR3N-3/16		3/16 (4.8)		.25 (6.4)	1/8 to 1 (3.2 - 25.4)	
HR4N-1/4		1/4 (6.4)	.025 (0.6)	.30 (7.6)	3/16 to 1-1/2 (4.8 - 38.7)	
HR6N-3/8		3/8 (9.5)	.035 (0.9)	.38 (9.5)	5/16 to 2 (7.9 - 50.8)	
HR8N-1/2		1/2 (12.7)	.040 (1)	.50 (12.7)	3/4 to 4 (19.1 - 101.6)	
HR2P-1/8	Polyethylene (RMS-06) Natural	1/8 (3.2)	.020 (0.5)	.17 (4.3)	1/16 to 1/2 (1.6 - 12.7)	
HR3P-3/16		3/16 (4.8)	.030 (0.8)	.25 (6.4)	1/8 to 1 (3.2 - 25.4)	
HR4P-1/4		1/4 (6.4)	.050 (1.3)	.30 (7.6)	3/16 to 1-1/2 (4.8 - 38.7)	
HR6P-3/8		3/8 (9.5)		.38 (9.5)	5/16 to 2 (7.9 - 50.8)	
HR8P-1/2		1/2 (12.7)	.060 (1.5)	.50 (12.7)	3/4 to 4 (19.1 - 101.6)	
HR12P-3/4		3/4 (19.1)	.070 (1.8)	.75 (19.1)	3/4 to 5 (19.1 - 127)	
HR16P-1		1 (25.4)		1.0 (25.4)	1 to 7 (25.4 - 177.8)	
HR2R-1/8	UL94 V0 Polyethylene (RMS-07) White	1/8 (3.2)	.020 (0.5)	.17 (4.3)	1/16 to 1/2 (1.6 - 12.7)	
HR3R-3/16		3/16 (4.8)	.030 (0.8)	.25 (6.4)	1/8 to 1 (3.2 - 25.4)	
HR4R-1/4		1/4 (6.4)	.050 (1.3)	.30 (7.6)	3/16 to 1-1/2 (4.8 - 38.7)	
HR6R-3/8		3/8 (9.5)		.38 (9.5)	5/16 to 2 (7.9 - 50.8)	
HR8R-1/2		1/2 (12.7)	.060 (1.5)	.50 (12.7)	3/4 to 4 (19.1 - 101.6)	
HR16R-1		1 (25.4)	.070 (1.8)	1.0 (25.4)	1 to 7 (25.4 - 177.8)	
HR2U-1/8	U.V. Stabilized Polyethylene (RMS-06) Black	1/8 (3.2)	.020 (0.5)	.17 (4.3)	1/16 to 1/2 (1.6 - 12.7)	
HR3U-3/16		3/16 (4.8)	.030 (0.8)	.25 (6.4)	1/8 to 1 (3.2 - 25.4)	
HR4U-1/4		1/4 (6.4)	.050 (1.3)	.30 (7.6)	3/16 to 1-1/2 (4.8 - 38.7)	
HR6U-3/8		3/8 (9.5)		.38 (9.5)	5/16 to 2 (7.9 - 50.8)	
HR8U-1/2		1/2 (12.7)	.060 (1.5)	.50 (12.7)	3/4 to 4 (19.1 - 101.6)	
HR4V-1/4	Polycarbonate (RMS-23) Clear	1/4 (6.4)	.025 (0.6)	.30 (7.6)	3/16 to 1-1/2 (4.8 - 38.7)	
Custom lengths and colors available by special order.						
HR is a RIGHT-handed wrap. LEFT-handed wrap is available by special order.						

CT
Corrugated Tubing

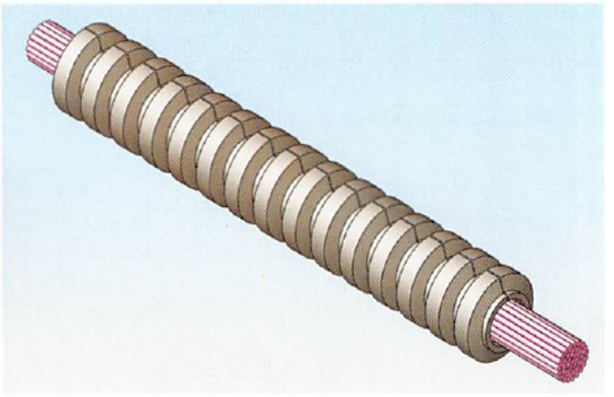

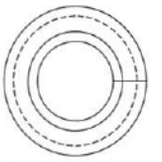

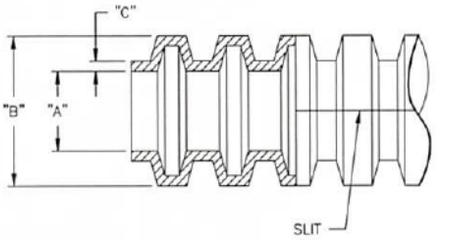

Features

- Protects and reduces the risk of damage to wiring circuits during installation
- Slit down the middle to ease the insertion of wires

Material: Nylon 6, RMS-58 • Color: Black			
Part No.	Standard Pack: 100 Feet (30 meter) coils		
	"A" ±.015 (0.4)	"B" Ref.	"C"
CT-4	.270 (6.9)	.389 (9.9)	.017±.003 (0.40±0.08)
CT-6	.417 (10.6)	.545 (13.8)	
CT-8	.505 (12.8)	.685 (17.4)	
CT-10	.655 (16.6)	.820 (20.8)	
CT-14	.760 (19.3)	.940 (23.9)	
CT-16	.935 (23.7)	1.100 (27.9)	.020±.005 (0.50±0.13)
CT-20	1.260 (32)	1.500 (38.1)	

800-621-1892
Angic Global Solutions 1-888-872-0690
https://www.AngicGlobal.com Sales@AngicGlobal.com
Get quote

RX
Richflex Flexible Channel

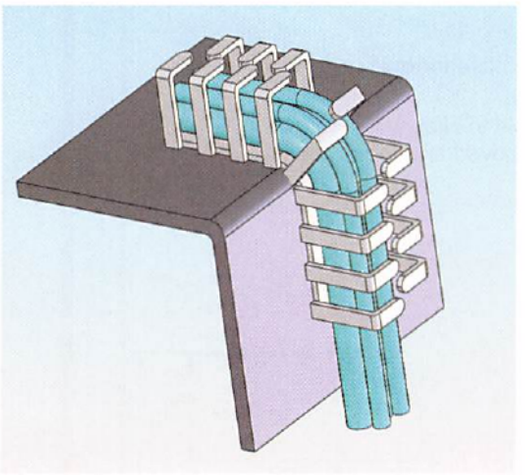

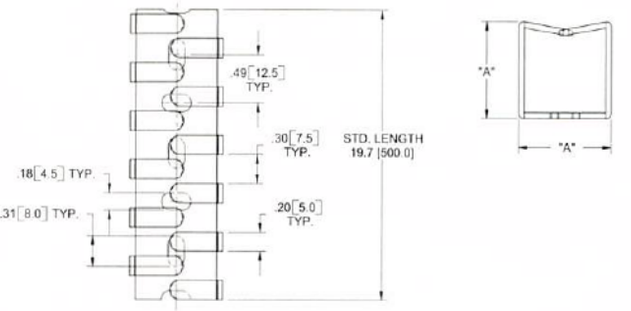

Features

- Mounted with adhesive or with a screw
- Flexible base is useful in routing wires from the back of control panels and sidewalls to components mounted on control panel doors
- Flexible ribs allow the wires or fibers to be easily "pushed" and "pulled" into and out of the channel

Material: Polypropylene, RMS-177 • Adhesive Back, RMS-93 • Color: Grey • Std. Length: 19.7 (500)

Part No.	Ext. Dim. "A" x "A" in (mm)	Int. Section in² (mm²)	Standard Packing (pcs)	Mounting Method
RX1313-0	.492 x .492 (12.5 x 12.5)	.171 (110)	112	Screw
RX1313-4				Adhesive
RX1616-0	.630 x .630 (16 x 16)	.287 (185)	84	Screw
RX1616-4				Adhesive
RX2020-0	.787 x .787 (20 x 20)	.496 (320)	112	Screw
RX2020-4				Adhesive
RX2525-0	.984 x .984 (25 x 25)	.775 (500)	70	Screw
RX2525-4				Adhesive
RX3030-0	1.181 x 1.181 (30 x 30)	1.116 (720)	50	Screw
RX3030-4				Adhesive
RX4040-0	1.575 x 1.575 (40 x 40)	2.046 (1320)	50	Screw
RX4040-4				Adhesive
RX5050-0	1.969 x 1.969 (50 x 50)	3.162 (2040)	32	Screw
RX5050-4				Adhesive

SRWD/SRWDN
Slotted Richco Wiring Duct

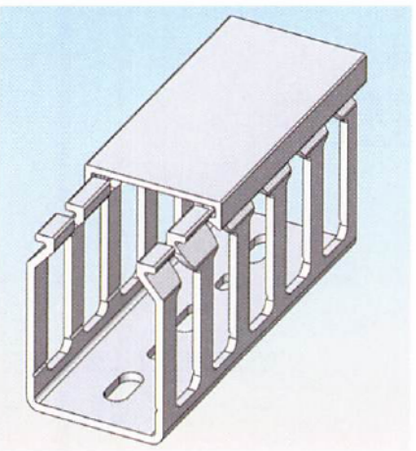

Features

- Used for general purpose control panel wiring and to route and protect wiring in communication closets
- Holds breakout wires while providing flexibility for adding or removing wires
- Non-slip cover is easy to use and is included with the base
- Parts are 6-1/2' (1.98M) long
- Fingers are scored for easy breakout of wires

SRWD-WIDE SLOT

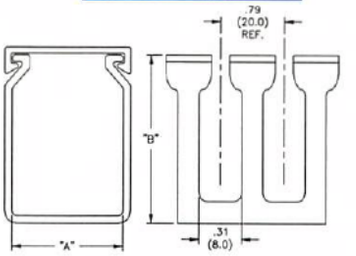

MOUNTING STYLE #1

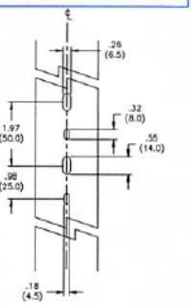

SRWDN-NARROW SLOT

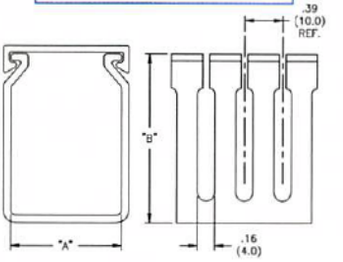

MOUNTING STYLE #2

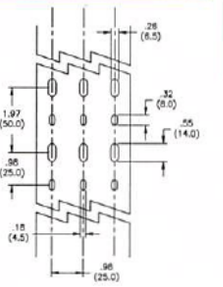

Mat'l: PVC, RMS-195 Color: Grey

Part No.	"A"	"B"	Standard Pack	Mounting Style
SRWD-1015	1.0 (25.4)	1.5 (38.1)	78' (24m)	1
SRWD-1020		2.0 (50.8)		
SRWD-1515	1.5 (38.1)	1.5 (38.1)		
SRWD-1520		2.0 (50.8)		
SRWD-2010	2.0 (50.8)	1.0 (25.4		
SRWD-2020		2.0 (50.8)	52' (16m)	
SRWD-3015	3.0 (76.2)	1.5 (38.1)		2
SRWD-4020	4.0 (101.6)	2.0 (50.8)	26' (8m)	

Parts also available in White, Black and Blue by special order.
To order, add suffix W for White, BL for Blue, and BK for Black

Mat'l: PVC, RMS-195 Color: Grey

Part No.	"A"	"B"	Standard Pack	Mounting Style
SRWDN-1530	1.5 (38.1)	3.0 (76.2)	78' (24m)	1
SRWDN-2030	2.0 (50.8)	2.0 (50.8)		

Parts also available in White, Black and Blue by special order.
To order, add suffix W for White, BL for Blue, and BK for Black

539-4060 Sam
Get quote
Angic Global Solutions 1-888-872-0690
https://www.AngicGlobal.com Sales@AngicGlobal.com

SRL

Surface Raceway on Adhesive Base

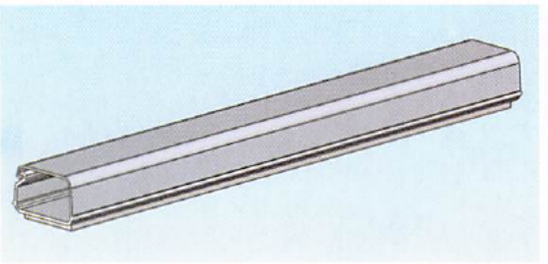

Features

- Adhesive base for quick and easy mounting
- Releasable to allow wires to be easily removed and re-installed

Fig. 1

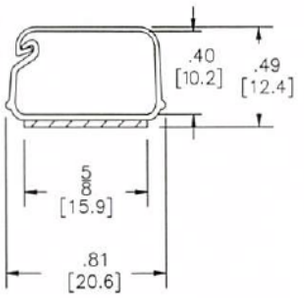

Fig. 2

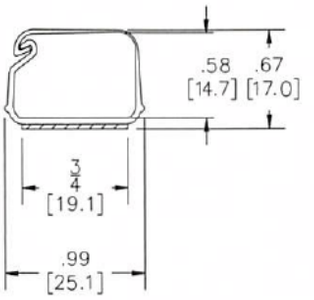

Fig. 3

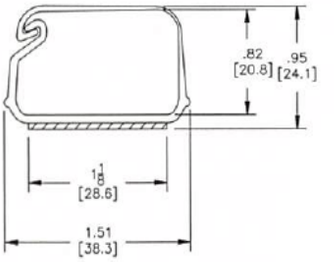

Material: Rigid PVC, RMS -04; Adhesive, RMS-15, 1/32 (0.8) Thick • Color: White			
Part No.	Standard Pack: 6' (1.83 meters) length; custom lengths available by special order		
	Fig.	Wall Thickness (typ.)	Length
SRL-3-WH6A	1	.029 (0.7)	6' ± .25" (1.83m ± 6.35 mm)
SRL-5-WH6A	2	.04 (1)	
SRL-10-WH6A	3	.06 (1.5)	

SCD

Single Cable Duct on Adhesive Base

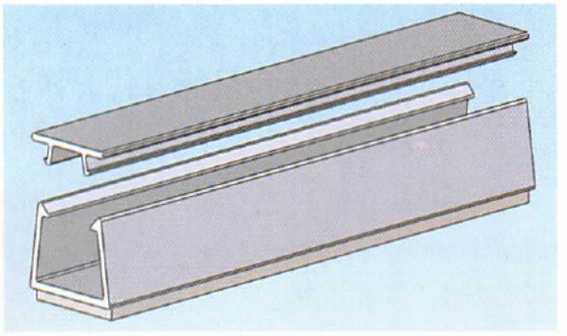

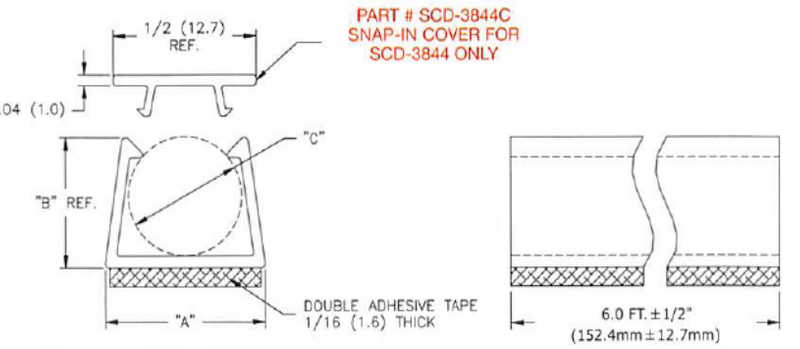

Features

- Designed to route a single cable
- Cover is only needed for the SCD-3844 size raceway

Material: Rigid PVC, RMS-32; Adhesive, RMS-15 • Color: Computer Tan					
Part No.	Standard Pack: 60 ft. (18.3m) in ten 6 ft. (1.83m) long pieces				
	"A"	"B" Ref.	"C" Holding Dia.	Cable Recommendations	
				COAX	COMPUTER
SCD-1521	.30 (7.6)	.25 (6.4)	.156 - .218 (4 - 5.5)	RG58	—
SCD-2228	.36 (9.1)	.29 (7.4)	.218 - .280 (5.5 - 7.1)	RG59,62,6	9 Line
SCD-2838	.47 (11.9)	.38 (9.7)	.280 - .375 (7.1 - 9.5)	Twinax	9-15 Line
SCD-3844	.55 (14)	.43 (10.9)	.375 - .438 (9.5 - 11.1)	—	25 Line

800-621-1892
Get quote
Angic Global Solutions 1-888-872-0690
https://www.AngicGlobal.com Sales@AngicGlobal.com

CRTC-1
CRT Clamp

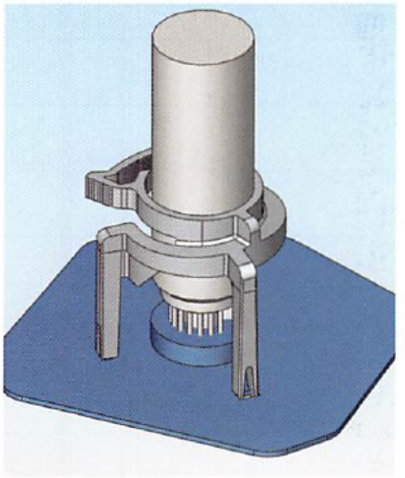

Patent 7209345

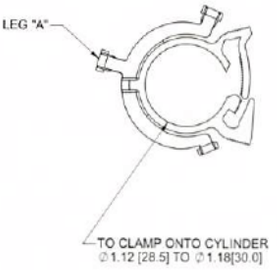

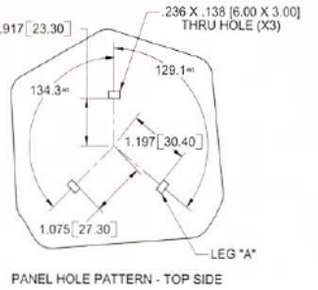

PANEL HOLE PATTERN - TOP SIDE

Features
- Used to connect a television's CRT to the circuit board
- Allows the user to easily tighten the clamp portion without affecting the leg positions of the circuit board
- Reduces assembly time

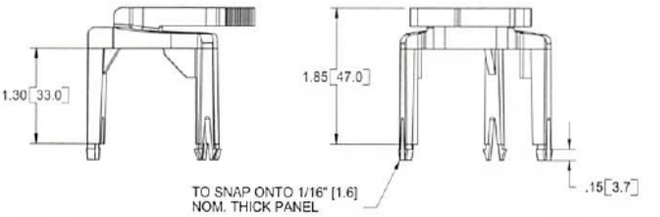

Mat'l: PPE + PS, RMS-130 Color: Black
Standard Pack: 100 per bag

IR
Insulator Ring

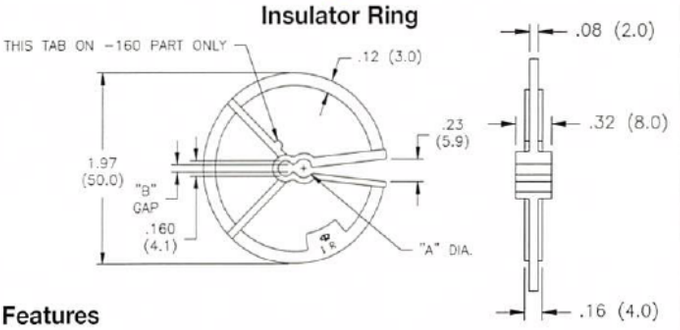

Features
- Keeps high voltage electrical wires away from other components
- Flexible leg design eases wire insertion
- Inner legs surrounding wire allow for a positive fit

NOTE: All dimensions are for reference only

Mat'l: Nylon 6/6, RMS-01 Color: Natural	Mat'l: UL94 V0 Nylon, 6/6, RMS-19 Color: Natural	Standard Pack: 500 per bag	
		"A"	"B"
IR-160-01	IR-160-19	.160 (4.1)	.080 (2)
IR-200-01	IR-200-19	.200 (5.1)	

DGC
Degaussing Clip

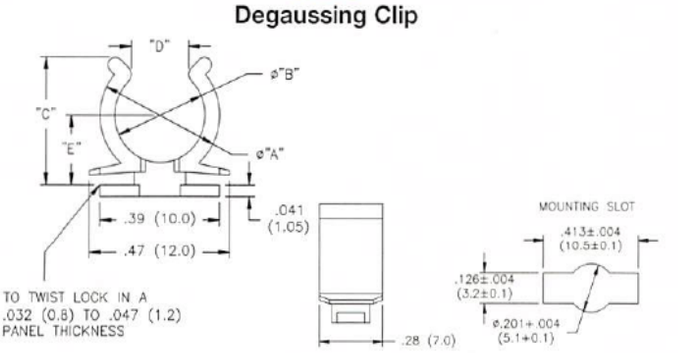

Features
- Turn clip 1/4 turn to lock into place

Part No.		Standard Pack: 1,000 per bag				
Mat'l: Nylon 6/6, RMS-01 Color: Natural	Mat'l: UL94 V0 Nylon, 6/6, RMS-19 Color: Natural	"A" Dia.	"B" Dia.	"C" Ref.	"D" Ref.	"E" Ref.
DGC-6.5-01	DGC-6.5-19	.37 (9.3)	.24 (6.1)	.40 (10)	.094 (2.4)	.20 (5.1)
DGC-8.5-01	DGC-8.5-19	.44 (11.3)	.31 (7.9)	.45 (11.5)	.18 (4.6)	.24 (6.1)

DGCE-12-151
Conductive Degaussing Coil Clamp

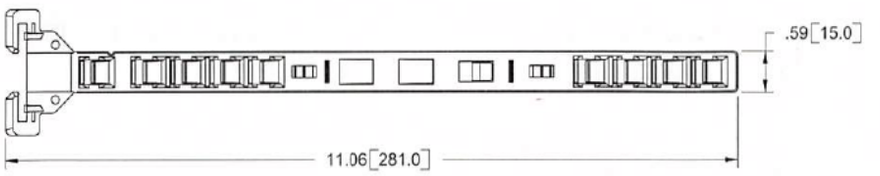

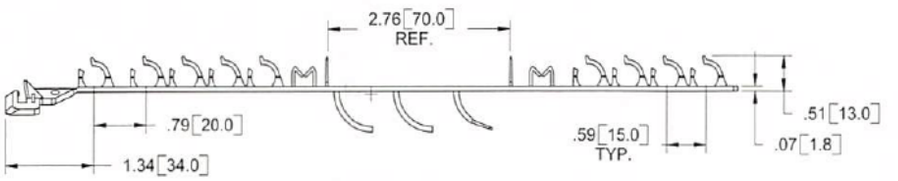

Patent Pending

Features
- Aids in connecting the CRT from the ground of the television tube to the chassis for grounding purposes
- Provides better picture quality through the clips ability to discharge electrical emittance produced by cathode rays
- Eliminates need of metal connection grids

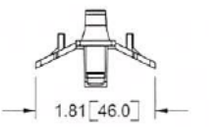

Material: Conductive Polypropylene, RMS-151* Color: Black
Standard Pack: 100 per bag
*Available in non-conductive material, RMS-150, by special order. To order, replace the -151 with -150

539-4060 Sam
Angic Global Solutions 1-888-872-0690
https://www.AngicGlobal.com Sales@AngicGlobal.com
Get quote

Notes

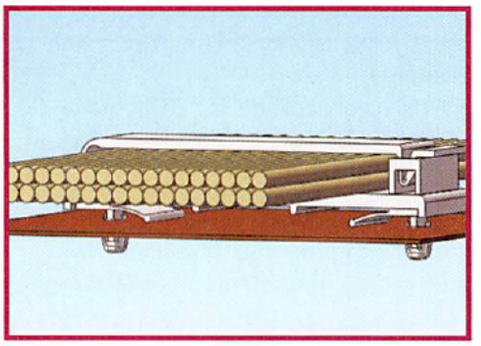

- Up-to-the minute product updates can be seen on our corporate web page at www.richco-inc.com
- Raw Material Specifications (RMS) can be found at the end of the catalog – pages 227-234
- Want to try a sample? Please call 1-800-621-1892

800-621-1892
Angic Global Solutions 1-888-872-0690
https://www.AngicGlobal.com Sales@AngicGlobal.com
Get quote

General Features

Richco has an extensive range of fiber optic products which meet the requirements of telecom and datacom applications at all levels of fiber optic equipment. Our products provide fiber optic storage, protection, transportation, and installation.

Optical fiber is the future for communications into the 21st century. However, optical fibers are vulnerable, particularly in application areas where fiber breakout is required. It is here that transient losses and dB loss can occur and cause signal failure and data errors, which is costly.

Richco's fiber management and protection products have been designed to eliminate the potential hazards such as macro and micro bends resulting from the mishandling of optical fibers during installation, maintenance and upgrade.

Optical Fiber Bend Limiting Tubing

OFBLT offers high fiber protection by resisting crushing, kinking and limits bends to a 30mm bend radius. OFBLT offers superior fiber management for patching, reconfiguration and fiber protection during rough and repeated handling.

Typical Applications

- Automotive - POF (polymer optical fiber) harnesses for infotainment systems such as M.O.S.T™ (Media Oriented System Transport)
- Telecom and Datacom - PCB level - Signal amplification modules, transponder/receiver cards, multiplexing equipment etc.
- Telecom and Datacom - Rack and patch panels, FTTH/FTTB (Fiber To The Home/Business) curb-side racks, buried primary and secondary nodes.
- Mobile Base Station - Antenna and transmission equipment
- Military - Radar and communications equipment

Introduction

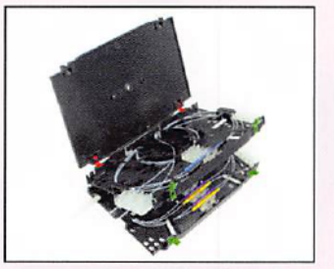

Optical Fiber Splice Trays

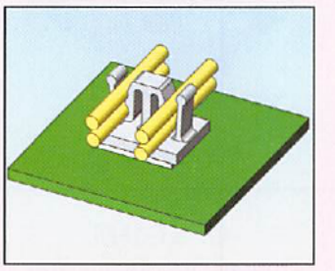

Optical Fiber Holders

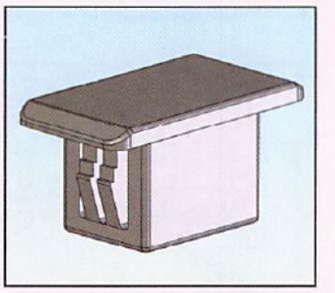

Blanking Plugs

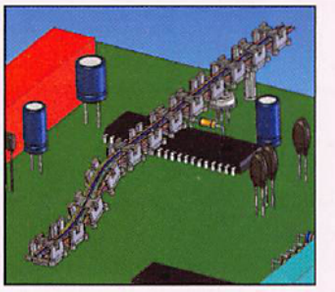

Flexible Fiber Guide

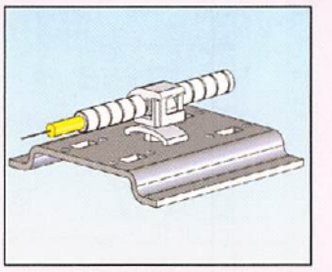

Optical Fiber Bend Limiting Tubing & Clips

J

ANGIC
Get quote
539-4060 Sam
Angic Global Solutions 1-888-872-0690
https://www.AngicGlobal.com Sales@AngicGlobal.com

OFST-1-L

Optical Fiber Splice Tray Lid



Features

- Stackable to any number of trays using OFSTH-1 hinges found on page 187
- Inter-tray fiber routing possible through slots along one of the long sides
- OFSTH color coded hinges indicate side of tray to open from
- Can be used with OFSH splice holders, OFSP splice protectors and OFBLT bend limiting tubing
- To order complete kit, use part number OFST-A-P-1, see below for description

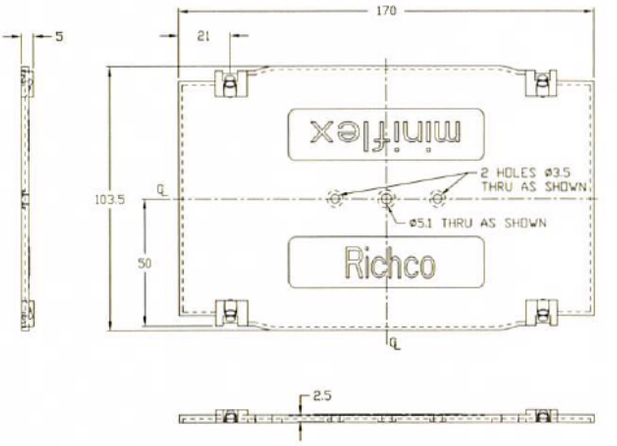

Miniflex Technology manufactured by Richco
Material: UL94 V0 ABS, RMS-105; Color: Black
Standard Pack: 10 per bag
OFST-1-L
All dimensions in millimeters

OFST-1-M

Optical Fiber Splice Tray
Managed with Radius Control and Dark Fiber Storage

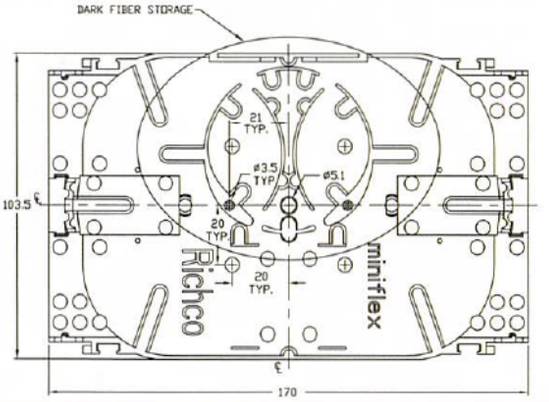

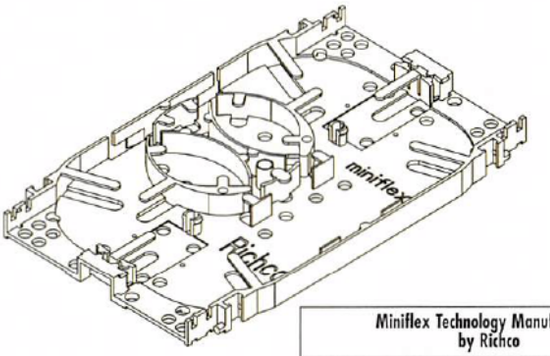

Miniflex Technology Manufactured by Richco	
Material: Glass-Filled UL94 V0 Nylon 6/6, RMS-104 Color: Black	
Standard Pack: 10 per bag	
Part No.	**Tray Thickness**
OFST-1-M	10
All Dimensions in Millimeters	

OFST-1-P

Optical Fiber Splice Tray
Plain with Basic Storage Facility

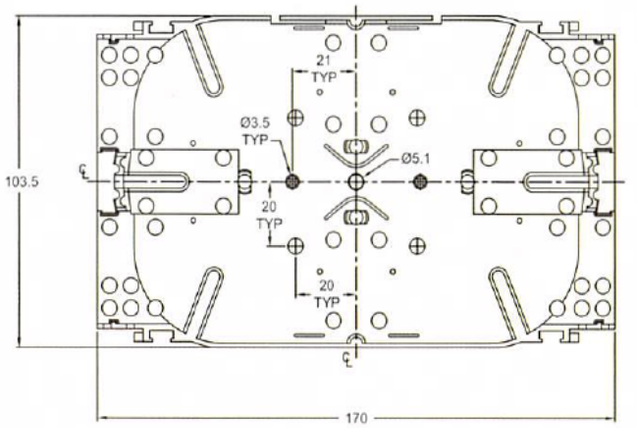

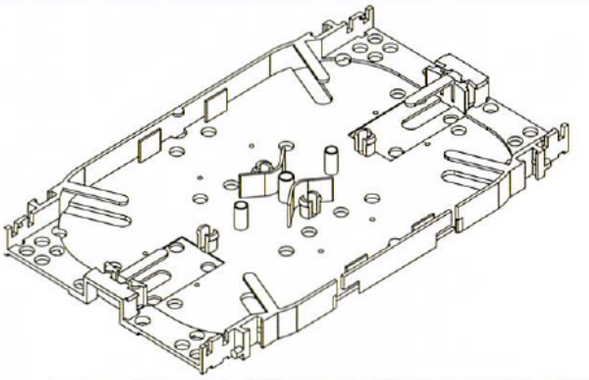

Miniflex Technology Manufactured by Richco		
Material: Glass-Filled UL94 V0 Nylon 6/6, RMS-104 Color: Black		
Part No.	**Tray Thickness**	**Standard Pack**
OFST-1-P	10	10
OFST-A-P-1	10	Kit Includes: 2 Red, 2 Green OFTSH-1 Hinges; 1 OFST-1-L; 1 OFST-1-P
All Dimensions in Millimeters		

800-621-1892
Angic Global Solutions 1-888-872-0690
https://www.AngicGlobal.com Sales@AngicGlobal.com
Get quote

OFSTH-1
Optical Fiber Splice Tray Hinge

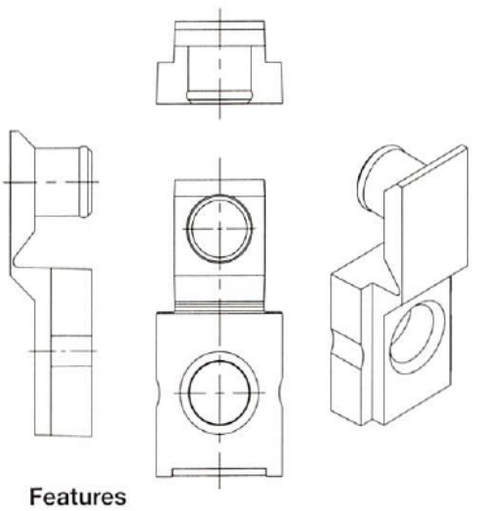

Features

- Used with OFST-1-X series on previous page

Miniflex Technology manufactured by Richco	
Material Mix: Polypropylene, RMS-150; TPE, RMS-182	
Standard Pack: 20 per bag	
Part Number	**Color**
OFSTH-1-RED	Red
OFSTH-1-GRN	Green

OFSH-6-3.5
Optical Fiber Splice Holder

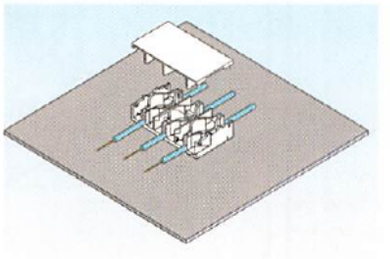

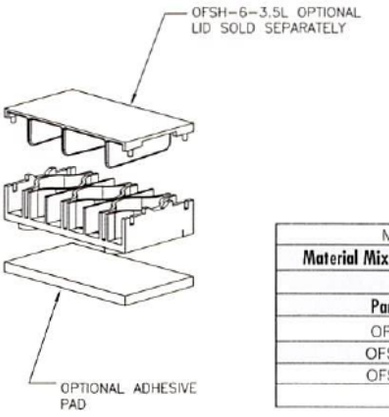

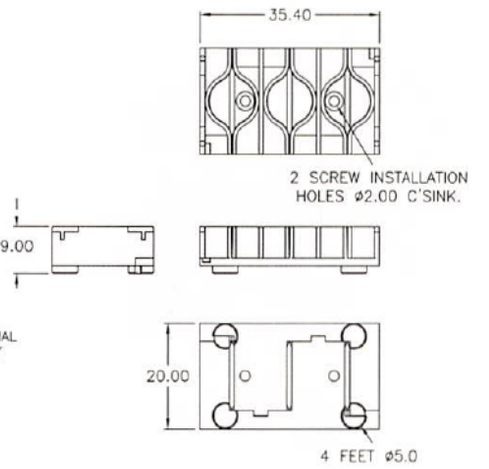

Miniflex Technology manufactured by Richco	
Material Mix: Polypropylene, RMS-150; TPE, RMS-182; Color: Natural	
Standard Pack: 10 per bag	
Part Number	**Adhesive**
OFSH-6-3.5	Without Adhesive
OFSH-6-3.5A	With Adhesive
OFSH-6-3.5L	Lid, Without Adhesive
All dimensions in millimeters	

OFSH-T
Splice Holder

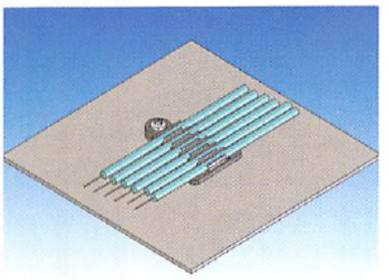

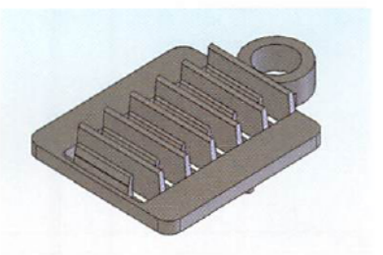

OFSH-T-6-01BLK

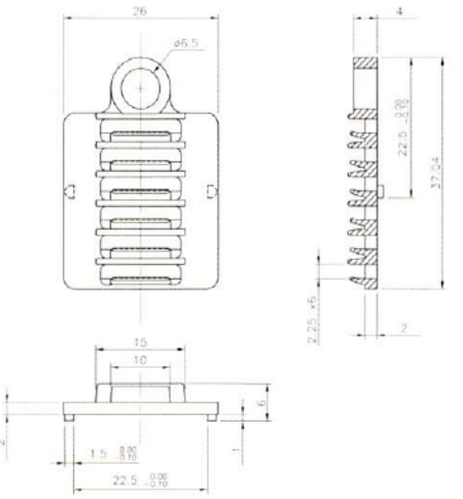

OFSH-T-12-01BLK

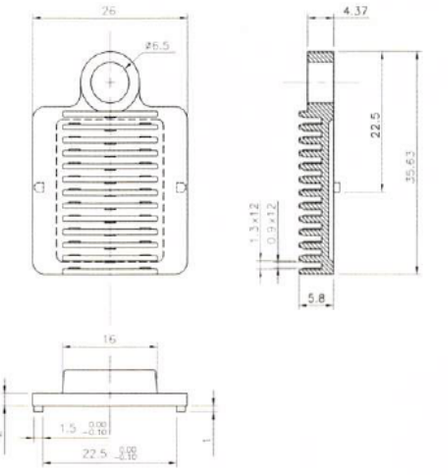

Features

- OFSH-T-6 designed to hold up to 6 x 3mm fiber or components, i.e. couplers, splice protectors (OFSP on page 191), and WDM's
- OFSH-T-12 designed to hold up to 12 crimp splice protectors
- OFSH-T Splice Holders can be used with OFST Series Splice Trays

Color: Black; Standard Pack: 100 per bag	
Part Number	**Material**
OFSH-T-6-01BLK	Nylon 6/6, RMS-01
OFSH-T-12-01BLK	
OFSH-T-6-19BLK	UL94 V0 Nylon 6/6, RMS-19
OFSH-T-12-19BLK	
All dimensions in millimeters	

J

Get quote
Angic Global Solutions 1-888-872-0690
https://www.AngicGlobal.com Sales@AngicGlobal.com

EFA04 25 001
Array Tray

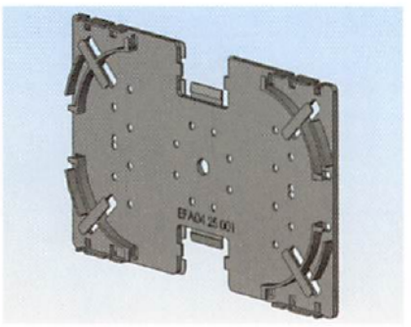

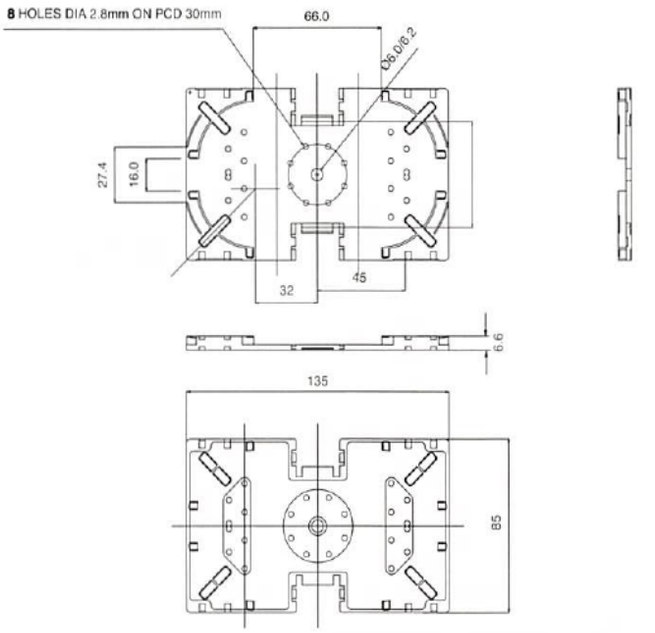

Features

- Molded-in features maintain bend radius at 30mm
- Accepts Isolator Clips EFA03 61, 63 and 64 001 (shown below) for holding splicing components
- Accepts 16-way Fiber Clip EFA04 06 and 08 001 (page 189) broken into a 4-way segment for holding splicing components

A Europlus/Richco Product
Material: UL94 V0 Nylon 6, RMS-178; Color: Black
Standard Pack: 50 per bag
EFA04 25 001
Parts are available by special order only. 500 piece minimum.
All dimensions in millimeters

EFA04 6X
Isolator Clips

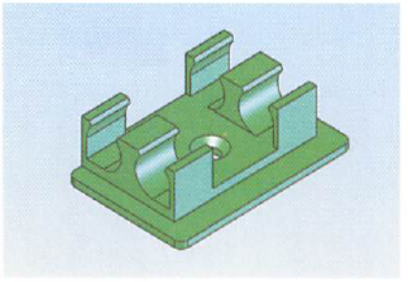

EFA04 61 001

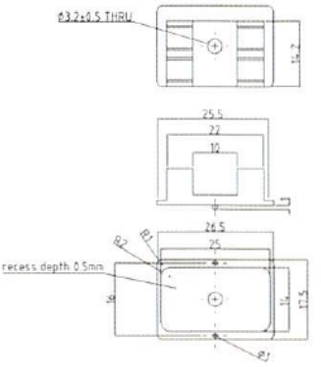

EFA04 63/64 001

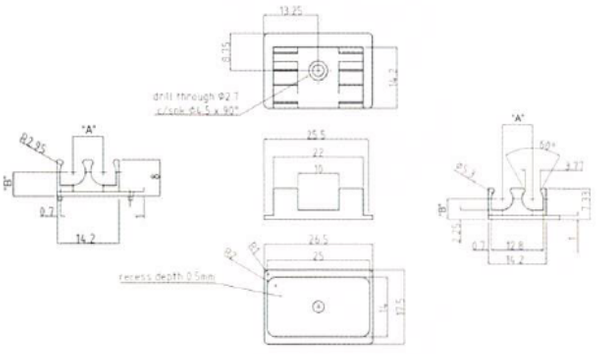

Features

- Designed to hold 6mm, 5.5mm or 4.5mm diameter components
- Designed for use in the Array Tray EFA04 25 001 (shown above)
- Can be screw or rivet mounted or mounted with self adhesive pads, please see Section C
- EFA04 61 001 has anti-rotation pins to securely mount when using screw or rivet

A Europlus/Richco Product				
Material: UL94 V0 Nylon 6, RMS-178				
Standard Pack: 100 per bag				
Part No.	**Contents**	**Color**	**"A"**	**"B"**
EFA04 61 001	6mm Isolator Clip	Red	6.9	5.3
EFA04 61 ASS	6mm Isolator Clip with adhesive pad			
EFA04 63 001	5.5mm Isolator Clip	Green	7.5	4.9
EFA04 63 ASS	5.5mm Isolator Clip with adhesive pad			
EFA04 64 001	4.5mm Isolator Clip	Yellow	8.5	5.3
EFA04 64 ASS	4.5mm Isolator Clip with adhesive pad			
All dimensions in millimeters				

J

800-621-1892
Get quote
Angic Global Solutions 1-888-872-0690
https://www.AngicGlobal.com Sales@AngicGlobal.com

EFA04 06/EFA04 08
16-Way Fiber Clips

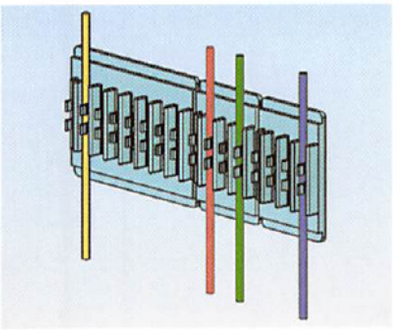

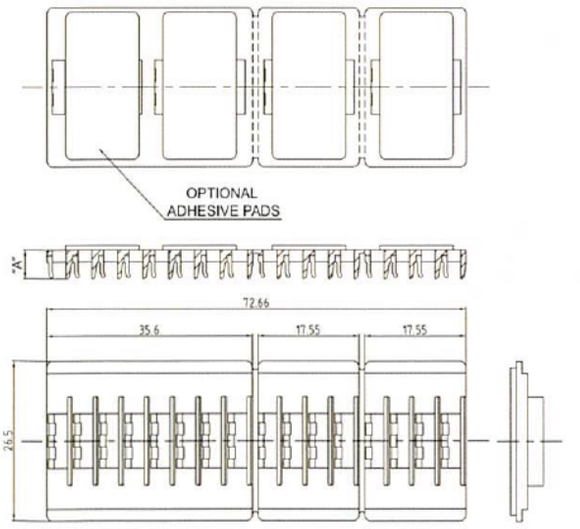

Features

- Can be broken apart to form 3 individual clips holding 4, 4 and 8 components
- A broken apart 4-way can be used in the Array Tray EFA04 25 001 (page 188)
- EFA04 06 designed to hold 3mm diameter fiber or components, i.e. couplers, splice protectors (OFSP on page 191), and WDM's
- EFA04 08 designed to hold 2mm diameter fiber or components, i.e. couplers, splice protectors (OFSP on page 191), and WDM's

A Europlus/Richco Product			
Material: UL94 V0 Nylon 6, RMS-178			
Standard Pack: 100 per bag			
Part No.	**Contents**	**Color**	**"A"**
EFA04 06 001	16-way 3mm fiber clip	Black	4.8
EFA04 06 ASS	16-way 3mm fiber clip with adhesive pad		
EFA04 08 001	16-way 2mm fiber clip	Blue	6.4
EFA04 08 ASS	16-way 2mm fiber clip with adhesive pad		
All dimensions in millimeters			

OFSH-4
Optical Fiber Splice Holder

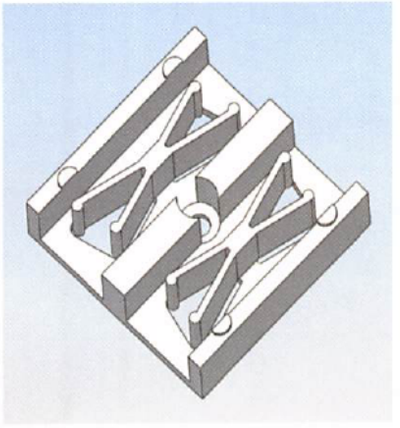

OFSH-4-1

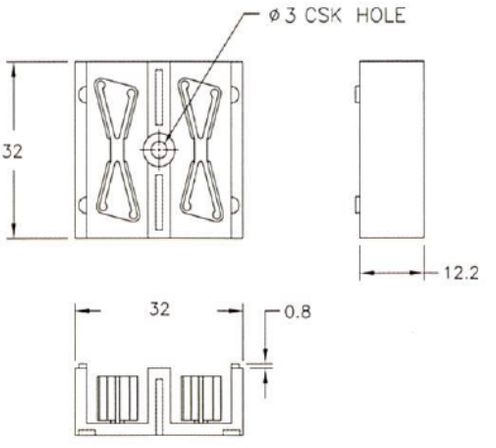

OFSH-4-2

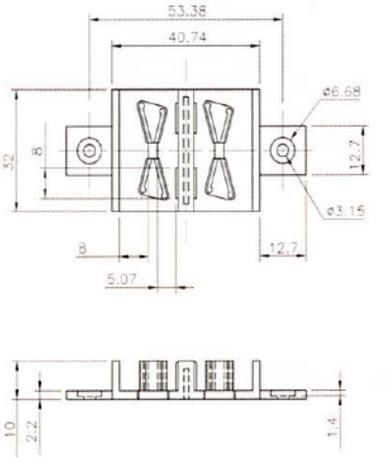

Features

- Holds 12 x 2.7mm or 4 x 4.2mm splices
- Ability to stack with M3 screws or rivets, see Section C
- Secures optical splices in an efficient and compact manner while still maintaining integrity
- Fastens with either a self-adhesive pad, provided, or via a screw or rivet

Features

- Holds 2 splices from Ø3.8 - 5.72mm and 2 from Ø5.72 - Ø8mm
- Mounts with 2 SRV0-3055 snap rivets, see page 52

Color: Natural; Standard Pack: 50 per bag	
Part Number	**Material**
OFSH-4-1-01LA	Nylon 6/6, RMS-01
OFSH-4-1-19LA	UL94 V0 Nylon 6/6, RMS-19
OFSH-4-2-19	
Dimensions in millimeters	

J

539-4060 Sam
Get quote
Angic Global Solutions 1-888-872-0690
https://www.AngicGlobal.com Sales@AngicGlobal.com

EFA04 02 ASS
Fiber Clip

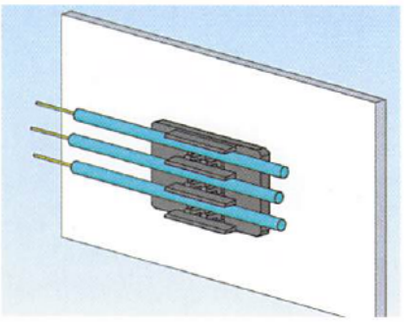

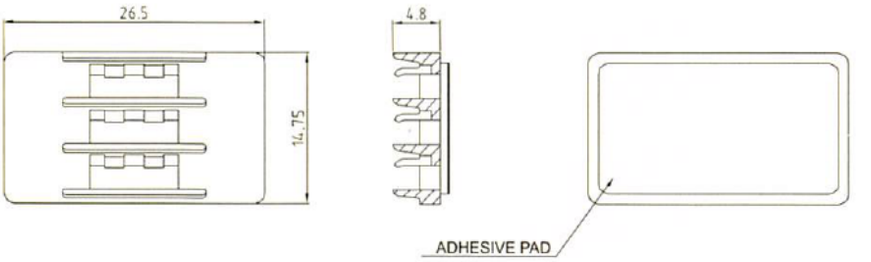

Features
- Designed to hold 3mm diameter fiber or components, i.e. couplers, splice protectors (OFSP on page 191), and WDM's
- Comes with self adhesive pad for quick and easy mounting

A Europlus/Richco Product	
Material: UL94 V0 Nylon 6, RMS-178 Color: Black	
Standard Pack: 100 per bag	
Part Number	**Contents**
EFA04 02 ASS	3mm fiber clip with adhesive pad
All dimensions in millimeters	

EFA04 18/EFA04 71
Coupler Clip

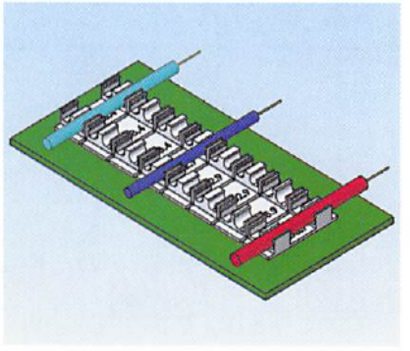

EFA04 18

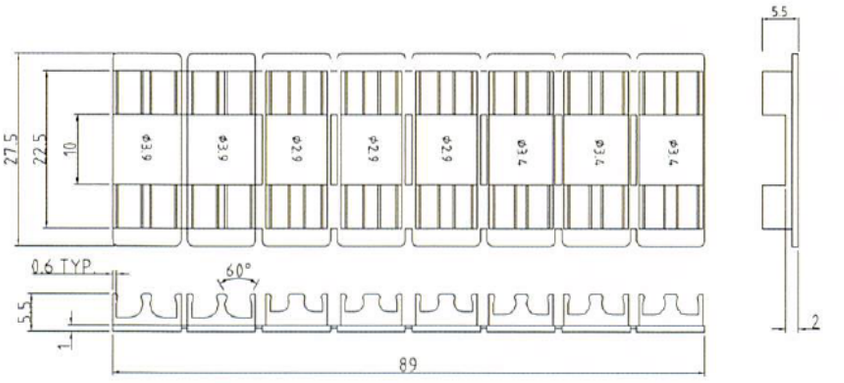

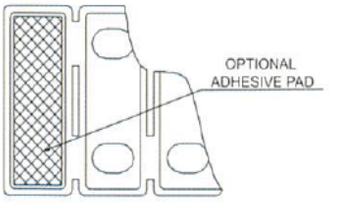

Features
- Designed to hold up to 4 x Ø3.9mm, 6 x Ø2.9mm, or 6 x Ø3.4mm couplers or components
- EFA04 18 can be broken apart to form individual clips

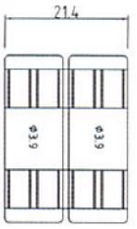

EFA04 71 X03
Ø3.9 Coupler Clip

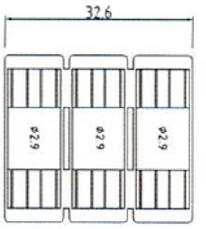

EFA04 71 X01
Ø2.9 Coupler Clip

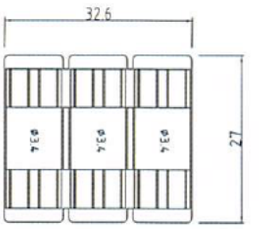

EFA04 71 X02
Ø3.4 Coupler Clip

A Europlus/Richco Product	
Material: UL94 V0 Nylon 6, RMS-178 Color: Black	
Standard Pack: 100 per bag	
Part No.	**Contents**
EFA04 18 001	4-way 3.9mm x 6-way 3.4mm x 6-way 2.9mm coupler clips
EFA04 18 ASS	EFA04 18 001 with 8 adhesive pads
EFA04 71 001	6-way 2.9mm coupler clip
EFA04 71 P01	EFA04 71 001 with 3 adhesive pads
EFA04 71 002	6-way 3.4mm coupler clip
EFA04 71 P02	EFA04 71 002 with 3 adhesive pads
EFA04 71 003	4-way 3.9mm coupler clip
EFA04 71 P03	EFA04 71 003 with 2 adhesive pads
Parts are available by special order only. 500 piece minimum.	
All dimensions in millimeters	

J

800-621-1892
Get quote
Angic Global Solutions 1-888-872-0690
https://www.AngicGlobal.com Sales@AngicGlobal.com

OFSP/ROFSP

Optical Fiber & Ribbon Fiber Splice Protector

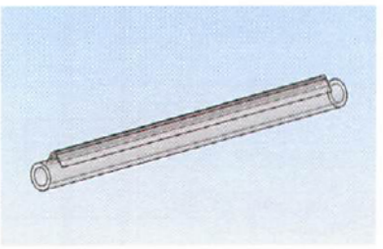

Features

- Splice region becomes mechanically and environmentally protected
- ROFSP for ribbon or flat fiber splice protection, can be used with EFA04 61 isolator clip, see page 188
- OFSP-08 for space saving miniature splice protection
- Custom lengths available by special order

Description

Richco's Optical Fiber Splice Protector provides excellent protection and support for fiber optic heat fusion splices. The OFSP is assembled with a stainless steel backbone and a meltable inner liner. When installed over a heat fusion splice, all insulation and mechanical properties are restored while creating an impervious barrier around the splice region

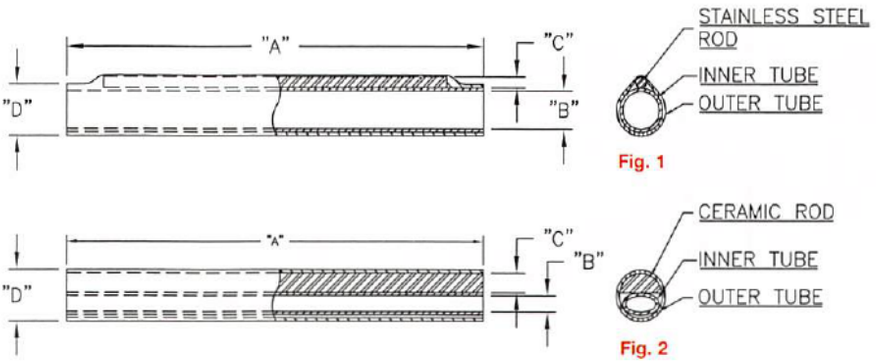

Material: Outer Tube - Heatshrink 3:1 Ratio Cross-Linked Modified Polyolefin; INNER TUBE - Modified PE Copolymer Adhesive; ROD - Stainless Spring Steel to BS & ASA 2056 Type 302 S 26 • Color: Clear					
	Standard Pack: 100 per bag				
Part No.	Nominal Sleeve Length "A" Ref.	Inner Tube Dia. Min. "B"	Nominal Rod Dia. "C"	Recovered Dia. "D" Ref.	Figure No.
OFSP-10-25*	.98 (25)	.06 (1.5)	.04 (1)	.09 (2.4)	1
OFSP-10-30*	1.18 (30)				
OFSP-10-35*	1.38 (35)				
OFSP-10-40*	1.57 (40)				
OFSP-10-45*	1.77 (45)				
OFSP-10-61*	2.4 (61)				
OFSP-15-40*	1.57 (40)	.06 (1.5)	.06 (1.5)	.11 (2.8)	
OFSP-15-61*	2.4 (61)				
OFSP-08-25	.98 (25)	.02 (0.5)	.03 (0.8)	.06 (1.6)	
OFSP-08-40	1.57 (40)				
ROFSP-40-40**	1.57 (40)	.14 X .04 (3.6 X 1)	.16 X .07 (4 X 1.8)	.20 X .12 (5 X 3)	2
*Black (BLK), Brown (BRN), Green (GRN), Blue (BLU), Light Blue (LBL), Yellow (YEL), Red (RED), Pink (PNK), Orange (ORG), Violet (VIO), Gray (GRY) and White (WHT), available by Special Order only.					
** Rod Material: Ceramic					
Parts are available by special order only. 1,000 piece minimum.					

EFA04 12 ASS

900 Micron Buffered 15-Way Fiber Clip

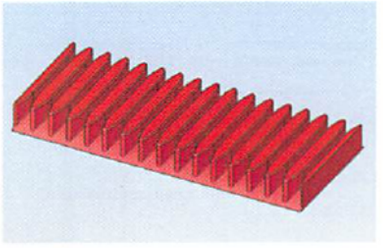

Features

- Designed for easy routing of up to 15 x 900 micron fibers
- Quick and easy self adhesive mounting

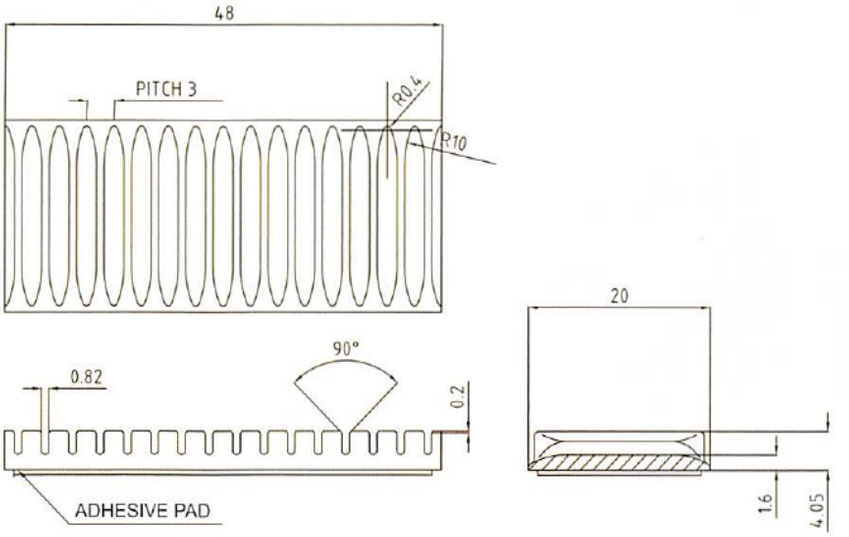

A Europlus/Richco Product
Material: Polypropylene; Color: Red
Standard Pack: 100 per bag
EFA04 12 ASS
Parts are available by special order only. 500 piece minimum.
All dimensions in millimeters

J

539-4060 Sam
Angic Global Solutions 1-888-872-0690
https://www.AngicGlobal.com Sales@AngicGlobal.com
Get quote

OFFM

Optical Fiber Flat Manifold

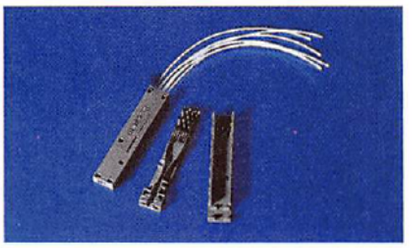

Miniflex Technology manufactured by Richco - Patented	
Material: Glass-filled PBT UL94 V0; Color: Charcoal Gray	
Standard Pack: 10 per bag	
Part No.	**Supplied With**
OFFM-4-1	Manifold and 4 PTFE tubes, 1 meter long each
OFFM-6-1	Manifold and 6 PTFE tubes, 1 meter long each
OFFM-8-1	Manifold and 8 PTFE tubes, 1 meter long each
OFFM-8-2	Manifold and 8 PTFE tubes, 2 meters long each
OFFM-1-12	Bag of 10 manifolds and 10 coils, 12m per coil

Material: PTFE UL94 V0; Color: Natural; RMS-291
Standard Pack: 120 meter coil per bag
PTFE-1-120-NAT
Other colors are available by special order.

Features

- Maximum of 12 fibers
- Ability to stack
- Fiber threading guide system in lid
- Can be terminated to OFBLT protective tubing (see page 203) or standard cable element tubing.
- Silicone sleeve is provided to give added grip to cope with variations in element tube diameters
- A range of flanged termination crimp kits (OFTK Series) are available to give a strong, mechanical anchorage for common size element/blown fiber tubing and OFBLT, contact your local Richco office for further information

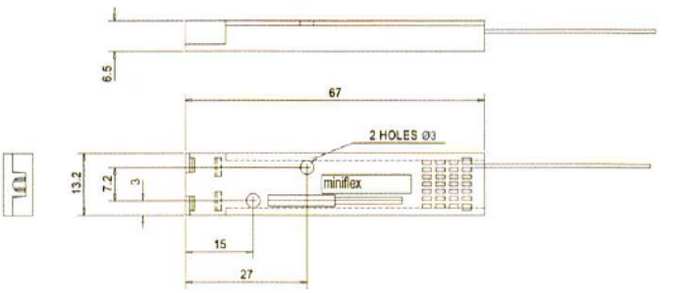

Description

The Optical Fiber Flat Manifold has the ability to breakout and protect primary fiber from cable element tubing, ribbon fiber or a blown fiber unit. The input fiber tube is secured by a clamping system molded into the product. Each output fiber is protected in a 900 µm PTFE tube, also secured by a molded detail. Threading the fiber is achieved by the effective guide provided in the snap-on lid. Assembly of the manifold is made easy by a simple "lay-through" design, which prevents fiber kinking or breakage.

Installing fiber is easy, clean, neat and extremely compact while still controlling all bend radii. Mounts with the self-adhesive pad provided or by the integral screw holes, which give the ability to stack.

OFFM-MK2

Optical Fiber Flat Manifold

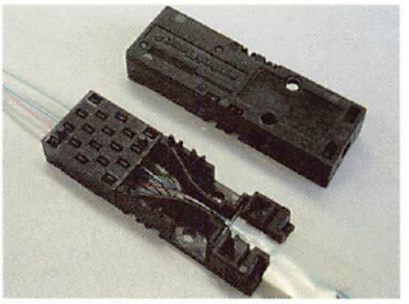

Features

- Maximum of 12 fibers
- Ability to stack
- Fiber threading guide system in lid
- Can be terminated to OFBLT protective tubing (see page 203) or standard cable element tubing.
- Silicone sleeve is provided to give added grip to cope with variations in element tube diameters
- A range of flanged termination crimp kits (OFTK Series) are available to give a strong, mechanical anchorage for common size element/blown fiber tubing and OFBLT, contact your local Richco office for details
- Enables pre-assembly of PTFE tubes in complete pack, and alternative method of fiber feed/assembly
- Supplied with adhesive ribbon fiber adapter to accept ribbon fiber
- Molded detail that secures 900 micron PTFE tubing is separate from body and cover for ease of handling

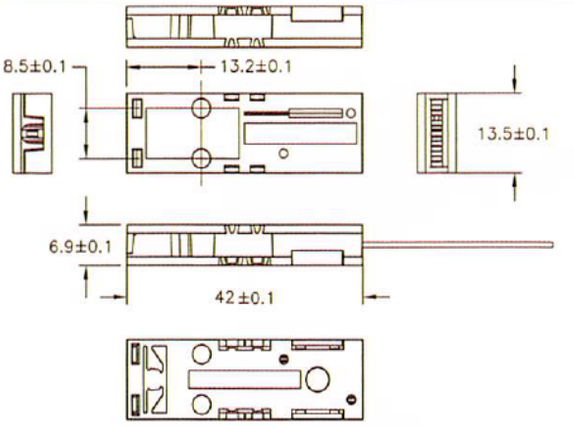

Miniflex Technology manufactured by Richco	
Material: 6% Glass Reinforced PBT UL94 V0; Color: Charcoal Gray	
Standard Pack: 10 per bag	
Part Number	**Supplied With**
OFFM-MK2-10-40 Gray	900 Micron PTFE, RMS-291 tube in 40M pull out pack
All dimensions in millimeters	

Material: PTFE UL94 V0; Color: Natural; RMS-291
Standard Pack: 120 meter coil per bag
PTFE-1-120-NAT
Other colors are available by special order.

800-621-1892
Get quote
Angic Global Solutions 1-888-872-0690
https://www.AngicGlobal.com Sales@AngicGlobal.com

EFA70 07 001
Strain Relief Boot
900 Micron Fiber



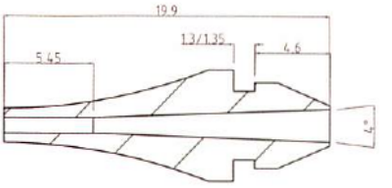

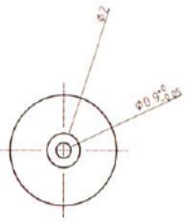

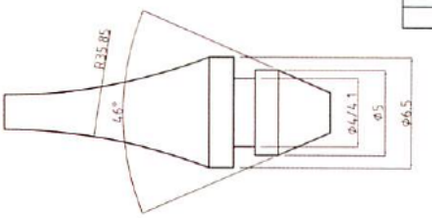

A Europlus/Richco Product
Material: TPE, RMS-185; Color: Black
Standard Pack: 500 per bag
EFA70 07 001
All dimensions in millimeters

Features
- Provides added protection to 900 micron fiber while routing through a hole

EFA70 01 XXX
900 Micron Boot

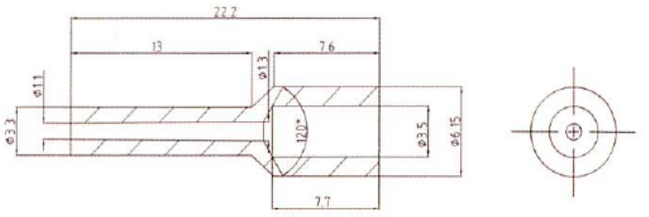

A Europlus/Richco Product	
Material: TPE, RMS-185	
Standard Pack: 500 per bag	
Part Number	Color
EFA70 01 001	Black
EFA70 01 002	Blue
EFA70 01 003	Green
EFA70 01 004	Red
EFA70 01 005	White
All dimensions in millimeters	
Parts are available by special order only. 1,000 piece minimum.	

EFA70 02 XXX
Short Buffered Fiber Boot

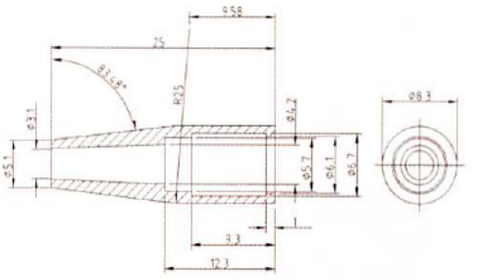

A Europlus/Richco Product	
Material: TPE, RMS-185	
Standard Pack: 500 per bag	
Part Number	Color
EFA70 02 001	Black
EFA70 02 002	Green
EFA70 02 003	Beige
EFA70 02 004	Red
All dimensions in millimeters	
Parts are available by special order only. 1,000 piece minimum.	

EFA52 XX ASS
Quick Panel Mount Strain Relief Gland

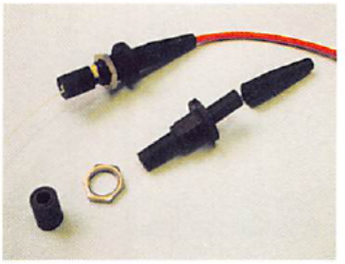

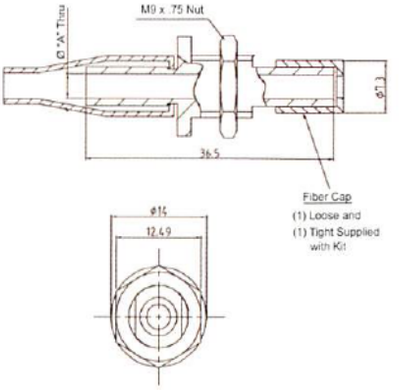

Features
- Provides added protection to jacketed and bare fiber while routed through a hole

A Europlus/Richco Product	
Material: UV94 V0 Nylon 6, RMS-178; Color: Black	
Standard Pack: 250 per bag	
Part Number	"A"
EFA52 02 ASS	3.5
EFA52 05 ASS	2.5
All dimensions in millimeters	

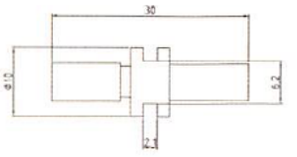

EFA52 03 ASS
Quick Panel Mount Strain Relief Gland, Slot in Version

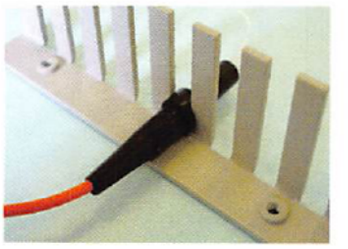

A Europlus/Richco Product
Material: UL94 V0 Nylon 6, RMS-178; Color: Black
Standard Pack: 250 per bag
EFA52 03 ASS
All dimensions in millimeters

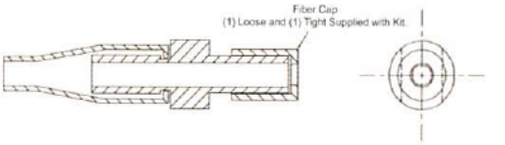

J

ANGIC
Get quote
Angic Global Solutions 1-888-872-0690
https://www.AngicGlobal.com Sales@AngicGlobal.com

OFCC/OFCG
Optical Fiber Coiling Clip

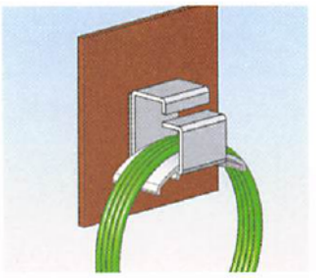

Fig. 1

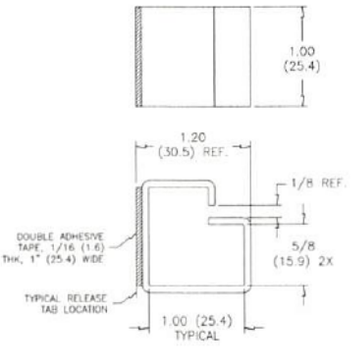

Fig. 2

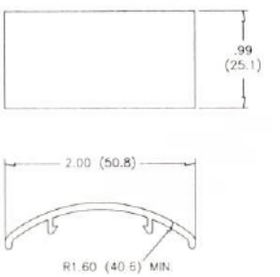

Features

- Two extruded clips snap into each other to form a clip with a smooth, curved surface to accommodate fiber optic bundles
- Part wall thickness: .070 (1.8) typical

Material: Rigid PVC, RMS-04; Adhesive, RMS-15; Color: Black	
Standard Pack: 100 per bag	
Part Number	Figure
OFCC-16-A-RT	1
OFCG-16	2

OFCP-50-19
Chain Plate

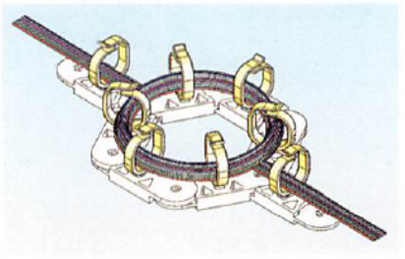

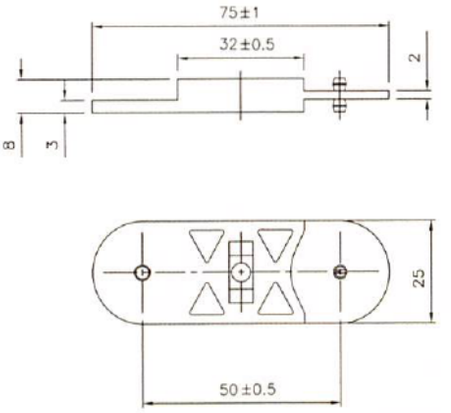

Features

- Connect multiple OFCP's together to form a "chain" for routing fiber
- Complete the circle for an excess fiber spool to form a "Y" for breakout points
- All connections maintain a bend radius greater than 30mm
- Ø4.75mm center mounting hole to fit any standard Richco routing component

Material: UL94 V0 Nylon 6/6; RMS-19; Color: White
Standard Pack: 500 per bag
OFCP-50-19
All dimensions in millimeters
Parts are available by special order only. 1,000 piece minimum.

OFHB3-4-19A-RT
Optical Fiber Holder on Base, 3mm

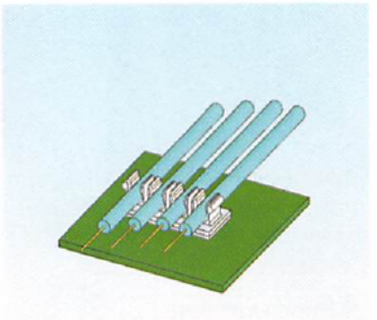

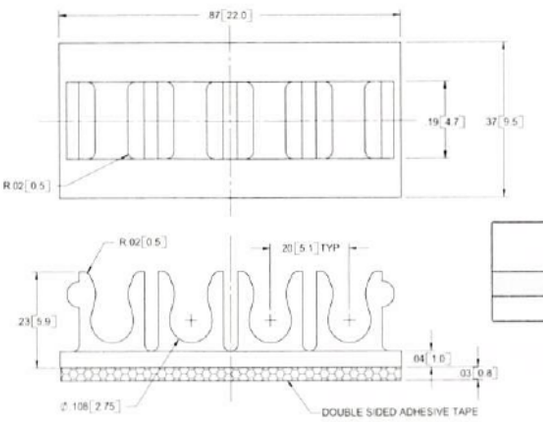

Material: UL94 V0 Nylon, RMS-19 Color: Natural
Standard Pack: 1,000 per bag
Adhesive Backing, RMS-15

Features

- Designed to hold up to 4 x Ø.118 (3) cables

800-621-1892
Get quote
Angic Global Solutions 1-888-872-0690
https://www.AngicGlobal.com Sales@AngicGlobal.com

OFSB

Optical Fiber Support Base

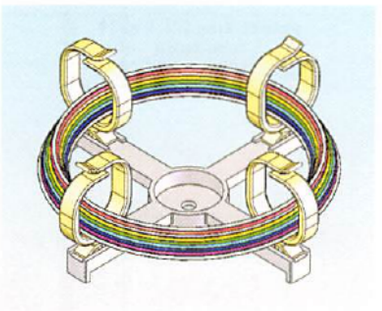

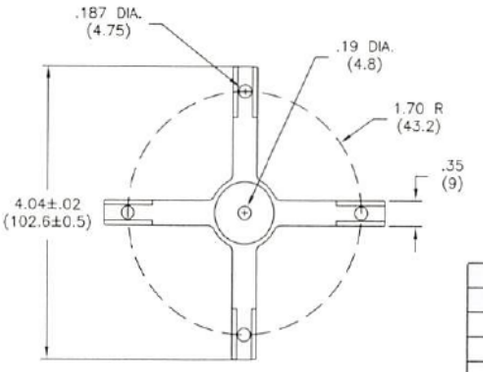

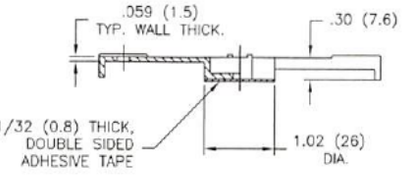

MOUNTING RIVETS FOR THE OFSB		
Part No.	Hole Dia.	Panel Thickness Range
SR-5045	.201-.205 (5.1-5.2)	.059-.098 (1.5-2.5)
SR-5055		.098-.138 (2.5-3.5)
SR-5065		.138-.177 (3.5-4.5)
SR-5075		.177-.217 (4.5-5.5)
SR-5085		.217-.256 (5.5-6.5)
SR-5095		.256-.295 (6.5-7.5)
SR-5105		.295-.335 (7.5-8.5)
See page 52		

Features

- Constructs a path for spooling fiber optic cables
- Designed for use in fiber optic patch panel applications
- Central hole for rivet or screw mount
- Base is available with or without tape
- Has .187 (4.75) hole on legs to allow for any number of Richco wiring products

Mat'l: Nylon 6/6 RMS-01; Color: Natural	Mat'l: UL94 V0 Nylon 6/6 RMS-19; Color: Natural	Standard Pack: 100 per bag
		Mounting Style
OFSB-4-85-01A	OFSB-4-85-19A	Adhesive Tape
OFSB-4-85-01	OFSB-4-85-19	Screw Mount
Adhesive Backing: RMS-15, 1/32 (0.8) thick double adhesive tape with release tab		

OFNS

Optical Fiber Network Saddle



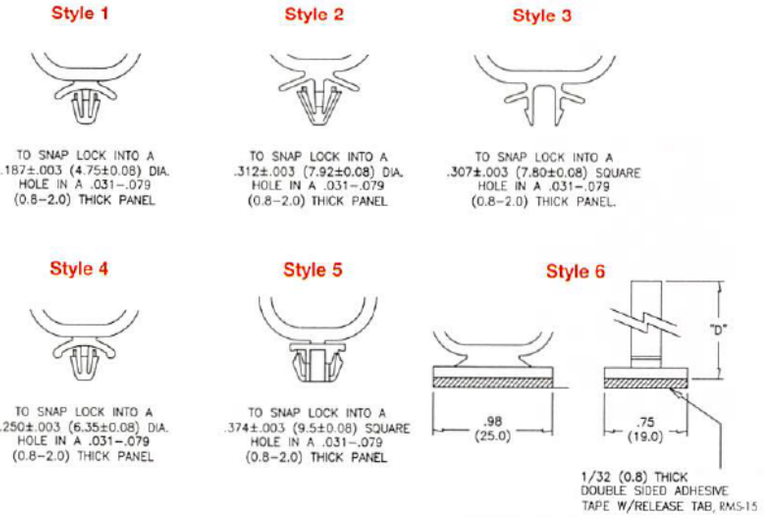

Features

- No stress applied to fiber upon entry
- Smooth rounded corners
- Six different mounting styles

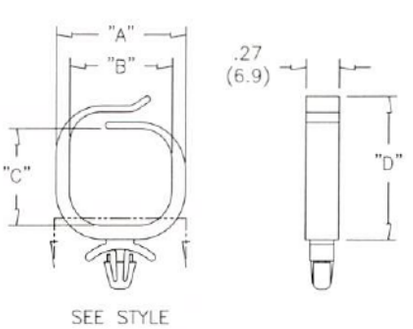

Color: Natural						
Part No.		Standard Pack: 1,000 per bag				
Nylon 6/6, RMS-01	UL94 V0 Nylon, RMS-19	"A" Ref.	"B" Ref.	"C" Ref.	"D" Ref.	Style
OFNS-13-187-01	OFNS-13-187-19	1.06 (26.8)	.83 (21.2)	.75 (19)	1.11 (28.2)	1
OFNS-13-312-01	OFNS-13-312-19					2
OFNS-13-250-01	OFNS-13-250-19					4
OFNS-13-S9.5M-01	OFNS-13-S9.5M-19					5
OFNSB-13-01A-RT	OFNSB-13-19A-RT				1.29 (32.7)	6
OFNS-16-187-01	OFNS-16-187-19	1.35 (34.3)	1.13 (28.7)	.99 (25.1)	1.35 (34.4)	1
OFNS-16-312-01	OFNS-16-312-19					2
OFNS-16-S307-01	OFNS-16-S307-19					3
OFNS-16-S9.5M-01	OFNS-16-S9.5M-19					5
OFNSB-16-01A-RT	OFNSB-16-19A-RT				1.53 (38.9)	6

J

39-4060 Samp
Get quote
Angic Global Solutions 1-888-872-0690
https://www.AngicGlobal.com Sales@AngicGlobal.com

OFHB2-4A1-RT-19

Optical Fiber Holder on Base, 2mm

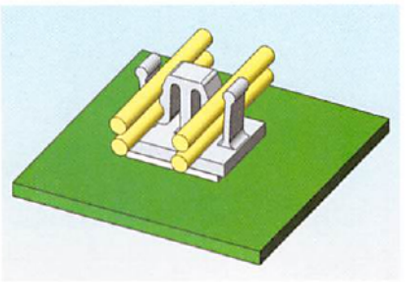

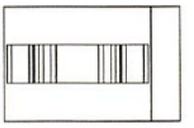

Material: Nylon 6/6, RMS-19 Color: Natural
Standard Pack: 1,000 per bag

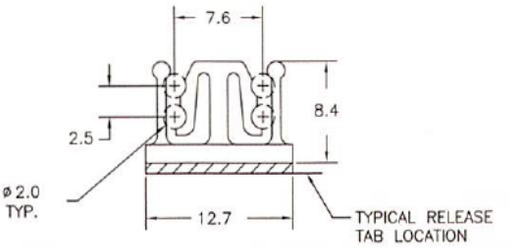

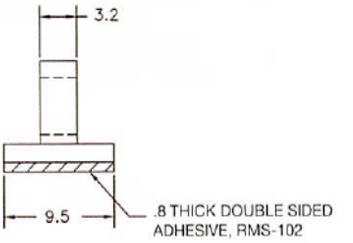

Features

- Designed to hold up to 4 x Ø.079 (2) fiber cables

OFB-BH-6-19

Optical Fiber Bracket, Blind Hole

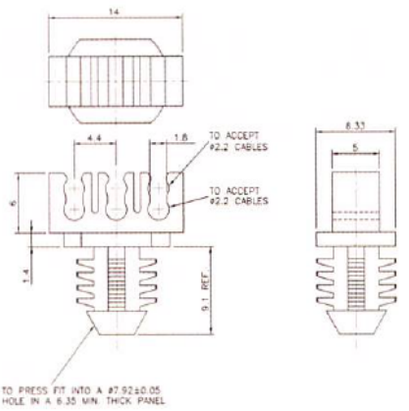

Material: UL94 V0 Nylon, RMS-19 Color: Natural
Standard Pack: 1,000 per bag
Dimensioned in millimeters

Features

- Designed to hold up to 6 x Ø.079 (2) fiber cables

OFEB-3-19

Optical Fiber Expandable Bracket

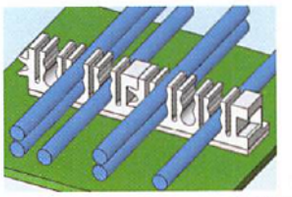

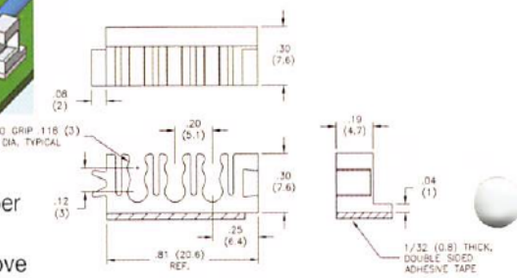

Features

- Designed to hold up to 6 x Ø.118 (3) fiber optic cables
- Cable snaps into groove easily without damaging fiber
- Brackets connect easily to each other to provide for additional cables

Material: UL94 V0 Nylon, RMS-19 Color: Natural
Standard Pack: 1,000 per bag
Adhesive Backing, RMS-15

OFB3P-4-19

Optical Fiber Bracket, 3mm, Plug-In, 4 Slot

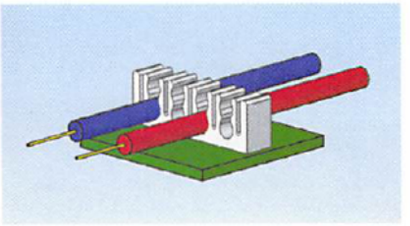

Features

- Designed to hold up to 8 x Ø.118 (3) fiber cables
- Anti-rotation pin prevents fiber kinking due to bracket turning in the mounting hole

Material: Nylon 6/6 UL94 V0, RMS-19 Color: Natural
Standard Pack: 1,000 per bag

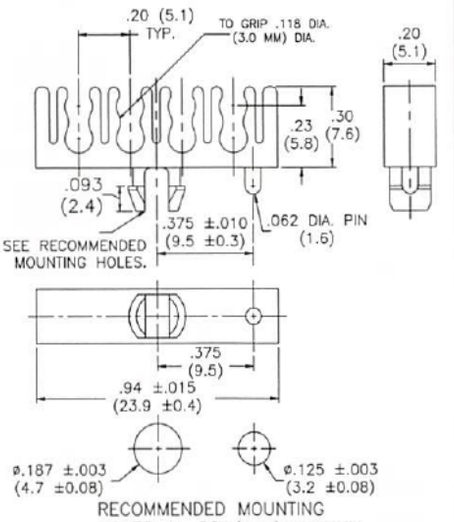

OFDS-1

Optical Fiber Duplex Splitter

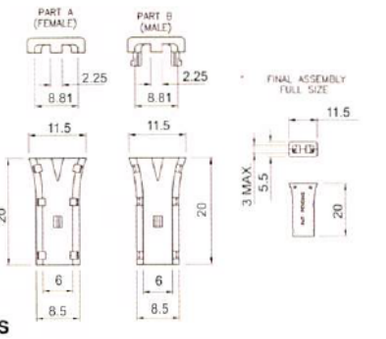

Features

- For use on 3.0mm dual patch cord fibers to stop continued pigtail splitting
- Two-piece design snaps together

Material: ABS • Color: Black
Standard Pack: 1,000 of each per bag
Dimensions in millimeters
Available by special order only. 5,000 piece minimum.

J

1-800-621-1892
Get quote
Angic Global Solutions 1-888-872-0690
https://www.AngicGlobal.com Sales@AngicGlobal.com

EFA02
Dust Caps with Flexible Ties



Features

- Provides environmental protection to connectors and adapters
- Offered in various colors and materials
- Flexible tie keeps dust cap from being lost when not in use

Flexible Tie

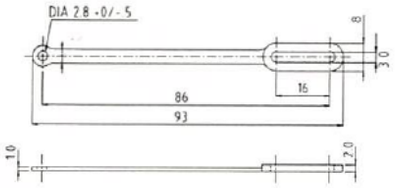

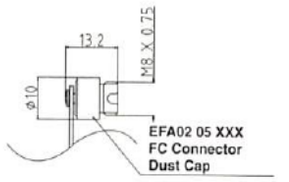

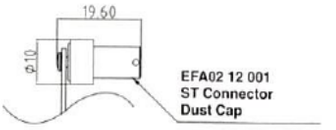

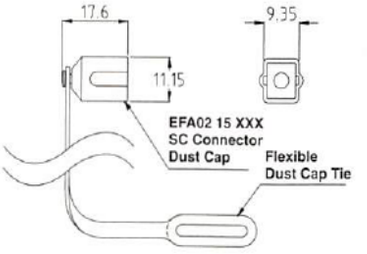

A Europlus/Richco Product Material: Cap - High Density Polyethylene, RMS-183, Tie-Flexible PVC, RMS-186 Color: Black Standard Pack: 250 per bag		
Part No.	**Contents**	**Cap Color**
EFA02 05 001	FC Connector Dust Cap	Black
EFA02 05 004		Green
EFA02 05 005		Red
EFA02 05 006		Blue
EFA02 05 ASS	EFA02 05 Dust Cap with Tie	Black
EFA02 05 ASG		Green
EFA02 05 ASB		Blue
EFA02 05 ASR		Red
EFA02 12 001	ST Connector Dust Cap	Black
EFA02 12 ASS	EFA02 12 Dust Cap with Tie	Black
Parts are available by special order only. 500 piece minimum.		
All dimensions in millimeters		

A Europlus/Richco Product Material: Cap - PVC, RMS-191, Tie-Flexible PVC, RMS-186 Color: Black Standard Pack: 250 per bag		
Part No.	**Contents**	**Cap Color**
EFA02 15 001	SC Connector Dust Cap	Black
EFA02 15 002		Blue
EFA02 15 003		Green
EFA02 15 ASS	EFA02 15 Dust Cap with Tie	Black
EFA02 15 ASG		Green
EFA02 15 ASB		Blue
Parts are available by special order only. 500 piece minimum.		
All dimensions in millimeters		

EFA02
Dust Caps with Metal Chain



Features

- Stainless steel dust caps for harsh environments
- Chain keeps dust cap from being lost when not in use
- The mounting hole for EFA02 14 is a blind hole and does not expose the adapter/connector and can be used on its own. Other dust caps in this series require the retaining chain and cannot be sold separately, as this leaves a hole exposing the connector/adapter.

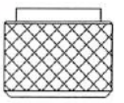

EFA02 04 ASS
SMA Adapter Dust Cap Assembly



EFA02 09 ASS
FC Adapter Dust Cap Assembly



EFA02 10 ASS/EFA02 50 ASS
ST Adapter Dust Cap Assembly

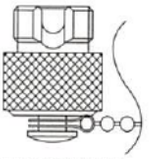

EFA02 27 ASS
FC Connector Dust Cap Assembly



EFA02 07 ASS
DIN Adapter Dust Cap Assembly

Typical Assembly for EFA02 Series
Dust Caps with Metal Chains

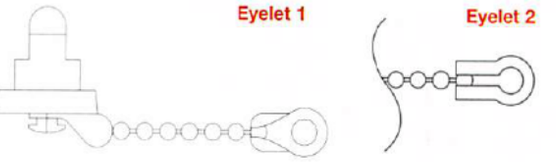

EFA02 14 ASS
SC Adapter Dust Cap Assembly

A Europlus/Richco Product Material: Cap & Chain - Stainless Steel; Color: Silver Standard Pack: 100 per bag		
Part Number	**Contents**	**Eyelet**
EFA02 04 ASS	EFA02 04 Dust Cap and Chain	1
EFA02 07 ASS	EFA02 07 Dust Cap and Chain	1
EFA02 09 ASS	EFA02 09 Dust Cap and Chain	1
EFA02 10 ASS	EFA02 10 Dust Cap and Chain	1
EFA02 27 002	EFA02 27 Dust Cap	-
EFA02 27 ASS	EFA02 27 Dust Cap and Chain	2
EFA02 50 ASS	EFA02 10 Dust Cap and Chain	2
Parts are available by special order only. 500 piece minimum.		

A Europlus/Richco Product Material: Cap - TPE, RMS-185; Chain - Stainless Steel; Color: Silver Standard Pack: 250 per bag			
Part No.	**Contents**	**Cap Color**	**Eyelet**
EFA02 14 001	SC Adapter Dust Cap	Black	N/A
EFA02 14 004		Blue	N/A
EFA02 14 ASS	EFA02 14 001 Dust Cap and Chain	Black	1

J

539-4060 Samp
ANGIC
Get quote
Angic Global Solutions 1-888-872-0690
https://www.AngicGlobal.com Sales@AngicGlobal.com

EFA02 03 XXX
FC Adapter Dust Cap

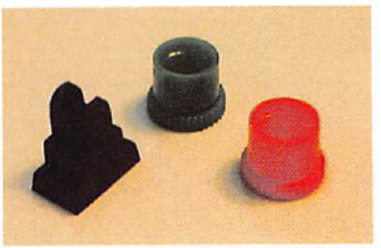

Features

- Provides environmental protection to connectors and adapters

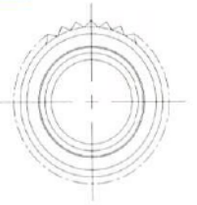

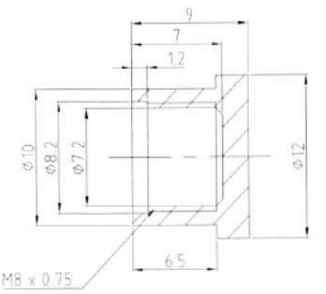

A Europlus/Richco Product	
Material: High Density Polyethylene, RMS-183	
Standard Pack: 500 per bag	
Part Number	**Color**
EFA02 03 001	Natural
EFA02 03 002	Black
EFA02 03 003	Green
EFA02 03 004	White
EFA02 03 005	Red
All dimensions in millimeters	

EFA02 06 XXX
FC Connector Dust Cap

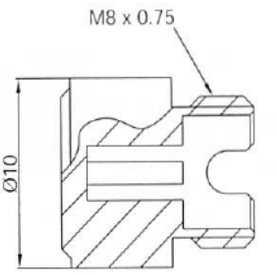

A Europlus/Richco Product	
Material: High Density Polyethylene, RMS-183	
Standard Pack: 500 per bag	
Part Number	**Color**
EFA02 06 001	Black
EFA02 06 002	Blue
All dimensions in millimeters	

EFA02 18 XXX
FC Adapter Dust Cap

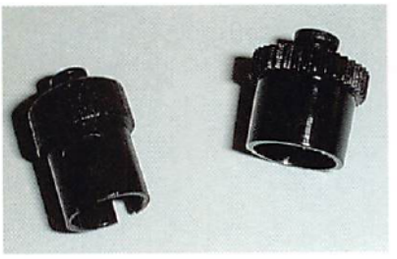

Features

- Provides environmental protection to adapters
- Molded-in "mushroom" head is perfect for attaching retaining tie

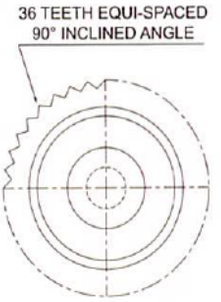

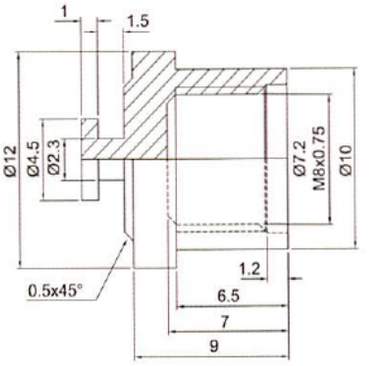

A Europlus/Richco Product	
Material: High Density Polyethylene, RMS-183	
Standard Pack: 250 per bag	
Part Number	**Color**
EFA02 18 001	Black
EFA02 18 002	Red
EFA02 18 003	Green
All dimensions in millimeters	

EFA02 19 001
ST Adapter Dust Cap

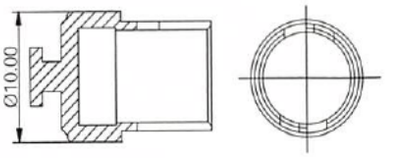

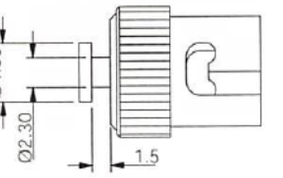

A Europlus/Richco Product
Material: High Density Polyethylene, RMS-183
Color: Black
Standard Pack: 250 per bag
EFA02 19 001
Parts are available by special order only. 500 pieces minimum.
All dimensions in millimeters

J

1-800-621-1892
Get quote
Angic Global Solutions 1-888-872-0690
https://www.AngicGlobal.com Sales@AngicGlobal.com

EFA02 XX XXX
Flexible Dust Cap Tie



FIGURE 1

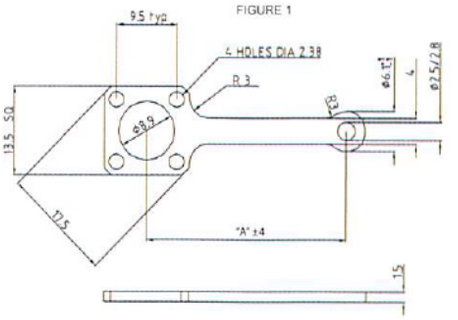

FIGURE 2

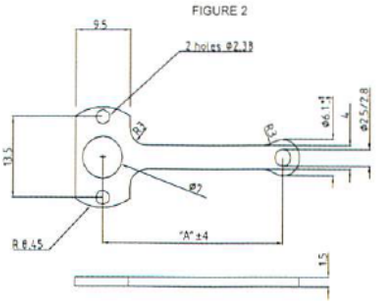

FIGURE 3

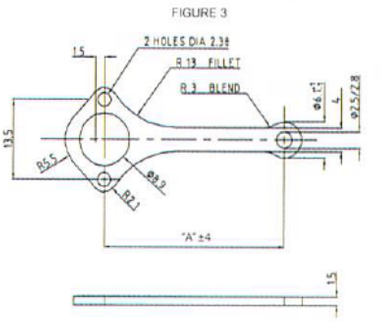

Features

- Flexible dust cap ties can be used with the following dust cap series: EFA02 05 XXX, EFA02 12 XXX; EFA02 15 XXX, EFA02 18 XXX, EFA02 19 XXX.
- Ties and dust caps are sold separately.

A Europlus/Richco Product		
Material: PVC, RMS-186; Color: Black		
Standard Pack: 250 per bag		
Flexible Tie Part No.	**Figure**	**"A"**
EFA02 XX 101	1	31.75
EFA02 XX 102		40
EFA02 XX 103		55
EFA02 XX 201	2	31.75
EFA02 XX 202		40
EFA02 XX 203		55
EFA02 XX 301	3	30
EFA02 XX 302		38
EFA02 XX 303		50.5
Parts are available by special order only. 500 piece minimum.		
All dimensions in millimeters		

EFA02 43 XXX
Adapter Dust Cap



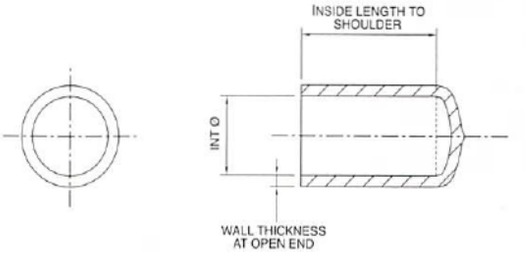

Features

- Provides environmental protection for SMA, ST and FC adapters

A Europlus/Richco Product				
Material: PVC, RMS-187; Color: Black				
Standard Pack: 500 per bag				
Part No.	**Contents**	**Inside Length to Shoulder (± 2.0)**	**Internal Dia. (±0.10)**	**Wall Thickness at Open End**
EFA02 43 001	SMA Connector Adapter Dust Cap	12.7	3	10 ± 0.25
EFA02 43 002	ST Adapter Dust Cap		7.1	
EFA02 43 003	FC Adapter Dust Cap	8		
All dimensions in millimeters				
Parts are available by special order only. 1,000 piece minimum.				

EFA02 52 001
Ferrule Dust Cap

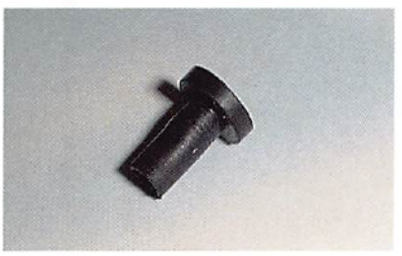

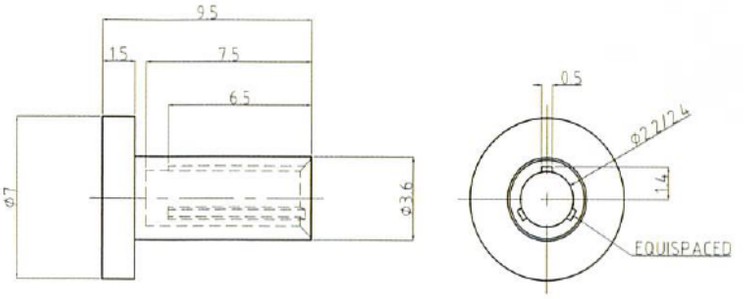

Features

- Provides environmental protection for Ø2.5mm ferrules

A Europlus/Richco Product
Material: TPE, RMS-185; Color: Black
Standard Pack: 500 per bag
EFA02 52 001
All dimensions in millimeters
Parts are available by special order only. 1,000 piece minimum.

J

539-4060 Sam
Get quote
Angic Global Solutions 1-888-872-0690
https://www.AngicGlobal.com Sales@AngicGlobal.com

EFA02 50 XXX

Ferrule Dust Cap and Tie



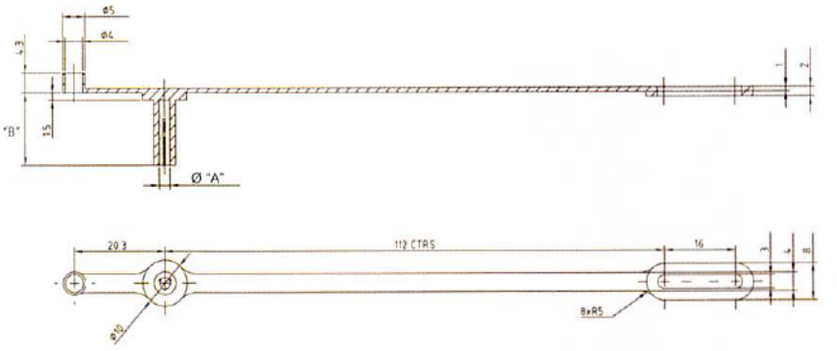

Features

- Provides environmental protection for Ø2.5mm and Ø1.25mm ferrules with molded-on retaining tie

A Europlus/Richco Product		
Material: TPE, RMS-185; Color: Black		
Standard Pack: 500 per bag		
Part Number	**"A"**	**"B"**
EFA02 50 001	2.5/2.45	15.5
EFA02 50 002	1.25/1.2	9.1
All dimensions in millimeters		

EFA02

One-Piece Dust Cap and Tie

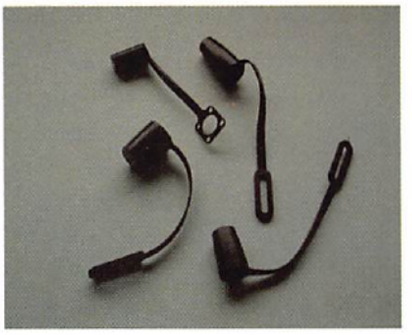

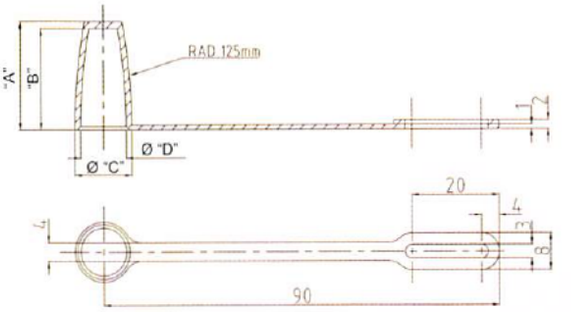

Features

- Provides environmental protection various connectors with molded-on retaining tie

A Europlus/Richco Product					
Material: PVC, RMS-186; Color: Black					
Standard Pack: 250 per bag					
Part No.	**Contents**	**"A"**	**"B"**	**"C"**	**"D"**
EFA02 08 ASS	One-Piece Biconic Dust Cap & Tie	23.5	22	13	10.4
EFA02 11 ASS	One-Piece FC/ST Dust Cap & Tie	18.5	17	12	8.7
EFA02 13 ASS	One-Piece ST Connector Dust Cap & Tie			15.3	12
Parts are available by special order only. 500 piece minimum.					
All dimensions in millimeters					

EFA02 35 001

One-Piece ST Adapter Dust Cap and Tie



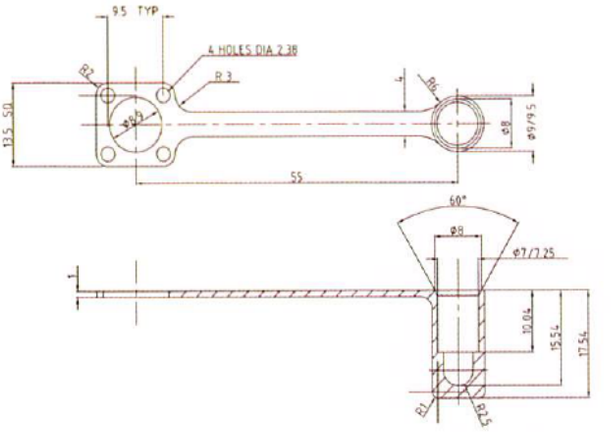

Features

- Provides environmental protection to an ST adapter with molded-on retaining tie

A Europlus/Richco Product
Material: TPE, RMS-185; Color: Black
Standard Pack: 250 per bag
EFA02 35 001
All dimensions in millimeters

-800-621-1892

ANGIC

Get quote

Angic Global Solutions 1-888-872-0690
https://www.AngicGlobal.com Sales@AngicGlobal.com

BPE-SC/BPE-ST
Blanking Plug for OF Connector

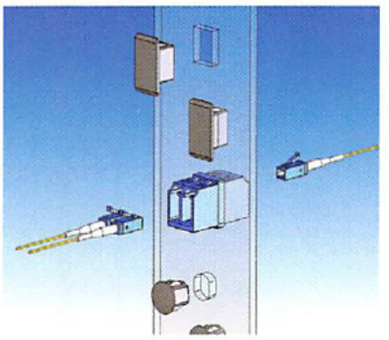

Features
- ST Series covers "Double-D," "D" or round hole cutouts for unused terminals in fiber optic boxes
- SC Series covers rectangular hole cutouts for unused terminals in fiber optic boxes

Material: Nylon 6/6, RMS-01; Color: Black Standard Pack: 1,000 per bag			
Part No.	"A"	"B"	"L"
BPE-SC-1-01	.85 (21.5)	.50 (12.8)	.51 (13)
BPE-SC-2-01	.63 (16)		
BPE-SC-3-01	1.37 (34.7)	1.02 (25.8)	1.02 (26)
BPE-ST-1-01	.47 (12)	.36 (9.2)	.370 ± .003 (9.4 ± 0.08)
Other colors are available by special order only.			

BPE-SC

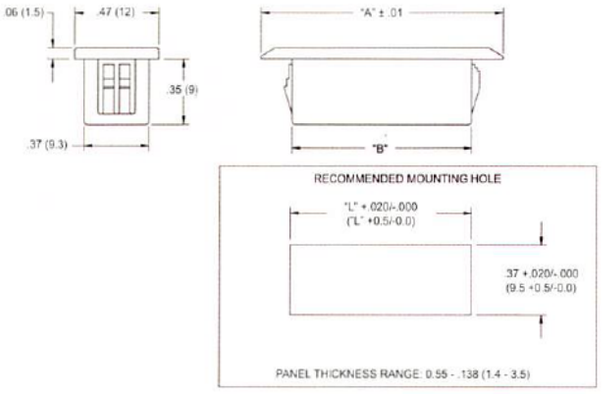

BPE-ST

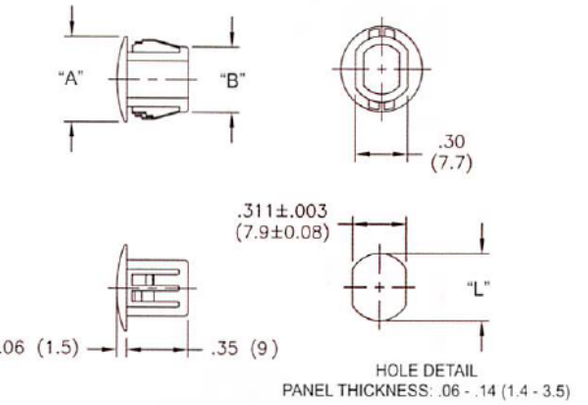

BPE-LC-D-01-BK
Blanking Plug for LC Duplex Adapter

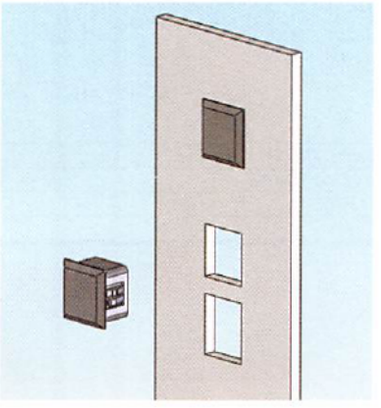

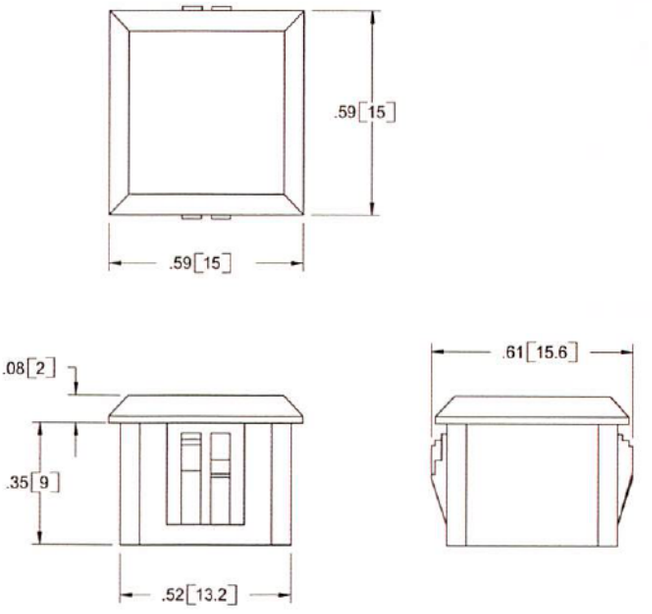

Features
- Suited for a square hole of .532 ± .002 (13.5 ± 0.05)
- Prevents dust from entering front panel
- Aesthetically pleasing, blanking off redundant connector ports
- Quick and easy installation - simply press fit the part into the designated hole
- Retractable panel locator wings enable the part to be used with panel thicknesses: .030 (0.75), .047 (1.2), .063 (1.6), .106 (2.7), and .148 (3.8)

Material: Nylon 6/6, RMS-01; Color: Black
Standard Pack: 1,000 per bag
BPE-LC-D-01-BK

539-4060 Sam
Get quote
Angic Global Solutions 1-888-872-0690
https://www.AngicGlobal.com Sales@AngicGlobal.com

OFCA-SC/ST-01

Optical Fiber Connector Cutout Adapter - SC/ST

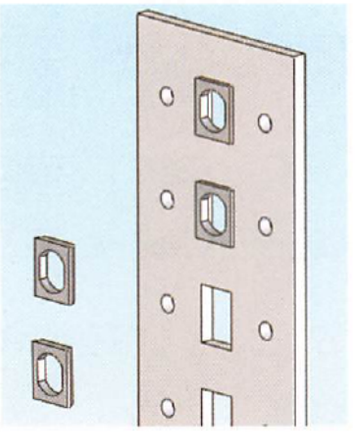

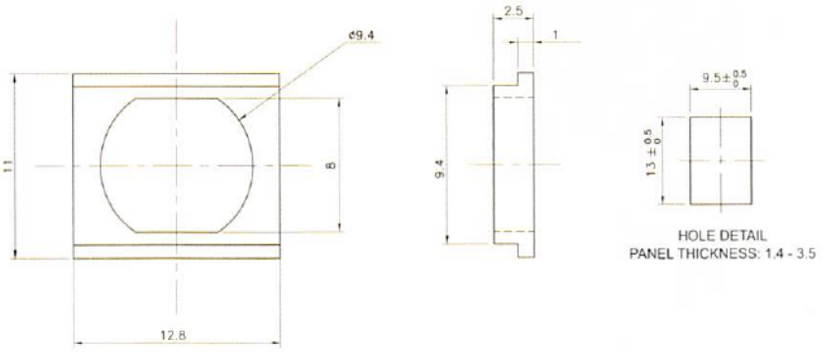

Features

- Converts a hole cut out for an SC connector into a hole cut out for an ST connector

Material: Nylon 6/6, RMS-01 Color: Natural
Standard Pack: 1,000 per bag
All dimensions in millimeters
Parts are available by special order only. 5,000 piece minimum.

CRTSC-1

SC Connector Removal Tool

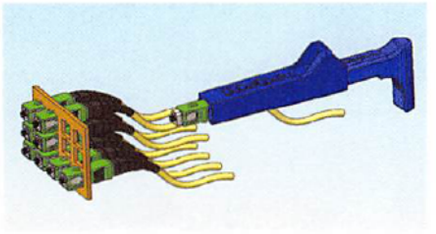

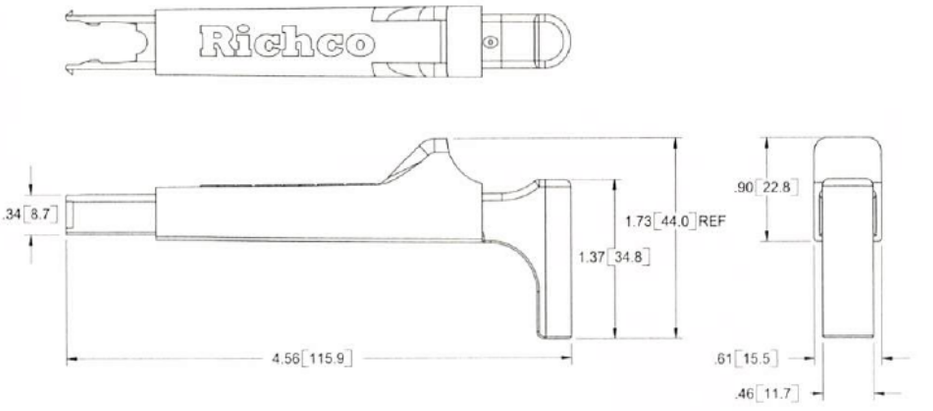

Features

- Ergonomic design
- Wear resistant Polycarbonate material
- Safe and easy removal of SC Simplex fiber connectors in densely populated patch panels
- Patent Pending

Material: Polycarbonate, RMS-217; Color: Blue
Standard Pack: 1 per bag
CRTSC-1

Notes

J

800-621-1892
Get quote
Angic Global Solutions 1-888-872-0690
https://www.AngicGlobal.com Sales@AngicGlobal.com

OFBLT

Optical Fiber Bend Limiting Tubing

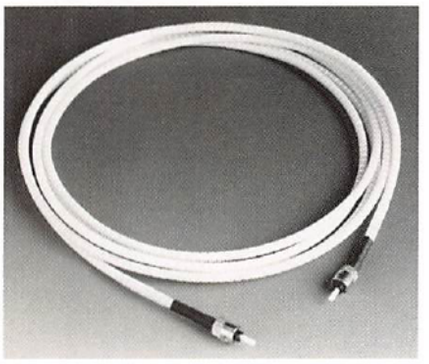

Fig. 1

Bend Limiting Modulus of 5mm Diameter OFBLT

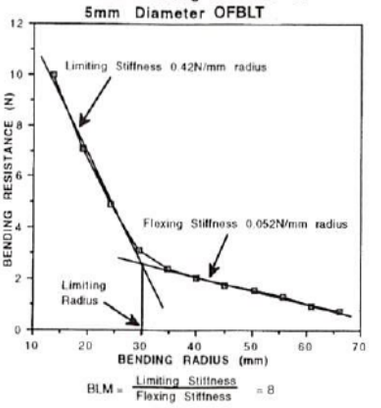

$$BLM = \frac{\text{Limiting Stiffness}}{\text{Flexing Stiffness}} = 8$$



Description:

Optical Fiber Bend Limiting Tubing offers the ultimate protection to fibers eliminating problems such as crushing, kinking, and micro bending, while supplying an entire, self-managing solution to managing the routing of fiber. OFBLT is available in many sizes and a range of tough, stable and fire retardant materials.

Features:

- Provides superior crush protection against micro fiber bends over conventional corrugated tubing, when under transverse compression
- Limits the bend in a fiber by controlling radius to a minimum of 30mm (Fig. 1)
- Range of popular sizes for convenience and space optimization
- Options of standard, slit (retro-fit), or pull-cord varieties (OFZT-3-14-BLK installation tool required for OFBLTS-3.1-05 or OFBLTS-4.2-632 tubing; OFZT-2-14-RED tool required for OFBLTS-2.6-05 tubing)
- Suitable for blown fiber applications over short distance and for curbside FTTH/FTTB applications
- Has a smooth inner bore for ease of use and elimination of micro-bending
- Range of accessories available providing compatibility with most applications
- Variants include flame retardant, low smoke, zero halogen and solvent resistant materials

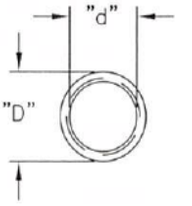

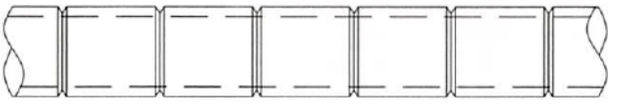

Typical Applications:

- Datacom and Telecom (internal & external) - FTTH/FTTB
- Automotive - M.O.S.T. ™ infotainment systems
- Defense
- Aviation
- Medical

Miniflex Technology manufactured by Richco - Patented			
OFBLT		**Standard Pack: 100 meters per reel**	
Mat'l: Polypropylene, RMS-86 Color: White	**Mat'l: PBT, RMS-140 Color: Black**	**"D" +.000/-.004 (+0.00/-0.10)**	**"d" +.008/-.004 (+0.20/-0.10)**
Standard Version			
OFBLT-3.1-05-PP	OFBLT-3.1-05-PBTV0	.199 (5.05)	.122 (3.1)
OFBLT-4.2-635-PP	OFBLT-4.2-635-PBTV0	.250 (6.35)	.165 (4.2)
Pull-Cord Version			
OFBLT-P-3.1-05-PP	OFBLT-P-3.1-05-PBTV0	.199 (5.05)	.122 (3.1)
Slit Version			
OFBLTS-3.1-05-PP	OFBLTS-3.1-05-PBTV0	.199 (5.05)	.122 (3.1)
OFBLTS-4.2-635-PP	OFBLTS-4.2-635-PBTV0	.250 (6.35)	.165 (4.2)
Other colors are available by special order only.			
OFBLT 4mm OD Slit Version available by special order only. Contact your local Richco office for further information.			

J

ANGIC Get quote
Angic Global Solutions 1-888-872-0690
https://www.AngicGlobal.com Sales@AngicGlobal.com

OFBLT-C1

Optical Fiber Bend Limiting Tubing Clip

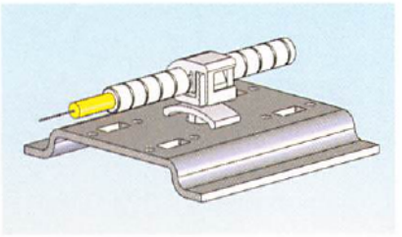

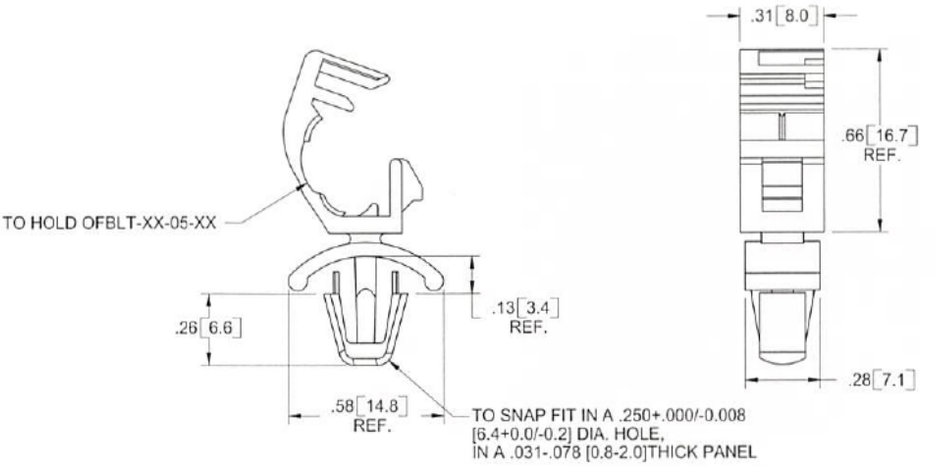

Features

- Holds .20 (5.0) outside diameter OFBLT in place, preventing fiber damage and movement
- Eliminates the need for standard mounting products to secure OFBLT
- Can be used with Slit-Version OFBLT

Color: Natural; Standard Pack: 1,000 per bag	
Part Number	**Material**
OFBLT-C1-5-01	Nylon 6/6, RMS-01
OFBLT-C1-5-19	Flame Ret. Nylon 6/6 UL94 V0, RMS-19

TPCE

Tube & Pipe Clip

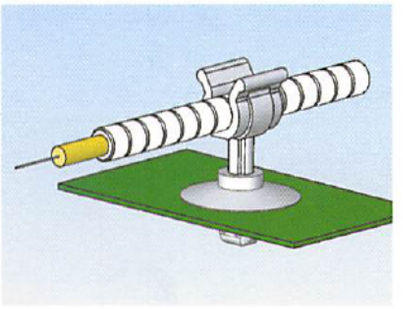

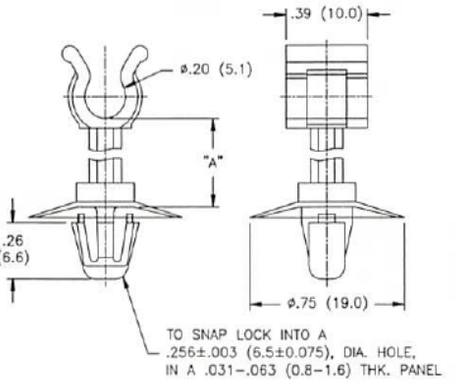

Features

- Holds .20 (5.0) outside diameter OFBLT for routing through any design
- Excellent for above board routing requirements

Color: Natural		
Material: Nylon 6/6, RMS-01 Part No.	**Material: UL94 V0 Nylon, RMS-19 Part No.**	**Standard Pack: 1,000 "A"**
TPCE-5-5.1-4M-01	TPCE-5-5.1-4M-19	.16 (4)
TPCE-5-5.1-6M-01	TPCE-5-5.1-6M-19	.24 (6)
TPCE-5-5.1-8M-01	TPCE-5-5.1-8M-19	.32 (8)
TPCE-5-5.1-10M-01	TPCE-5-5.1-10M-19	.39 (10)
Parts are available by special order only. 5,000 piece minimum.		

OFTGS/OFTGSP

Optical Fiber Tube Gripper Saddle

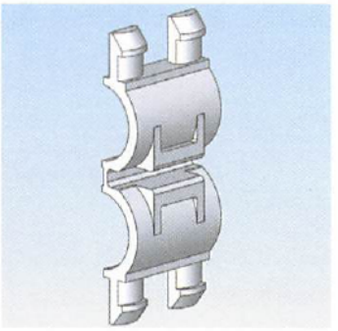

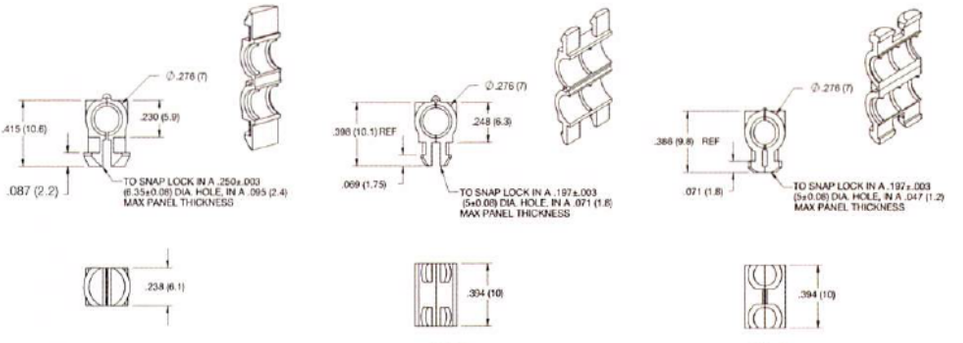

Description

The Optical Fiber Tube Gripper Saddle enables OFBLT to be anchored to a chassis or splice tray by the simple provision of 2 holes.

The saddle is placed over the OFBLT and closed down to engage on the external grooves of the tube, no threading is required. Secure attachment is completed by pressing the retaining feet through location holes.

Features

- Mid point or end termination of OFBLT
- Easy to locate and use
- For 5mm OFBLT
- Controlled routing of fiber circuits
- Maximum panel thickness: .068 (1.75)

Part No.	Material	Color	Figure	Standard Pack
OFTGSP-1-05-19	UL94 V0 Nylon 6/6, RMS-19	Natural	1	1000
OFTGSP-2-05-19	UL94 V0 Nylon 6/6, RMS-19	Natural	2	100
OFTGS-1-05-E901	TPE, RMS-98	Black	3	100

J

-800-621-1892
Get quote
Angic Global Solutions 1-888-872-0690
https://www.AngicGlobal.com Sales@AngicGlobal.com

OFSMB-4-05-GFBLK
Optical Fiber Slotted Multi Bracket

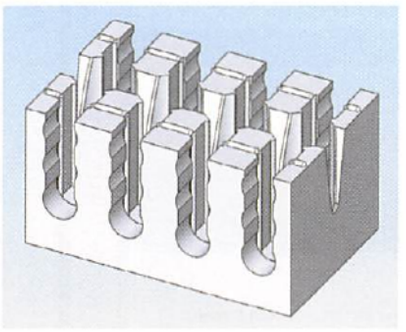

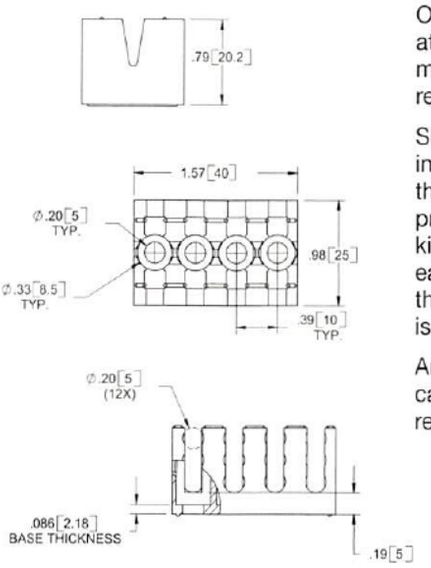

Miniflex Technology Manufactured by Richco - Patented
Material: Glass-Filled UL94 V0 Nylon, RMS-104, Color: Black
Standard Pack: 10 per bag

Description

Optical Fiber Slotted Multi-Brackets are for use at distribution points where orderly fiber management, protection and strain relief is required.

Slotted Multi-Brackets can be adapted to individual needs with the use of OFBLT. From the initial fiber entry point, superior fiber protection against bending, crushing and kinking is secured. Assembly of tubes is made easy by a simple "lay-through" design, no threaded is required. Mounting of either bracket is easy, using screws or push rivets as shown.

An additional security feature allows fitting of a cable tie around SSMB's which prevents removal of any retained tubes.

Features

- OFBLT retention: >70N
- Holds a maximum of 12 tubes

OFSSMB-1-05-GFBLK
Optical Fiber Single Slotted Multi Bracket

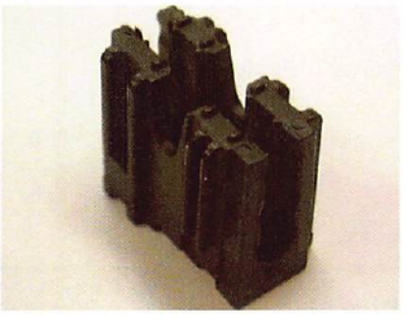

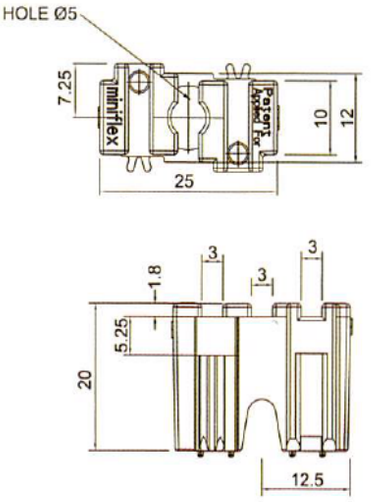

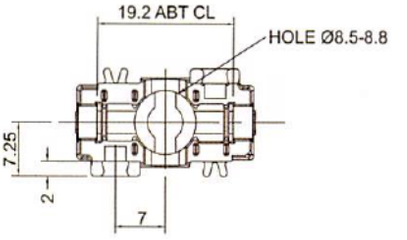

Features

- OFBLT retention: >70N
- Holds a maximum of 3 tubes
- Ability to latch to other OFSSMB's

Miniflex Technology Manufactured by Richco
Material: Glass-Filled UL94 V0 Nylon, RMS-104 Color: Black
Standard Pack: 10 per bag
All dimensions in millimeters

Notes

J

539-4060 Sam
Get quote
Angic Global Solutions 1-888-872-0690
https://www.AngicGlobal.com Sales@AngicGlobal.com

OFCBU
Optical Fiber Cable Breakout Unit

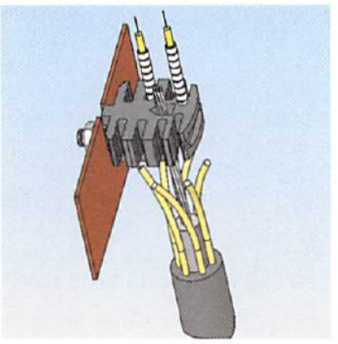

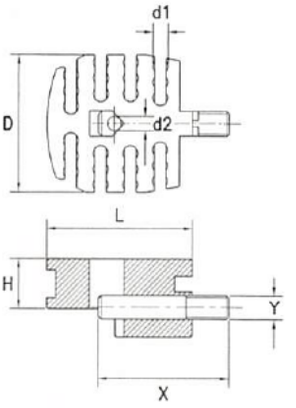

Miniflex technology manufactured by Richco - Patented							
Material: UL94 V0, RMS-19; Bolt: Stainless Steel • Color: Black							
Part No.	Standard Pack: 10/bag						
	"d1"	"d2"	"D"	"H"	"L"	"X"	"Y"
OFCBU-24-05-19BLK	.20 (5)	.19 (4.7)	1.73 (44)	.63 (16)	1.93 (49)	1.73 (44)	.31 (8)
Parts are available by special order only. 500 piece minimum.							

OFCBUGB
Optical Fiber Cable Gland Box

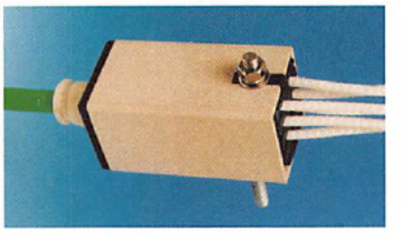

Gland Box Part No.	Cable Diameter
OFCBUGB-00	.16-.33 (4 - 8.5)
OFCBUGB-0	.30-.79 (7.5 - 20)
OFCBUGB-1	.37-.51 (9.5 - 13)
OFCBUGB-2	.51-.71 (13 - 18)
OFCBUGB-3	.69-.98 (17.5 - 25)
Standard Pack: 1 per bag	

Description

At distribution points, multi-fiber cables need to have the individual fibers or cable elements separated and protected by a management system. The cable strength member has to be terminated and anchored to prevent damage to the fibers from cable movement or pull out.

The Optical Fiber Cable Breakout Unit affords quick, easy and positive arrangements of the fibers or cable elements, which are sheathed in OFBLT to give permanent protection. Assembly of tubes is made easy by a simple "lay through" design, no threading is required.

The strength member retainer is simply inserted over the terminated cable as shown and clamps both the cable and the breakout unit to the jointing chassis.

A secure fiber management system that minimizes installation time and maximizes fiber integrity and security. Once installed, it can be left with total peace of mind.

For further protection, a cable gland and gland box are available. The cable gland will accommodate various cable diameters. Choose your part number based on your cable diameter.

Features

- Cable retention: >1.5kN
- OFBLT retention: >100N
- Maximum of 24 cable elements or 24 fiber bundles

OFM
Optical Fiber Manifold

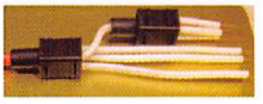

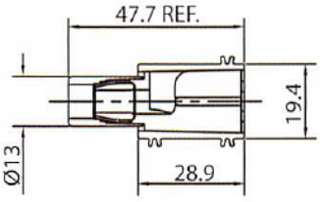

Miniflex technology manufactured by Richco - Patented		
Material: UL94 V0 Nylon, RMS-19; Color: Black		
Part No.	Standard Pack: 10/bag	
	Incoming Cable Size Diameter	Adapter Color
OFM-C-1-05-19BLK	.098 - .138 (2.5 - 3.5)	Black
OFM-C-2-05-19BLK	.118 - .157 (3 - 4)	Blue
OFM-C-3-05-19BLK	.161 - .197 (4.1 - 5)	Brown
OFM-C-4-05-19BLK	.201 - .236 (5.1 - 6)	Green
OFM-C-5-05-19BLK	.240 - .276 (6.1 - 7)	Red
OFM-C-6-05-19BLK	.280 - .335 (7.1 - 8.5)	Black Rubber
OFM-C-7-05-19BLK	.335 - .425 (8.5 - 10.8)	Black Rubber
OFM-T-05-19BLK	.197 (5) OFBLT	Split Black
OFM-T-635-19BLK	.197 - .250 (5 - 6.35) OFBLT	Split Blue
Parts are available by special order only. 500 piece minimum.		

OFM-04-PG-16BLK
Optical Fiber Cable Gland

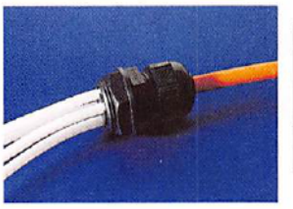

Miniflex Technology Manufactured by Richco - Patented
Material: Break-Out: Flame Retardant Nylon 6/6, Color: Black Gland Body & Nuts: Nylon, Color: Black
Standard Pack: 10 per bag
Available by special order; 500 piece minimum.

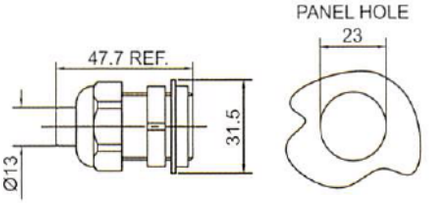

Description

The 1 into 4 Optical Fiber Manifold enables small multiple fiber cables with aramid and similar strength reinforcement or central GRP strength member to be mechanically and securely terminated. OFBLT at the output ports gives full radius control and crush protection while still allowing an easy to route fiber "lay-through" design. OFBLT can also be used at the input port. The manifold is stackable, and retains tubes greater than 100N. Crimp rings are available for terminating GRP strength members, order OFM-CR. A development kit is also available that contains all adapters, OFM-4-05-19BLK.

J

800-621-1892
ANGIC
Get quote
Angic Global Solutions 1-888-872-0690
https://www.AngicGlobal.com Sales@AngicGlobal.com

OFSRG

Optical Fiber Strain Relief Gland

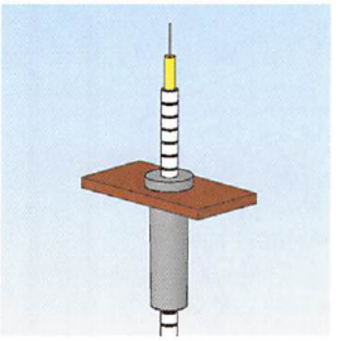

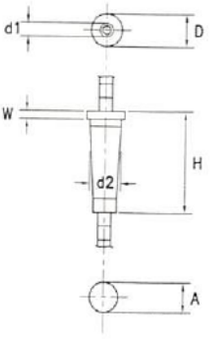

Description

The Optical Fiber Strain Relief Gland enables ruggedized patch cords, or fiber bundles, protected in OFBLT to be anchored to a chassis, or distribution trunking system, by the simple provision of a single hole.

The OFBLT is passed through the gland and is secured by the integral Tube Gripper Clip. This ensures a pull out resistance of over 100N while still ensuring a 30mm radius bend control and crush protection.

Features

- OFBLT retention: >100N
- Mid point or end termination of OFBLT
- Provides secure fixing

Miniflex technology manufactured by Richco - Patented						
Material: PVC • Color: Black						
Part No.	Standard Pack: 10/bag					
	Ø "D"	Ø "d1"	Ø "d2"	Ø "A"	"H"	"W"
OFSRG-05-BLK	.59 (15)	.20 (5)	.47 (12)	.43 (11)	1.46 (37)	0.12 (3)
Parts are available by special order only. 500 piece minimum.						

OFD

Optical Fiber Duplexer

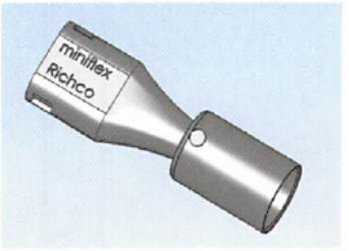

Description

The Optical Fiber Duplexer enables cables with aramid strands to be broken out and mechanically terminated. It provides an easy-to-use assembly with no crimping, while still retaining a minimum of a 100N pull. Used with the 5mm diameter OFBLT at the output port, it gives full blend control and crush protection for ongoing fibers. The Duplexer gives an easy-to-use lay through facility with internal fiber radius control.

The Duplexer gives a range of input adapters to cover OFBLT, fiber bundles, cable and patch cords from 2.5mm to 7.00mm in diameter. For cables up to 10.8mm in diameter, a rubber sleeve is provided. See cable size chart below.

Features

- Tube retention: >100N
- For a Development Kit containing all adapters, order: OFD-C-05-19BLK

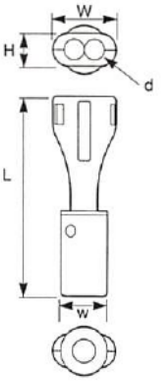

Part Number	"L"	"W"	"w"	"H"	"d"
OFD series	1.95 (49.6)	0.64 (16.2)	0.52 (13.2)	0.31 (8)	0.20 (5)

Miniflex technology manufactured by Richco - Patented		
Material: UL94 V0 Nylon, RMS-19; Color: Black		
Part Number	Standard Pack: 10/bag	
	Incoming Cable Size Diameter	Adapter Color
OFD-C-1-05-19BLK	.098 - .138 (2.5 - 3.5)	Black
OFD-C-2-05-19BLK	.118 - .157 (3 - 4)	Blue
OFD-C-3-05-19BLK	.161 - .197 (4.1 - 5)	Brown
OFD-C-4-05-19BLK	.200 - .236 (5.1 - 6)	Green
OFD-C-5-05-19BLK	.240 - .276 (6.1 - 7)	Red
OFD-C-6-05-19BLK	.280 - .335 (7.1 - 8.5)	Black Rubber
OFD-C-9-05-19BLK	.335 - .425 (8.5 - 10.8)	Black Rubber
OFD-C-7-05-19BLK	.197 (5) OFBLT	Split Black
OFD-C-8-635-19BLK	.250 (6.35) OFBLT	Split Blue
Parts are available by special order only. 500 piece minimum.		

Notes

539-4060 Sam
Get quote
Angic Global Solutions 1-888-872-0690
https://www.AngicGlobal.com Sales@AngicGlobal.com

EFA04
Fiber Reels



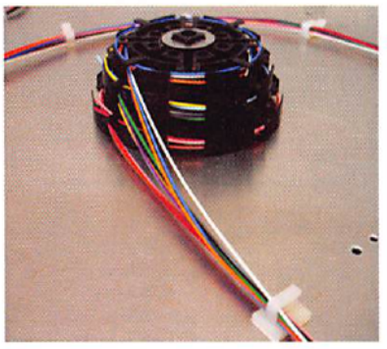

Features

- Variable radius storage options
- Can be screw mounted (screw not supplied), or optional adhesive pad mounted (adhesive pads supplied when specified)
- Board mountable using Stand-off EFA04 27 ASS (page 209)
- Stackable using Stacking Pillar EFA04 53 ASS (page 209)
- Fig. 1 can be broken apart into 4-90° bending control devices
- Can accommodate bare to ruggedized fiber

Fig. 1

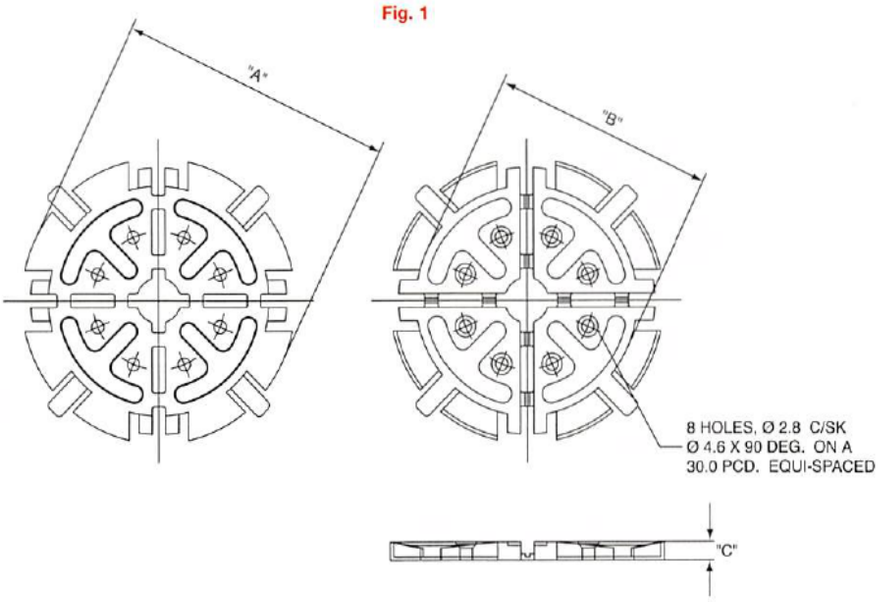

Fig. 2

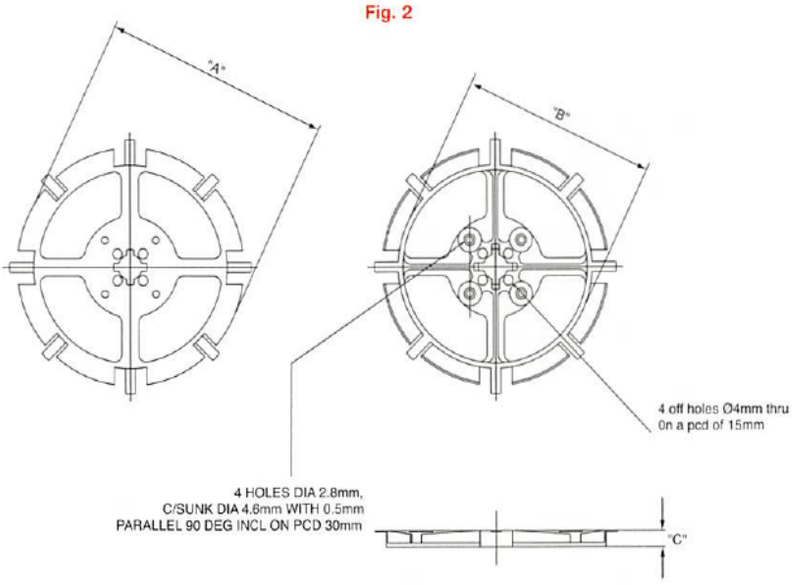

A Europlus/Richco Product
Material: UL94 V0 Nylon 6, RMS-178
Standard Pack: 100 per bag

Part No.	Contents	"A"	"B"	"C" Height	Figure	Max. Fiber Storage
EFA04 04 001	25mm radius fiber reel	62	50	4	1	2.5m of 900 micron fiber
EFA04 04 ASS	EFA04 04 001 with 4 self-adhesive pads					
EFA04 21 001	25mm radius fiber reel			6.35		4.5m of 900 micron fiber
EFA04 21 ASS	EFA04 21 001 with 4 self-adhesive pads					
EFA04 10 001	30mm radius fiber reel	72	60	3.9		3m of 900 micron fiber
EFA04 10 ASS	EFA04 10 001 with 4 self-adhesive pads					
EFA04 14 001	30mm radius fiber reel			12.4		9m of 900 micron fiber
EFA04 14 ASS	EFA04 14 001 with 4 self-adhesive pads					
EFA04 76 001	35mm radius fiber reel	82	70	8		15m of 900 micron fiber
EFA04 76 ASS	EFA04 76 001 with 4 self-adhesive pads					
EFA04 23 001	40mm radius fiber reel	92.4	80	6.35	2	7m of 900 micron fiber
EFA04 23 ASS	EFA04 23 001 with 4 adhesive pads					

Parts are available by special order only. 500 piece minimum.
All dimensions in millimeters

-800-621-1892
Get quote
Angic Global Solutions 1-888-872-0690
https://www.AngicGlobal.com Sales@AngicGlobal.com

OFS90-30R

Optical Fiber Segment
90°, 30mm Radius

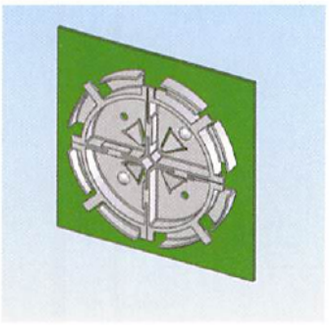

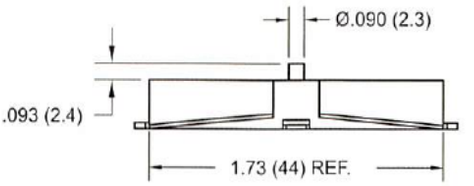

Features

- Assemble two pieces for bend control around a 180° turn
- Assemble four pieces for excess fiber spooling at 30mm radius
- In a four-piece assembled mode, stores approximately 60m of 900 micron fiber
- Rivet mounted with SR-3XXX series Richco rivet, please see page 52

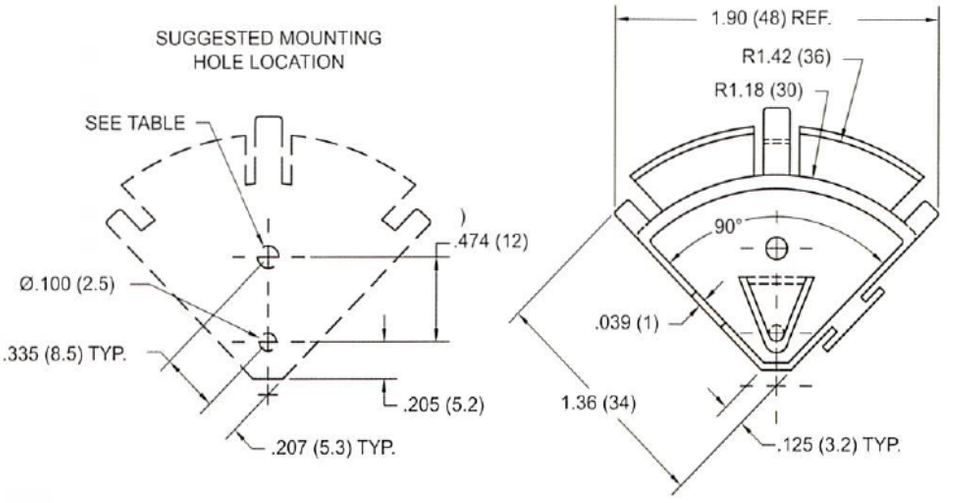

Material: UL94 V0 Nylon, RMS-19 Color: Natural
Standard Pack: 100 per bag

MOUNTING RIVETS FOR THE OFS90-30R		
Rivet No.	Panel Thickness Range	Mounting Hole Dia.
SRV0-3035	Up to .039 (1)	.122-.126 (3.1-3.2)
SRV0-3045	.039-.079 (1-2)	
SRV0-3055	.079-.118 (2-3)	
SRV0-3065	.118-.158 (3-4)	
SRV0-3075	.158-.197 (4-5)	
SRV0-3080	.177-.217 (4.5-5.5)	
SRV0-3090	.217-.256 (5.5-6.5)	
SRV0-3100	.256-.295 (6.5-7.5)	

EFA04 53 ASS

Fiber Reel Mounting Pillar

Features

- Pillar is rivet mounted from the bottom of the board with SRHR-3555 rivet (see page 53)
- Reels are retained using the included spring retaining clip

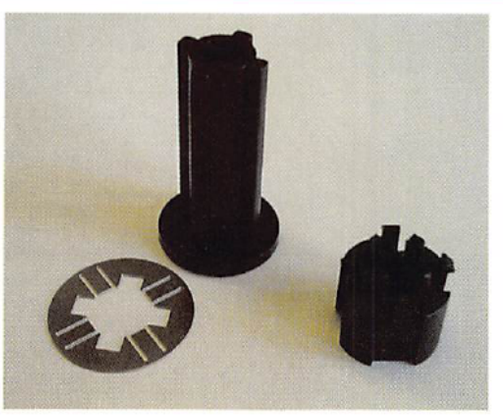

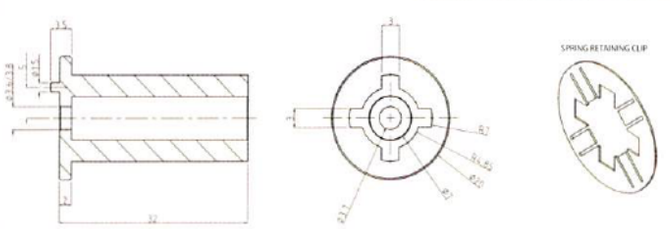

A Europlus/Richco Product
Material: UL94 V0 Nylon 6, RMS-178; Color: Black
Standard Pack: 100 per bag
EFA04 53 ASS
Parts are available by special order only. 500 piece minimum.
All dimensions in millimeters

EFA04 27 ASS

Fiber Reel Standoff

Features

- Standoff is rivet mounted from the bottom of the board with SRHR-3555 rivet (see page 53)
- Reel snaps onto the top of the standoff, holding it in place

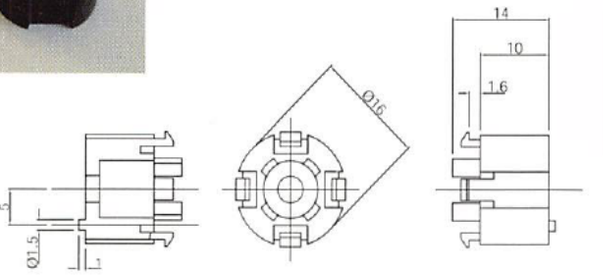

A Europlus/Richco Product
Material: UL94 V0 Nylon 6, RMS-178; Color: Black
Standard Pack: 50 per bag
EFA04 27 ASS
Parts are available by special order only. 500 piece minimum.
All dimensions in millimeters

J

539-4060 Sam
Angic Global Solutions 1-888-872-0690
https://www.AngicGlobal.com Sales@AngicGlobal.com
Get quote

EFA04 34
Corner Guide

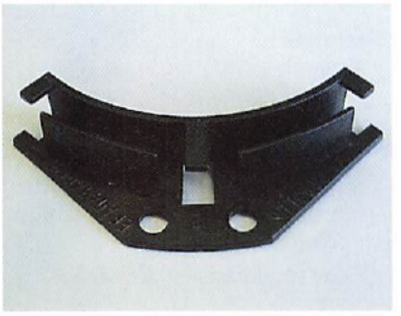

Features
- Maintains bending radius through a 90° turn
- Variable radius control options
- Rivet, screw or adhesive mounted

Fig. 2

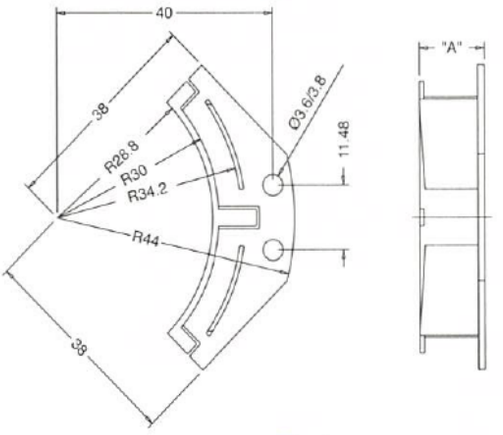

Fig. 4

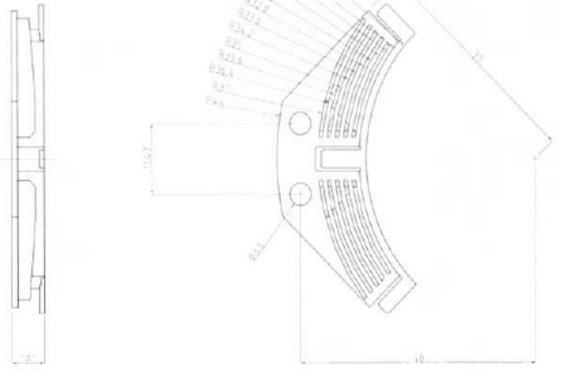

Fig. 1

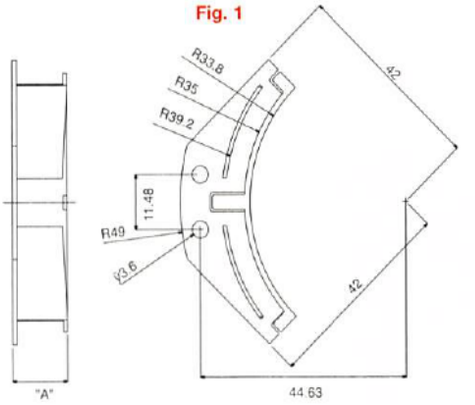

Fig. 3

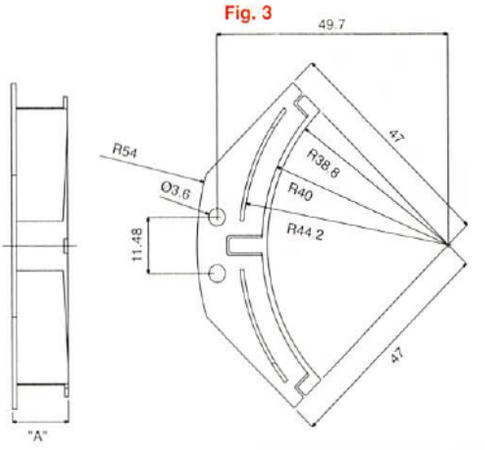

A Europlus/Richco Product			
Material: UL94 V0 Nylon 6, RMS-178; Color: Black			
Standard Pack: 100 per bag			
Part No.	**Contents**	**"A" Height**	**Figure**
EFA04 34 001	30mm Radius Corner Guide	5	2
EFA04 34 P01	Guide with Self-Adhesive Pad		
EFA04 34 R01	Guide with SRHR-3555 Rivets		
EFA04 34 PR1	Guide with Pad and Rivets		
EFA04 34 010	30mm Radius Corner Guide	8	
EFA04 34 P10	Guide with Self-Adhesive Pad		
EFA04 34 R10	Guide with SRHR-3555 Rivets		
EFA04 34 PR0	Guide with Pad and Rivets		
EFA04 34 004	30mm Radius Corner Guide	12	
EFA04 34 P04	Guide with Self-Adhesive Pad		
EFA04 34 R04	Guide with SRHR-3555 Rivets		
EFA04 34 PR4	Guide with Pad and Rivets		
EFA04 34 002	35mm Radius Corner Guide	4.8	1
EFA04 34 P02	Guide with Self-Adhesive Pad		
EFA04 34 R02	Guide with SRHR-3555 Rivets		
EFA04 34 PR2	Guide with Pad and Rivets		
EFA04 34 005	35mm Radius Corner Guide	12	
EFA04 34 P05	Guide with Self-Adhesive Pad		
EFA04 34 R05	Guide with SRHR-3555 Rivets		
EFA04 34 PR5	Guide with Pad and Rivets		
EFA04 34 003	40mm Radius Corner Guide	4.8	3
EFA04 34 P03	Guide with Self-Adhesive Pad		
EFA04 34 R03	Guide with SRHR-3555 Rivets		
EFA04 34 PR3	Guide with Pad and Rivets		
EFA04 34 006	40mm Radius Corner Guide	12	
EFA04 34 P06	Guide with Self-Adhesive Pad		
EFA04 34 R06	Guide with SRHR-3555 Rivets		
EFA04 34 PR6	Guide with Pad and Rivets		
EFA04 34 007	Ribbon Fiber Guide	5.5	4
EFA04 34 P07	Guide with Self-Adhesive Pad		
EFA04 34 R07	Guide with SRHR-3555 Rivets		
EFA04 34 PR7	Guide with Pad and Rivets		
Parts are available by special order only. 500 piece minimum.			
All dimensions in millimeters			

J

-800-621-1892
Get quote
Angic Global Solutions 1-888-872-0690
https://www.AngicGlobal.com Sales@AngicGlobal.com

EFA04 60
Straight Guide

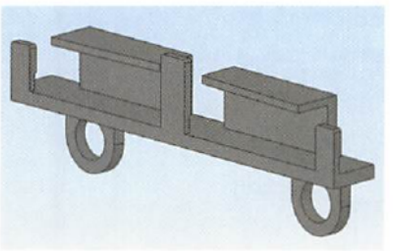

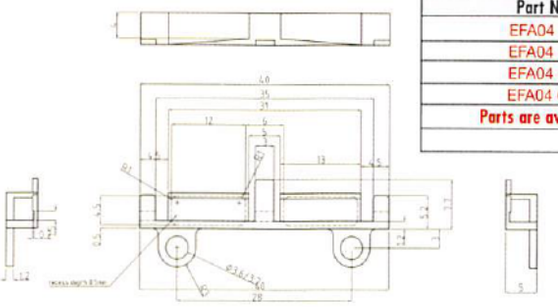

A Europlus/Richco Product	
Material: UL94 V0 Nylon 6, RMS-178; Color: Black	
Standard Pack: 100 per bag	
Part Number	**Contents**
EFA04 60 001	Guide
EFA04 60 P01	Guide with Self-Adhesive Pad
EFA04 60 R01	Guide with SRHR-3555 Rivets
EFA04 60 PR1	Guide with Pad and Rivets
Parts are available by special order only. 500 piece minimum.	
All dimensions in millimeters	

OFFG/OFFGSP
Optical Flexible Fiber Guide System

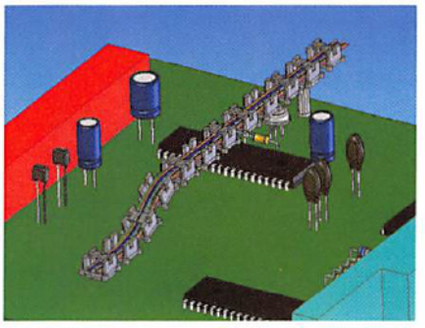

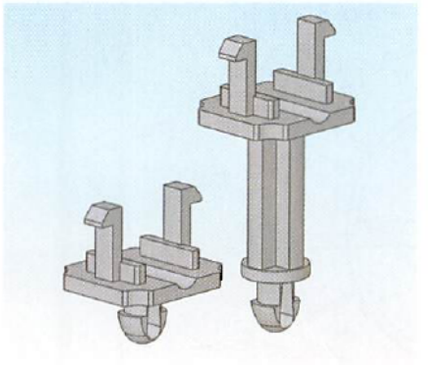

Features

- Fully modular system giving complete fiber management and protection at PCB level applications
- For use with 250 and 900 micron fiber
- Fiber can enter and exit at any point, without risk of fiber snagging or kinking
- Angled and straight lugs located along the top of the guide, preventing fiber from springing out
- 'Snake' the guide through and over components, where space is limited
- Patent Pending

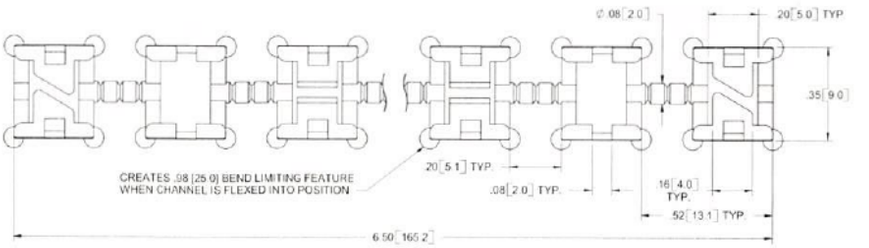

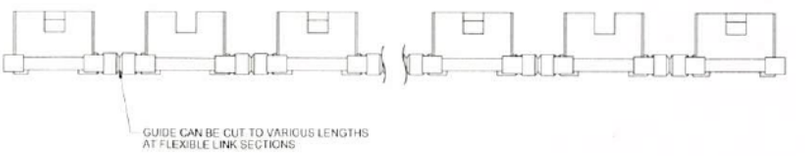

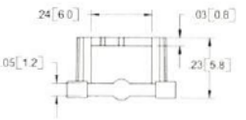

Material: UL94 V0 Nylon 6/6, RMS-19; Color: Black
Standard Pack: 100 per bag
OFFG-165M-19-BK

Material: UL94 V0 Nylon 6/6, RMS-19; Color: Black		
Standard Pack: 100 per bag		
Part No.	**OFFG Mounting Type**	**Standoff Height "A"**
OFFGSP-F-19-BK	Flat Support Post	-
OFFGSP-R-05-19-BK	Standoff Support Post	.20 (5)
OFFGSP-R-10-19-BK		.39 (10)
OFFGSP-R-16-19-BK		.63 (16)
Other standoff heights and panel thicknesses are available by special order only.		

OFFGSP-F

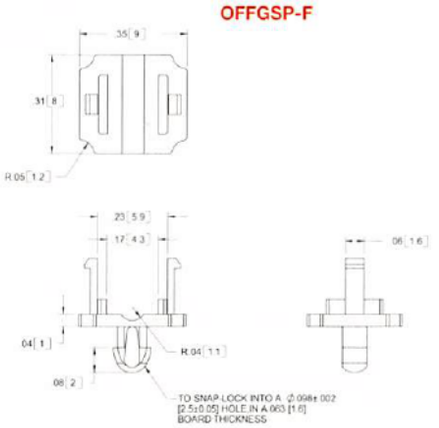

OFFGSP-R

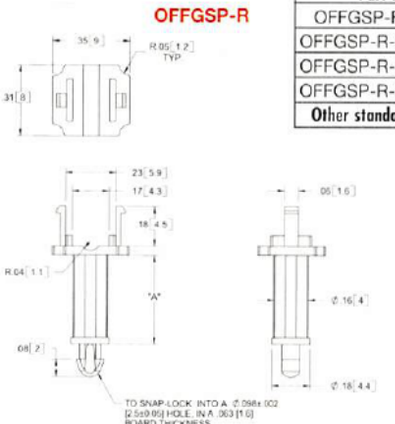

J

539-4060 Sam
Get quote
Angic Global Solutions 1-888-872-0690
https://www.AngicGlobal.com Sales@AngicGlobal.com

EFA04 91 ASS
Fiber Winding & Storage Reel

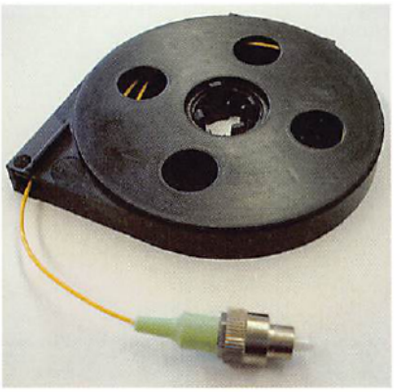

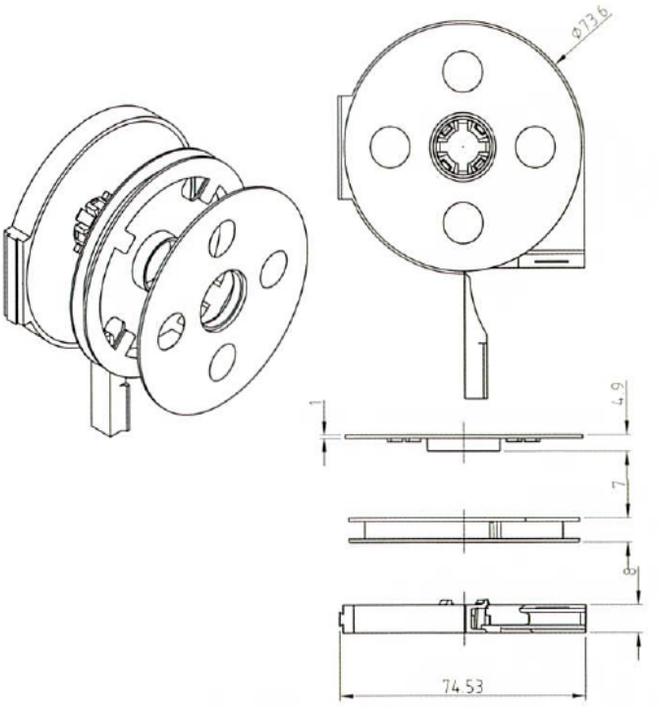

Features

- Fiber maintained on a 30 mm radius
- Stores up to 5.0m of 900 micron fiber
- Also accepts ribbon fiber
- Easy pull-out of fiber
- Gentle winding motion by hand
- Board mountable using Stand-off EFA04 27 ASS (page 209)
- Stackable using Stacking Pillar EFA04 53 ASS (page 209)

A Europlus/Richco Product
Material: UL94 V0 Nylon 6, RMS-178; Color: Black
Standard Pack: 50 per bag
EFA04 91 ASS
Parts are available by special order only. 100 piece minimum.
All dimensions in millimeters

EFA04 67 ASS
Fiber Winding Reel

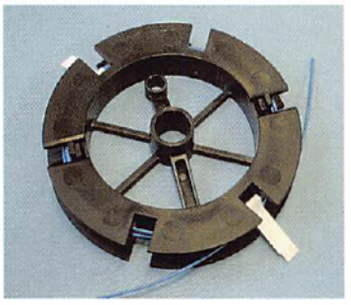

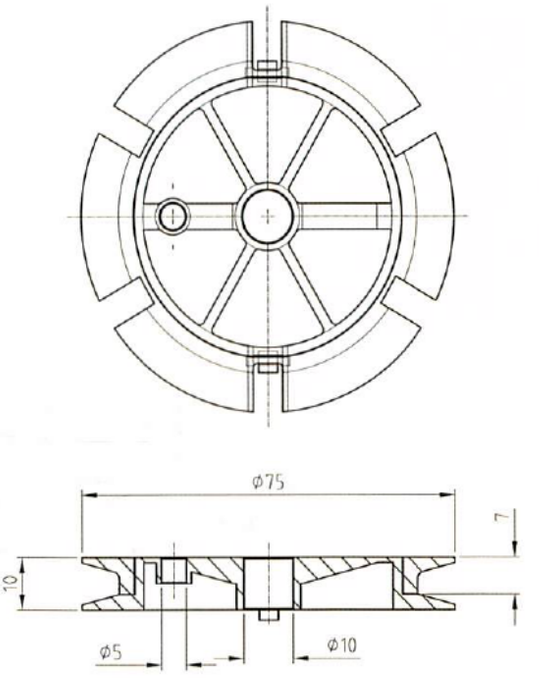

Features

- Wound fiber is taped to maintain bend radius and provide identification (tape not supplied)
- Two-part reel is then disassembled for easy fiber removal
- Stores up to 8m of 900 micron fiber at a 30mm radius
- Reusable

A Europlus/Richco Product
Material: UL94 V0 Nylon 6, RMS-178; Color: Black
Standard Pack: 50 per bag
EFA04 67 ASS
Parts are available by special order only. 100 piece minimum.
All dimensions in millimeters

J

800-621-1892
Angic Global Solutions 1-888-872-0690
https://www.AngicGlobal.com Sales@AngicGlobal.com
Get quote

EFA04 78 002
Multi Position Array Tray

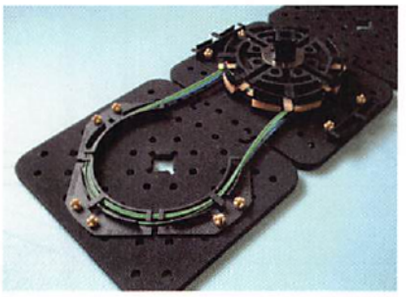

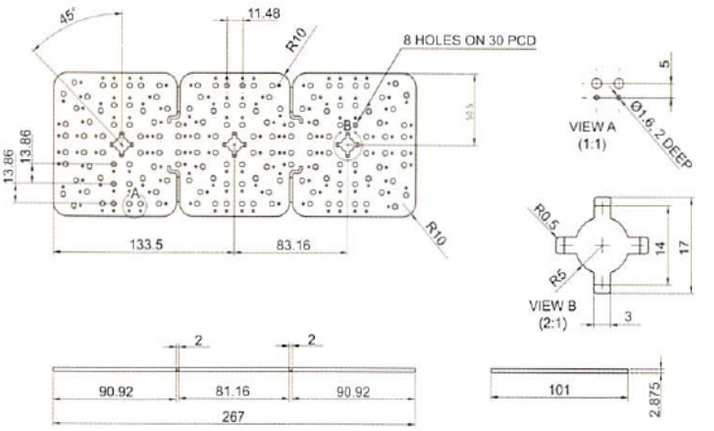

Features

- Design layout using various Corner Guides (page 210) and Fiber Reels (page 208)
- Stackable using Stacking Pillar EFA04 53 ASS (page 209)
- Board mountable using Stand-off EFA04 27 ASS (page 209)
- Can be broken apart into 3 segments

A Europlus/Richco Product
Material: UL94 V0 Nylon 6, RMS-178; Color: Black
Standard Pack: 50 per bag
EFA04 78 002
Parts are available by special order only. 100 piece minimum.
All dimensions in millimeters

RX
Richflex Flexible Channel

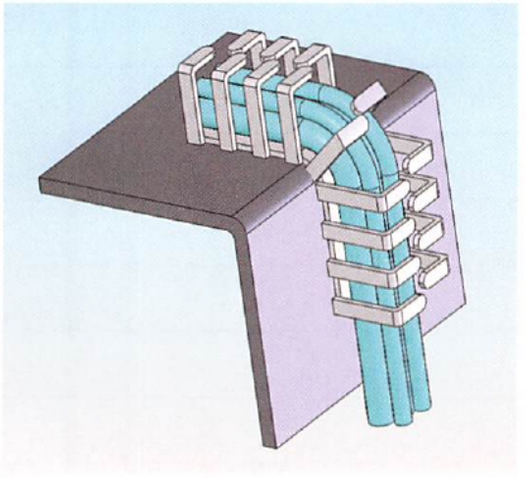

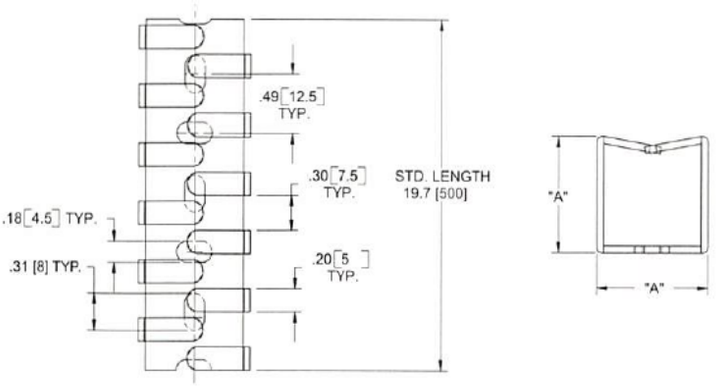

Features

- Mounted with adhesive or with a screw
- Flexible base is useful in routing wires from the back of control panels and sidewalls to components mounted on control panel doors
- Flexible ribs allow the wires or fibers to be easily "pushed" and "pulled" into and out of the channel

Material: Polypropylene, RMS-177 • Adhesive Back, .04 (1) thick, RMS-93 Color: Grey • Std. Length: 19.7 (500)				
Part No.	**Ext. Dim. "A" x "A" in (mm)**	**Int. Section in² (mm²)**	**Standard Packing (pcs)**	**Mounting Method**
RX1313-0	.492 x .492 (12.5 x 12.5)	.171 (110)	112	Screw
RX1313-4				Adhesive
RX1616-0	.630 x .630 (16 x 16)	.287 (185)	84	Screw
RX1616-4				Adhesive
RX2020-0	.787 x .787 (20 x 20)	.496 (320)	112	Screw
RX2020-4				Adhesive
RX2525-0	.984 x .984 (25 x 25)	.775 (500)	70	Screw
RX2525-4				Adhesive
RX3030-0	1.181 x 1.181 (30 x 30)	1.116 (720)	50	Screw
RX3030-4				Adhesive
RX4040-0	1.575 x 1.575 (40 x 40)	2.046 (1320)	50	Screw
RX4040-4				Adhesive
RX5050-0	1.969 x 1.969 (50 x 50)	3.162 (2040)	32	Screw
RX5050-4				Adhesive

J

539-4060 Sam
Get quote
Angic Global Solutions 1-888-872-0690
https://www.AngicGlobal.com Sales@AngicGlobal.com

OBFC
Optical Blown Fiber Connector

NEW

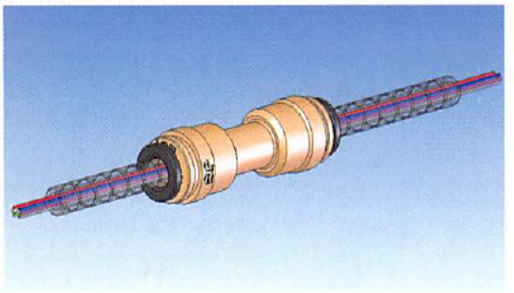

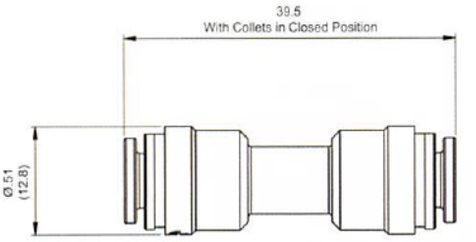

Features

- Connection system for joining standard element tubing with Richco OFBLT
- Clear body enables installer to see fiber through connector body

OBFC-5-1			
Component	**Material**	**Color**	**Quantity**
5mm O-Rings	Nitrile, RMS-201	Black	4
5mm Collets	Acetal, RMS-202	Black	2
	Stainless Steel Grip Ring, RMS-203	Steel	
5mm Body	Polycarbonate, RMS-204	Clear	1
Tube Insertion Depth: 16.8mm with Collets in release position			
For Coupling (5mm dia.):	OFBLT-XX-05-PP		
	OFBLT-P-XX-05-PP		
	OFBLTS-XX-05-PP		
All dimensions in millimeters			

Notes

J

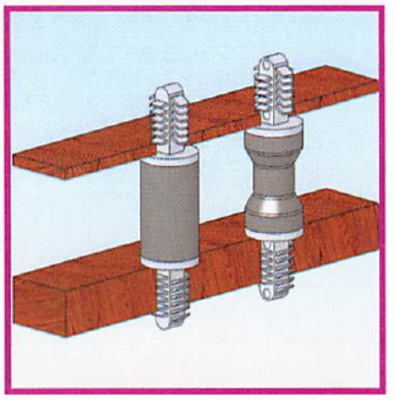

- Up-to-the minute product updates can be seen on our corporate web page at www.richco-inc.com
- Raw Material Specifications (RMS) can be found at the end of the catalog – pages 227 - 234
- Want to try a sample? Please call 1-800-621-1892

-800-621-1892
Get quote
Angic Global Solutions 1-888-872-0690
https://www.AngicGlobal.com Sales@AngicGlobal.com

General Features

Richco has an extensive range of grommets, bushings and strain relief products. The wide range of grommets that Richco offers are designed to protect cabling against sharp edges, especially where vibration is an issue. The grommets can be used on straight edges, holes or irregular shapes. Richco's grommet range is available in a variety of materials including plastic, rubber and metal. They can be easily installed without the need of adhesives, glue or installation tools. Richco has specific grommets to enable the user to install in irregular shapes or on straight edges.

Richco bushings are designed to easily snap into pre-drilled holes. They convert sharp-edged holes into smooth, insulated holes. Richco offers a split design which allows retrofitting on pre-assembled cable harnesses.

The elimination of cable strain and wear is solved via the use of Richco's strain relief bushings which are easily installed with an installation tool.

Typical Applications

- Brown Goods/Consumer Electronics - Audio and video equipment
- White Goods - Washing Machines, ovens
- Telecommunications - Distribution racks
- General Electronics

Introduction

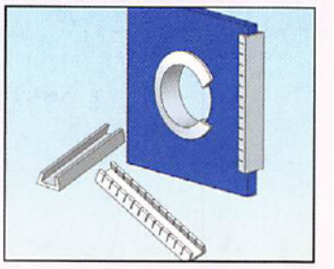

Continuous Grommet Strips

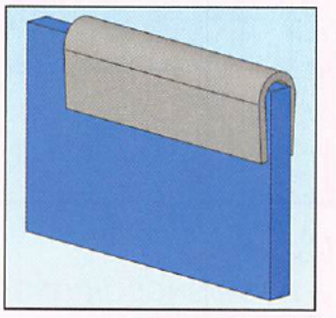

Duro-Strip Channels

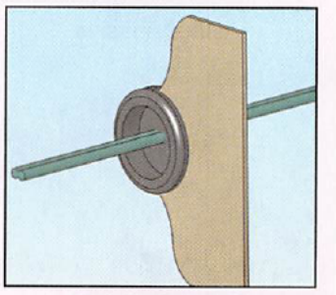

Blank Diaphragm Grommets

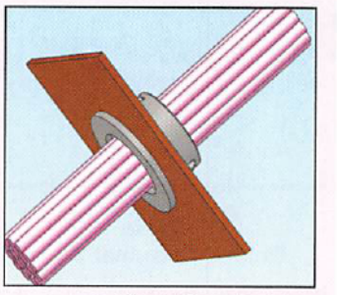

Closed Snap Bushings

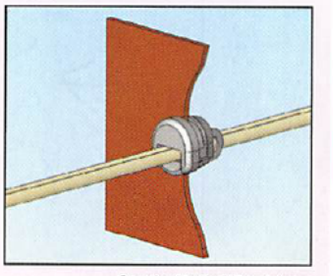

Strain Relief Bushings

K

ANGIC
Get quote
3-539-4060 Sa
Angic Global Solutions 1-888-872-0690
https://www.AngicGlobal.com Sales@AngicGlobal.com

NGS/PGS/SNGS/SPGS
Continuous Grommet Strip

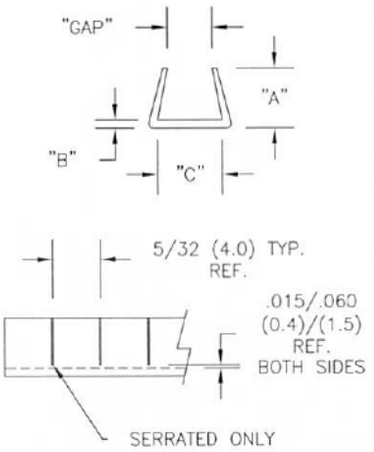

Features
- Protects and insulates wires and cables from chafing against sharp edges
- Solid style is for straight edges, serrated style is for round, square and rectangular shapes

Standard Pack: 100 Foot Roll (30.48M)

Solid Lengths	Serrated Lengths	Material	Color	Panel Thickness	"A" Ref.	"B" Ref.	"C" Ref.	"Gap" Ref.
NGS-1	SNGS-1	Nylon, RMS-21	Natural	Up To .036 (0.9)	.125 (3.2)	.031 (0.8)	.031 (0.8)	.018 (0.5)
-	SNGS-1B		Black					
NGS-2	SNGS-2		Natural	.037 - .071 (0.9 - 1.8)	.172 (4.4)		.109 (2.8)	.037 (0.9)
-	SNGS-2B		Black					
NGS-2.5	SNGS-2.5		Natural or Add B for Black	.072 - .105 (1.8 - 2.7)				.060 (1.5)
NGS-3	SNGS-3		Natural	.106 - .164 (2.7 - 4.2)	.188 (4.8)	.047 (1.2)	.156 (4)	.106 (2.7)
-	SNGS-3B		Black					
-	SNGS-4		Natural	.165 - .187 (4.2 - 4.7)			.188 (4.8)	.165 (4.2)
-	SNGS-4B		Black					
NGS-5	SNGS-5		Natural	.188 - .250 (4.8 - 6.4)			.250 (6.4)	.187 (4.7)
-	SNGS-5B		Black					
PGS-1	SPGS-1	Polyethylene, RMS-06	Natural	Up To .036 (0.9)	.125 (3.2)	.031 (0.8)	.031 (0.8)	.018 (0.5)
PGS-1B	-		Black					
PGS-2	SPGS-2		Natural or Add B for Black	.037 - .071 (0.9 - 1.8)	.172 (4.4)		.109 (2.8)	.037 (0.9)
PGS-2.5	SPGS-2.5		Natural or Add B for Black	.072 - .105 (1.8 - 2.7)				.060 (1.5)
PGS-3	SPGS-3		Natural or Add B for Black	.106 - .164 (2.7 - 4.2)	.188 (4.8)	.047 (1.2)	.156 (4)	.106 (2.7)
PGS-4	SPGS-4		Natural	.165 - .187 (4.2 - 4.7)			.188 (4.8)	.165 (4.2)
PGS-5	SPGS-5		Natural	.188 - .250 (4.8 - 6.4)			.250 (6.4)	.187 (4.7)

Custom lengths available by special order.

NGSG/SNGSG/PGSG/SPGSG
Continuous Grommet Strip with Adhesive

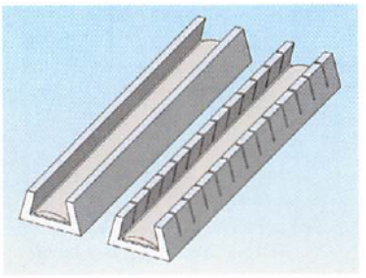

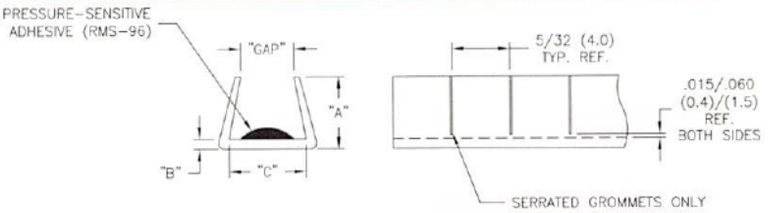

Features
- Adhesive provides self-retaining grip

Standard Pack: 100 Foot Roll (30.48M)

Solid Lengths	Serrated Lengths	Material	Color	Panel Thickness	"A" Ref.	"B" Ref.	"C" Ref.	"Gap" Ref.
NGSG-2	SNGSG-2	Nylon, RMS-21	Natural	.037 - .071 (0.9 - 1.8)	.172 (4.4)	.031 (0.8)	.109 (2.8)	.037 (0.9)
-	SNGSG-2B		Black					
NGSG-2.5	SNGSG-2.5		Natural	.072 - .105 (1.8 - 2.7)				.060 (1.5)
-	SNGSG-2.5B		Black					
NGSG-3	SNGSG-3		Natural	.106 - .164 (2.7 - 4.2)	.188 (4.8)	.047 (1.2)	.156 (4)	.106 (2.7)
-	SNGSG-3B		Black					
PGSG-2	SPGSG-2	Polyethylene, RMS-06	Natural or Add B for Black	.037 - .071 (0.9 - 1.8)	.172 (4.4)	.031 (0.8)	.109 (2.8)	.037 (0.9)
PGSG-6*	SPGSG-6*		Natural		.160 (4.1)	.025 (0.6)	.060 (1.5)	
PGSG-6B*	-		Black					
PGSG-2.5	SPGSG-2.5		Natural or Add B for Black	.072 - .105 (1.8 - 2.7)	.172 (4.4)	.031 (0.8)	.109 (2.8)	.060 (1.5)
-	SPGSG-7*		Natural		.188 (4.8)	.035 (0.9)	.100 (2.5)	
PGSG-3	SPGSG-3		Natural or Add B for Black	.106 - .164 (2.7 - 4.2)		.047 (1.2)	.156 (4)	.106 (2.7)
-	SPGSG-8*		Natural			.035 (0.9)		

*Parts are extra flexible

Custom lengths available by special order.

MGS
Molded Grommet Strip

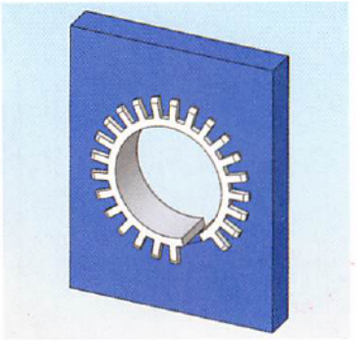

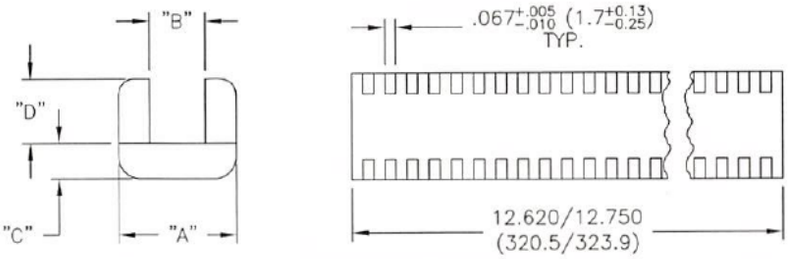

Features
- Complies with Mil Spec 21266
- Minimum hole dia. = 1 (25.4)

Material: Nylon 6/6, RMS-01 • Color: Natural

Part No.	Standard Pack: 100 per bag				
	Panel Thickness (Ref.)	"A" +.015/-.005 (+0.38/-0.13)	"B" +.015/-.005 (+0.38/-0.13)	"C" +.015/-.005 (+0.38/-0.13)	"D" +.020/-.005 (+0.38/-0.13)
MGS-1-01	.015 - .052 (0.4 - 1.3)	.150 (3.8)	.056 (1.4)	.055 (1.4)	.10 (2.5)
MGS-2-01	.052 - .085 (1.3 - 2.2)	.175 (4.4)	.090 (2.3)		
MGS-3-01	.085 - .128 (2.2 - 3.3)	.220 (5.6)	.131 (3.3)		
MGS-4-01	.128 - .192 (3.3 - 4.9)	.325 (8.3)	.195 (5)	.070 (1.8)	.16 (4.1)
MGS-5-01	.192 - .255 (4.9 - 6.5)	.385 (9.8)	.260 (6.6)		.17 (4.3)
MGS-6-01	.255 - .318 (6.5 - 8.1)	.445 (11.3)	.320 (8.1)	.075 (1.9)	.18 (4.6)

-800-621-1892
Get quote
Angic Global Solutions 1-888-872-0690
https://www.AngicGlobal.com Sales@AngicGlobal.com

MCCG/MCCGF
Metal Continuous Cushioned Grommet

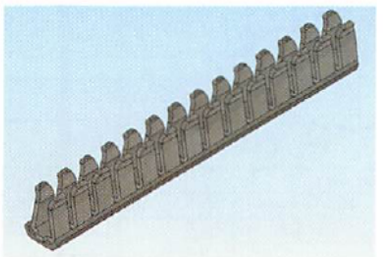

Features

- Polymer cushion provides a soft surface to protect wires and cable
- Dielectric Strength: 1500 volts @ 60 Hz
- Operating Temperature Range: -40°F to 185°F (-40°C to 85°C)
- UL94 V0 flammability rating
- High corrosion resistance
- MCCGF Series is more flexible than the MCCG series because of its design.

Fig. 1

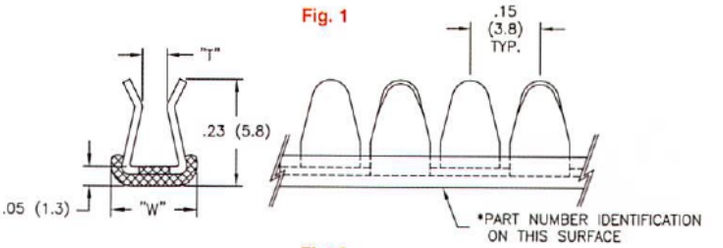

Fig. 2

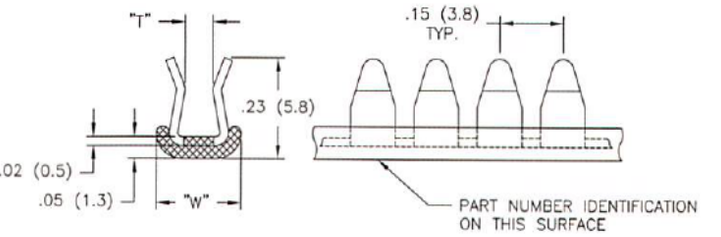

MCCG/MCCGF	Material: 304 Stainless Steel, RMS-283; Coating: Nylon 11, RMS-192, Color: Black; Cushion: TPE, 60 Shore D, RMS-300, Color: Black		Standard Pack: 100 Ft. (30.5M) Reel
	Fig.	"T" Application Thickness	"W"
MCCG-1N	1	.029 - .045 (0.7 - 1.1)	.19 (4.8)
MCCG-2N		.044 - .056 (1.1 - 1.4)	
MCCG-3N		.055 - .069 (1.4 - 1.7)	
MCCG-4N		.069 - .090 (1.7 - 2.3)	.23 (5.8)
MCCG-6N		.113 - .130 (2.9 - 3.3)	
MCCGF-1N	2	.029 - .045 (0.7 - 1.1)	.19 (4.8)
MCCGF-2N		.044 - .056 (1.1 - 1.4)	
MCCGF-3N		.055 - .069 (1.4 - 1.7)	
Hand held cutting tool needed, order part number MCGS-1			

MCG/MCGF
Metal Continuous Grommet

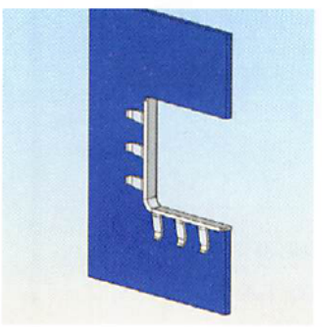

Features

- Dielectric Strength: 1000 volts @ 60 Hz
- Operating Temperature Range: -40°F to 285°F (-40°C to 140°C)
- UL94 V0 flammability rating
- High corrosion resistance
- Fits any two axis contour
- MCGF Series is more flexible than the MCG series because of its design.

Fig. 1

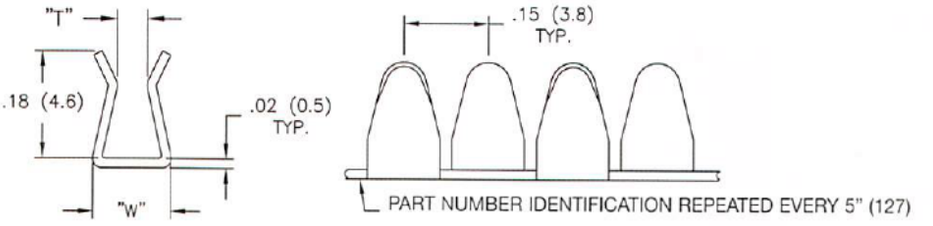

Fig. 2

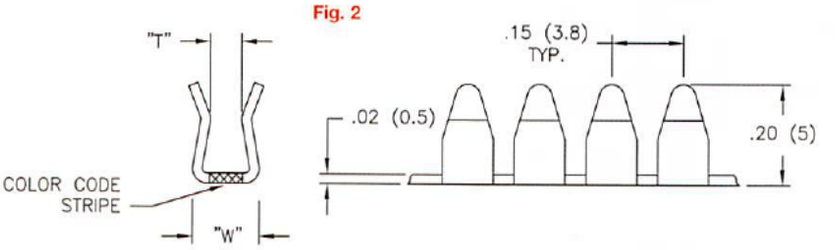

MCG/MCGF	Material: 304 Stainless Steel, RMS-283; Coating: Nylon 11, RMS-192,Color: Black		Standard Pack: 100 Ft. (30.5M) Reel	
	Fig.	"T" Application Thickness	"W"	Color Code Strip, RMS-346
MCG-1N	1	.029 - .045 (0.7 - 1.1)	.14 (3.6)	Not Applicable
MCG-2N		.044 - .056 (1.1 - 1.4)		
MCG-3N		.055 - .069 (1.4 - 1.7)		
MCG-4N		.069 - .090 (1.7 - 2.3)	.18 (4.6)	
MCG-6N		.113 - .130 (2.9 - 3.3)		
MCGF-1N	2	.029 - .045 (0.7 - 1.1)	.13 (3.3)	White
MCGF-2N		.044 - .056 (1.1 - 1.4)		Pink
MCGF-3N		.055 - .069 (1.4 - 1.7)		Yellow
Hand held cutting tool needed, order part number MCGS-1				

K

539-4060 Sam
Get quote
Angic Global Solutions 1-888-872-0690
https://www.AngicGlobal.com Sales@AngicGlobal.com

DSC
Duro-Strip Channel

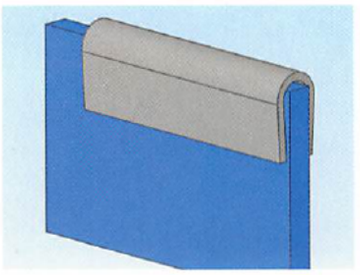

Features

- Used as wear strips, non-abrasive edging, noise reducing conveyor strips, framing, binding or to protect from sharp edges
- Built in lubricant for reduced friction and longer part life
- Resists ordinary solvents, mild acids and alkalis or fungus growth

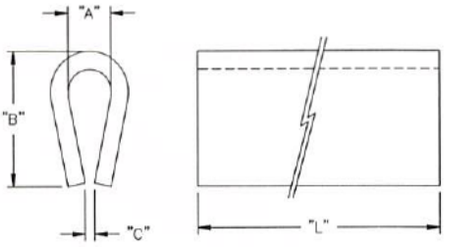

Material: MDS Filled Nylon, RMS-21 • Color: Grey					
Part No	"A" ± .015 (0.4)	"B" ± .031 (±0.8)	"C" Ref.	Wall Thickness	Std. Pkg.
DSC-.5-48	.062 (1.6)	.300 (7.6)	.031 (0.8)	.031 (0.8)	100' (30.48M): 4' (1.22M) lengths x 25 pieces
DSC-1-48	.125 (3.2)	.375 (9.5)	.020 (0.5)	.047 (1.2)	
DSC-2-48	.188 (4.8)	.500 (12.7)	.031 (0.8)		
DSC-3-48	.250 (6.4)	.625 (15.9)	.045 (1.1)	.063 (1.6)	
Custom lengths available by special order					

CH
Channel

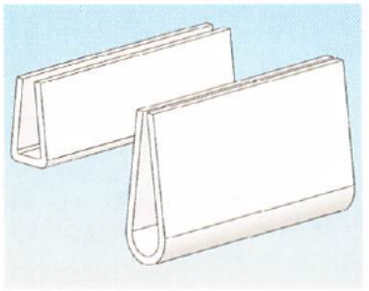

Features

- Offers protection from sharp edges

Figure 1

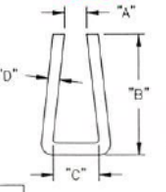

Figure 2

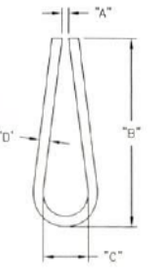

Material: Polystyrene, RMS-16 • Color: White					
Part No.	Standard Pack: 100' (30.48M): 4' (1.22M) lengths x 25				
	"A" Ref.	"B"	"C" Min.	"D" Typ.	Fig. #
CH200X250-48	.200 (5.1)	3/8 (9.5)	1/4 (6.4)	1/32 (0.8)	1
CH15X50-48	.015 (0.4)	7/16 (11.1)	.05 (1.3)		
CH20X141-48	.020 (0.5)	9/16 (14.3)	9/64 (3.6)	1/32 (0.8)	2
Other colors available by special order.					
Custom lengths available by special order.					

SLH-16-1
Single Living Hinge

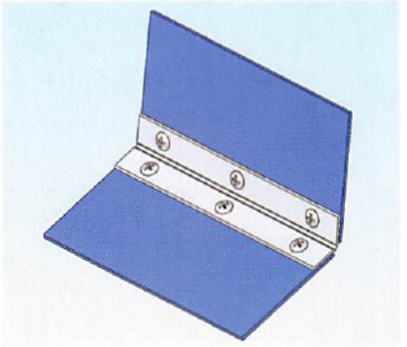

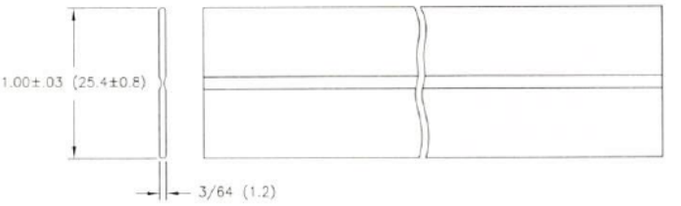

Features

- Applied with staples, screws or rivets
- Non-corrosive and acid resistant

Material: Polypropylene, RMS-54 Color: Natural
Standard Pack: 100 ft. (30.5M) Rolls
Custom lengths available by special order.

RG
Rubber Edge Grommet

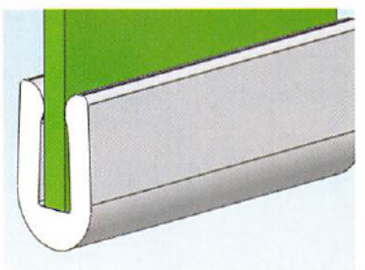

NEW

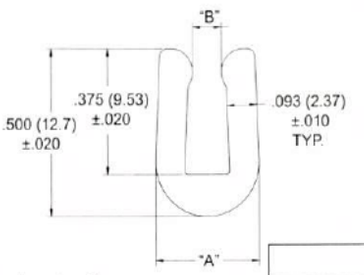

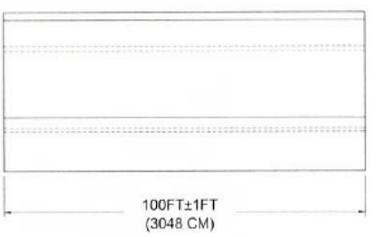

Features

- Soft rubber prevents chafing
- Flexible material can be used on edges or on internal cutouts

Material: TPE, RMS-214 Color: Black			
Standard Pack: 3048 CM Roll			
Part No.	Panel Size	"A" Ref.	"B" Max.
RG-1	1.6	6.74	0.76
RG-2	2.36	7.44	1.52
RG-3	3.18	8.23	2.29

K

800-621-1892
ANGIC
Get quote
Angic Global Solutions 1-888-872-0690
https://www.AngicGlobal.com Sales@AngicGlobal.com

KCG
Quck Cable Gland

NEW

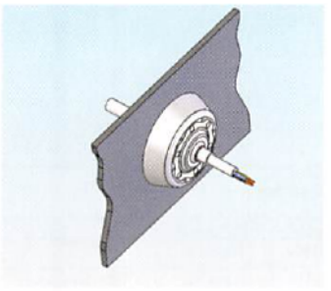

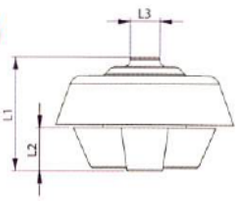



Features
- Provides slight strain relief
- Water & dust proof to IP67
- Quicker installation than traditional cable glands

Material: TPE, RMS-286 and Nylon 6/6, RMS-287 Color: Gray Standard Pack: 1,000 per bag										
Part No.	Hole Diameter	Panel Thickness	Panel Thickness for IP67	Anchorage Type A For Cable Ø	L1	L2	L3	SW*	For Cable Ø	Tension Relief Ø
KCG-1	.807 (20.5)	.059 - .196 (1.5 - 5)	.078 - .196 (2 - 5)	.275 - .433 (7 - 11)	.787 (20)	.224 (5.7)	.157 (4)	1.153 - 1.358 (29.3 - 34.5)	.157 - .433 (4 - 11)	N/A
KCG-2	1.003 (25.5)			.275 - .511 (7 - 13)			.196 (5)	1.350 - 1.574 (34.3 - 40)	.157 - .551 (4 - 14)	.236 - .511 (6 - 13)
*Varies depending on the thickness of material installed in.										

VG
Vibration Grommet

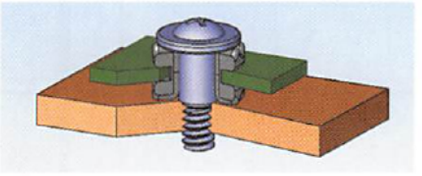

NEW

Features
- Unique rib design maximizes absorption
- Controls noise and vibration
- VGS Series, Vibration Grommet Screws are also available

Fig. 1



Fig. 2



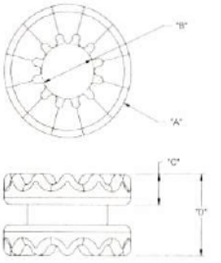

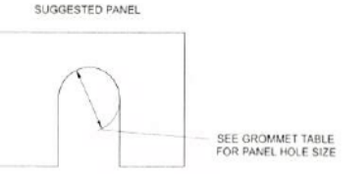

Material: Neoprene Rubber, RMS-190 • Color: Black Standard Pack: 1,000 per bag							
Part No.	Dim. "A" ±.010	Dim. "B" ±.010	Panel Thickness	Panel Hole Size	Dim. "C"	Dim. "D"	Fig.
VG-1	.380 (9.7)	.158 (4)	.057 ± .006 (1.45 ± 0.15)	.250 ± .005 (6.35 ± 0.13)	.087 (2.2)	.231 (5.9)	1
VG-2	.565 (14.4)	.188 (4.8)	.063 ± .006 (1.6 ± 0.15)	.375 ± .005 (9.53 ± 0.13)	.131 (3.3)	.324 (8.2)	1
VG-3	.380 (9.7)	.158 (4)	.031 ± .003 (0.79 ± 0.08)	.250 ± .005 (6.35 ± 0.13)	.100 (2.5)	.231 (5.9)	1
VG-4	.565 (14.4)	.188 (4.8)	.043 ± .004 (1.09 ± 0.1)	.375 ± .005 (9.53 ± 0.13)	.141 (3.6)	.324 (8.2)	1
VG-5	.374 (9.5)	.142 (3.6)	.055 ± .006 (1.4 ± 0.15)	.217 ± .005 (5.5 ± 0.13)	.083 (2.1)	.217 (5.5)	2

HG
Hole Grommet

NEW



Features
- Operating temperature up to 194°F (90°C)
- Available in UL94 V0 material by special order

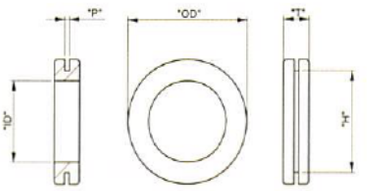

Part No.	Standard Pack: 1,000 per bag "H" Panel Hole Size	"P" Panel Thickness	"ID" Inside Diameter	"OD" Outside Diameter	"T" Grommet Thickness	Material
HG-2	.190 (4.8)	.063 (1.6)	.126 (3.2)	.315 (8)	.252 (6.4)	TPE, RMS-262
HG-2.5	.252 (6.4)	.063 (1.6)	.148 (4)	.374 (9.5)	.248 (6.3)	
HG-3	.305 (7.7)	.032 (0.8)	.188 (4.8)	.430 (10.9)	.188 (4.8)	
HG-3.5	.315 (8)	.063 (1.6)	.217 (5.5)	.394 (10)	.217 (5.5)	
HG-4	.374 (9.5)	.095 (2.4)	.252 (6.4)	.559 (14.2)	.276 (7)	
HG-5	.430 (10.9)	.063 (1.6)	.313 (8)	.562 (14.3)	.188 (4.8)	
HG-17	.433 (11)	.079 (2)	.315 (8)	.630 (16)	.276 (7)	
HG-6	.492 (12.5)	.063 (1.6)	.374 (9.5)	.669 (17)	.276 (7)	
HG-8	.660 (16.8)	.063 (1.6)	.495 (12.6)	.846 (21.5)	.250 (6.4)	
HG-9	.675 (17.1)	.063 (1.6)	.558 (14.2)	.875 (22.2)	.188 (4.8)	
HG-11	.735 (18.7)	.063 (1.6)	.672 (17.1)	.933 (23.7)	.188 (4.8)	
HG-10	.742 (18.8)	.063 (1.6)	.610 (15.5)	.875 (22.2)	.219 (5.6)	
HG-18	.748 (19)	.095 (2.4)	.500 (12.7)	.945 (24)	.280 (7.1)	
HG-12	.976 (24.8)	.063 (1.6)	.734 (18.6)	1.234 (31.3)	.313 (8)	
HG-14	.990 (25.1)	.063 (1.6)	.860 (21.8)	1.188 (30.2)	.313 (8)	
HG-16	1.240 (31.5)	.063 (1.6)	.970 (24.6)	1.500 (38.1)	.313 (8)	

K

539-4060 Sam
Get quote
Angic Global Solutions 1-888-872-0690
https://www.AngicGlobal.com Sales@AngicGlobal.com

QFG
Quick Fit Grommet

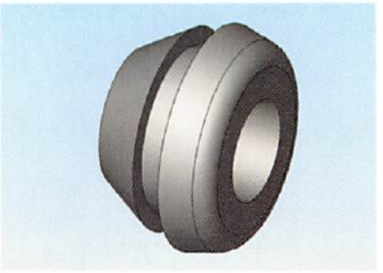

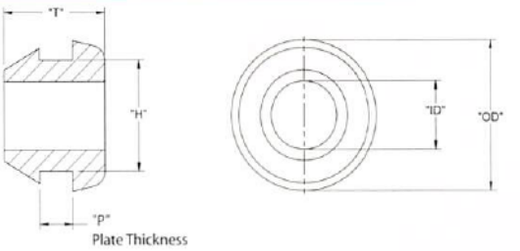

Features
- Snaps securely and quickly into position

Part No.	Standard Pack: 1,000 per bag					
	"T"	"P"	"H" Hole Size	"ID" Inside Diameter	"OD" Outside Diameter	Material
QFG-16200	.32 (8)	.06 (1.5)	.39 (9.9)	.24 (6.1)	.53 (13.5)	TPE, RMS-262
QFG-16201	.32 (8)	.06 (1.5)	.43 (10.9)	.28 (7.1)	.57 (14.5)	TPE, RMS-262
QFG-16203	.32 (8)	.06 (1.5)	.55 (14)	.39 (9.9)	.69 (17.5)	TPE, RMS-262
QFG-16204	.32 (8)	.06 (1.5)	.63 (16)	.47 (11.9)	.77 (19.6)	TPE, RMS-262
QFG-16205	.32 (8)	.06 (1.5)	.71 (18)	.55 (14)	.85 (21.6)	Vinyl, RMS-25
QFG-16207	.32 (8)	.06 (1.5)	.87 (22.1)	.71 (18)	1.00 (25.4)	TPE, RMS-262
QFG-16209	.32 (8)	.06 (1.5)	1.10 (27.9)	.94 (23.9)	1.24 (31.5)	Vinyl, RMS-25
QFG-16220	.37 (9.5)	.12 (3)	.39 (9.9)	.24 (6.1)	.53 (13.5)	TPE, RMS-262
QFG-16222	.37 (9.5)	.12 (3)	.47 (11.9)	.32 (8.1)	.61 (15.5)	TPE, RMS-262
QFG-16223	.37 (9.5)	.12 (3)	.55 (14)	.39 (9.9)	.69 (17.5)	Vinyl, RMS-25
QFG-16224	.37 (9.5)	.12 (3)	.63 (16)	.47 (11.9)	.77 (19.6)	TPE, RMS-262
QFG-16228	.37 (9.5)	.12 (3)	1.02 (25.9)	.87 (22.1)	1.16 (29.5)	TPE, RMS-262

DGB
Blank Diaphragm Grommet

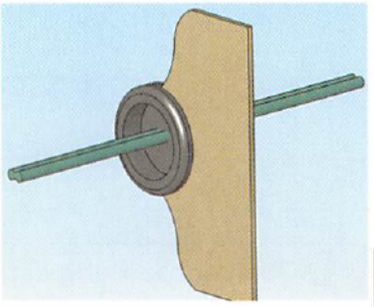

- Operating temperature up to 194°F (90°C)
- Available in UL94 V0 material by special order

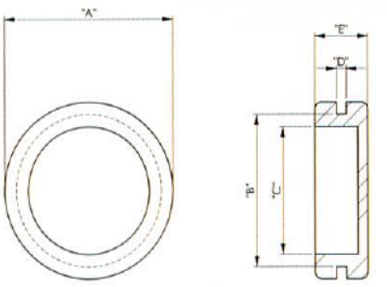

Features
- Thin top film can be pierced to allow a range of different sized wires to pass through
- Mounts flush to your outside panel

Material: TPE, RMS-262 • Color: Black					
Part No	Standard Pack: 1,000 per bag				
	"A"	Panel Hole Size "B"	"C"	"D"	"E"
DGB-2.5	.37 (9.4)	.25 (6.4)	.16 (4.1)	.03 (0.8)	.14 (3.6)
DGB-4	.50 (12.7)	.39 (9.9)	.25 (6.4)	.06 (1.5)	.26 (6.6)
DGB-5	.62 (15.7)	.49 (12.5)	.37 (9.5)		.25 (6.4)
DGB-6	.69 (17.5)	.43 (11)	.31 (8)		.31 (8)
DGB-7	.75 (19)	.63 (16)	.43 (11)		
DGB-10	1.00 (25.5)	.87 (22)	.72 (18.4)		
DGB-11	1.00 (25.5)	.75 (19)	.63 (16)		.28 (7)
DGB-13	1.18 (30)	1.00 (25.5)	.81 (20.5)		.31 (8)

PGSB
Closed Snap Bushing

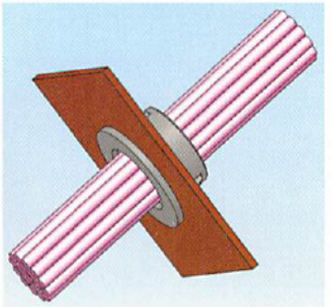

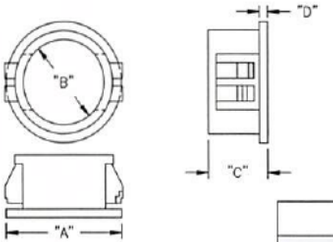

Features
- Easily snapped into hole with fingertip pressure
- Converts sharp-edged holes into smooth, insulated holes

Material: Nylon 6/6, RMS-01 • Color: Black							
Part No.	Panel Thknes. Range	Hole Diameter	"A" ± .020	"B" Ref.	"C"	"D"	Package
PGSB-0305	.063-.067 (1.6-1.7)	.189 (4.8)	.26 (6.5)	.13 (3.2)	.24 (6)	.050 (1.3)	1,000
PGSB-0710	.031-.071 (0.8-1.8)	.394 (10)	.48 (12.1)	.28 (7.2)	.26 (6.6)		
PGSB-1013	.031-.118 (0.8-3)	.512 (13)	.60 (15.3)	.40 (10.2)	.36 (9.1)		500
PGSB-1316	.055-.139 (1.4-3.5)	.630 (16)	.71 (18)	.50 (12.8)	.41 (10.4)	.060 (1.5)	
PGSB-1519	.039-.118 (1-3)	.748 (19)	.85 (21.7)	.60 (15.3)	.44 (11.1)		200
PGSB-1822	.035-.091 (0.9-2.3)	.866 (22)	.98 (24.8)	.72 (18.2)	.45 (11.5)		
PGSB-2428	.039-.130 (1-3.3)	1.102 (28)	1.24 (31.5)	.95 (24.1)	.44 (11.3)		
PGSB-2530	.039-.122 (1-3.1)	1.181 (30)	1.30 (33)	.98 (25)	.45 (11.5)		100
PGSB-2634	.039-.110 (1-2.8)	1.146 (34.2)	1.50 (38)	1.03 (26.2)	.45 (11.4)		

800-621-1892
Get quote
Angic Global Solutions 1-888-872-0690
https://www.AngicGlobal.com Sales@AngicGlobal.com

PGSA
Open Bushing A Series

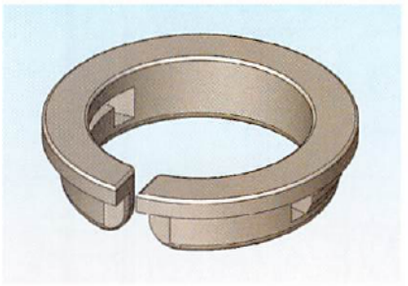

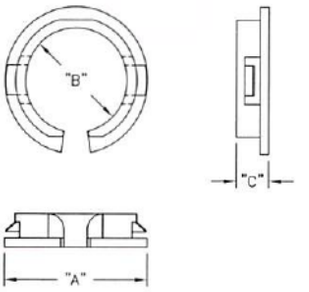

Features

- Split design allows side entry of wire bundle and retro-fit on pre-assembled harnesses

Material: Nylon 6/6, RMS-01 • Color: Black						
Part No.	Panel Thkns. Range	Hole Diameter	"A" Ref.	Max Holding Bundle Dia. "B"	"C"	Standard Pack
PGSA-0407A	.016 - .039 (0.4 - 1)	.272 (6.9)	.39 (9.9)	.19 (4.8)	.20 (5.1)	1,000
PGSA-1013A	.039 - .059 (1 - 1.5)	.512 (13)	.61 (15.5)	.38 (9.7)	.21 (5.3)	500
PGSA-1316A		.630 (16)	.72 (18.3)	.49 (12.4)		
PGSA-1519A		.748 (19)	.86 (21.8)	.59 (15)	.22 (5.6)	
PGSA-1822A	.031 - .063 (0.8 - 1.6)	.866 (22)	.97 (24.6)	.69 (17.5)		
PGSA-2024A1	.031 - .039 (0.8 - 1)	.945 (24)	1.02 (26)	.79 (20)	.21 (5.4)	
PGSA-2024A	.039 - .047 (1 - 1.2)				.21 (5.3)	
PGSA-2327A	.016 - .039 (0.4 - 1)	1.063-1.07 (27-27.2)	1.20 (30.6)	.91 (23)	.24 (6)	200
PGSA-2529A	.016 - .043 (0.4 - 1.1)	1.142 (29)	1.28 (32.5)	.98 (24.9)	.28 (7.1)	

PGSB-A
Open Bushing B Series

NEW

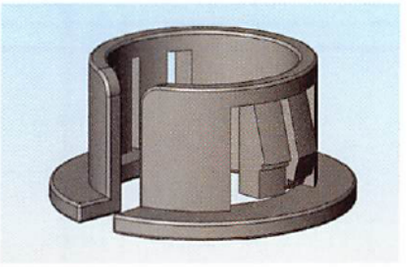

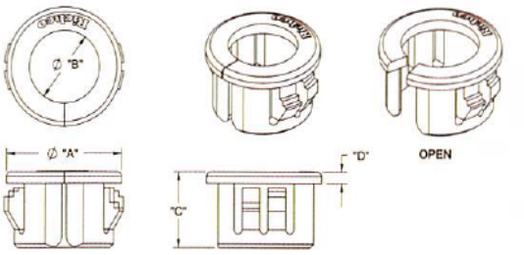

Features

- May be assembled into holes that already contain wires

PGSB-A			Mat'l: Nylon 6/6, RMS-01; Color: Black				
Part Number	Mounting Hole Diameter	Panel Thickness Range	"A"	"B" Max. Holding Bundle Dia.	"C"	"D"	Standard Package
PGSB-0609A	.375 (9.5)	.028-.067 (0.7-1.7)	.45 (11.4)	.260 (6.6)	.26 (6.5)	.051 (1.3)	1000
PGSB-1A		.031-.125 (0.8-3.2)	.42 (10.7)	.265 (6.7)	.390 (9.9)		
PGSB-2A	.437 (11.1)		.500 (12.7)	.312 (7.9)	.406 (10.3)	.063 (1.6)	
PGSB-1013A	.512 (13)	.031 -.138 (0.8-3.5)	.59 (14.9)	.35 (9)	.41 (10.5)	.059 (1.5)	500
PGSB-3A	.562 (14.3)	.031-.125 (0.8-3.2)	.640 (16.3)	.390 (9.9)	.406 (10.3)	.063 (1.6)	
PGSB-1216A	.630 (16)	.028-.130 (0.7-3.3)	.73 (18.6)	.48 (12.3)	.390 (9.9)	.039 (1)	
PGSB-1316A		.047-.138 (1.2-3.5)	.71 (18.0)	.41 (10.5)	.41 (10.5)	.063 (1.6)	
PGSB-1519A	.748 (19)	.047-.130 (1.2-3.5)	.81 (20.6)	.57 (14.5)	.43 (11)	.051 (1.3)	200
PGSB-1822A	.866 (22)	.039-.138 (1-3.5)	.98 (24.8)	.68 (17.3)	.45 (11.5)	.063 (1.6)	
PGSB-4A	1.0 (25.4)	.031-.125 (0.8-3.2)	1.047 (26.6)	.812 (20.6)	.406 (10.3)		
PGSB-5A	1.093 (27.8)		1.156 (29.4)	.875 (22.2)			
PGSB-6A	1.250 (31.8)		1.343 (34.1)	1.046 (26.6)			
PGSB-7A	1.375 (34.9)		1.468 (37.3)	1.171 (29.7)			
PGSB-8A	1.500 (38.1)		1.578 (40.1)	1.250 (31.7)	.421 (10.7)		
White color available by special order only.							

K

539-4060 Sam
Get quote
Angic Global Solutions 1-888-872-0690
https://www.AngicGlobal.com Sales@AngicGlobal.com

LTG
Liquid Tight Grommet

NEW

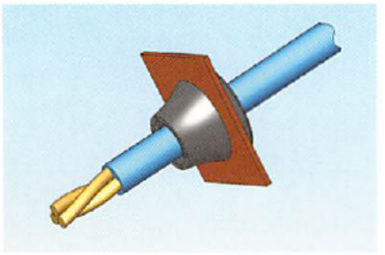

Style 1

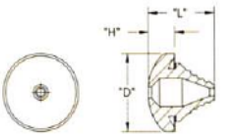

Style 2

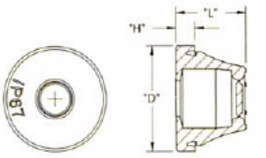

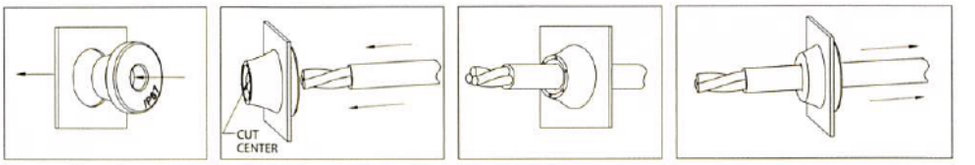

PRESS GROMMET INTO PANEL — CUT CENTER AS SHOWN AND INSERT CABLE THROUGH GROMMET — PULL BACK CABLE TO FORM SEAL

Features

- Provides dust and watertight seal
- Suitable for external applications
- Conform to IP67 standard
- Acts as a blanking plug until cable is installed
- Quick and easy to install

Part Number	Style	Color	Material	Panel Hole Size	Panel Thickness	Cable Size	"D" Ref.	"L" Ref.	"H" Ref.	Standard Pack
LTG-199017	1	Black	TPE, RMS-125	.49±.01 (12.5±0.25)	.02 - .08 (0.5 - 2)	.12 - .20 (3 - 5)	.78 (19.8)	.67 (17)	.28 (7.1)	1000
LTG-1	2	Grey	EPDM RMS-153	.500±.008 (12.7±0.2)			.79 (20)	.50 (12.8)	.27 (6.8)	
LTG-39897				.63±.01 (16±0.25)	.04 - .16 (1 - 4)	.20 - .26 (5 - 7)	.83 (21)	.74 (18.9)	.24 (6.2)	
LTG-34715				.75±.01 (19±0.25)		.26 - .39 (7 - 10)	.94 (23.9)	.77 (19.6)	.24 (6.1)	
LTG-34716				.91±.01 (23±0.25)		.39 - .55 (10 - 14)	1.10 (27.9)	.90 (22.9)	.26 (6.6)	500
LTG-43021				1.14±.01 (29±0.25)		.55 - .79 (14 - 20)	1.41 (35.8)	.96 (24.4)		250
LTG-2				1.50±.01 (38±0.25)		.79 - .94 (20 - 24)	1.81 (46)	1.14 (29)	.26 (6.5)	100
LTG-3				1.89±.01 (48±0.25)		.98 - 1.26 (25 - 32)	2.26 (57.5)	1.26 (32)	.32 (8)	
Parts Conform to IP67 Standard										

RGS
Grommet Sleeve

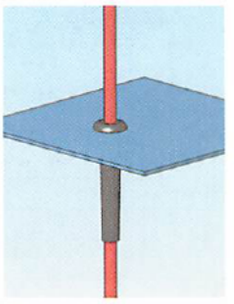

Fig. 1

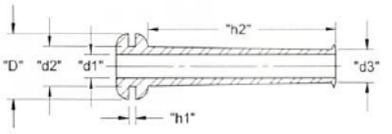

Fig. 2

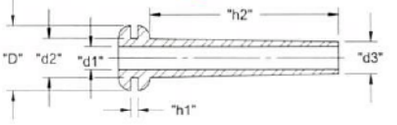

Fig. 3

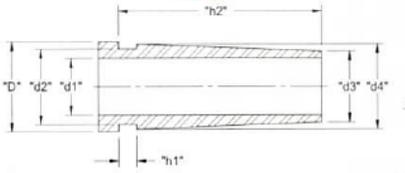

Fig. 4

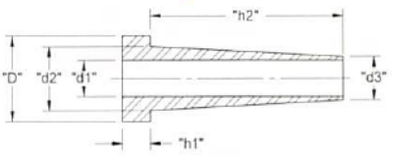

Fig. 5

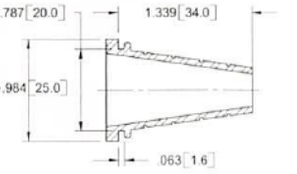

Note: Cable Range: .315-.669 (8-17)

Features

- Provides extra support and protection for cables and wires passing through panels

RGS					Standard Pack: 1,000 per bag			
Mat'l: PVC, RMS-25 Color: Black	"D"	"d1" Nom. Dia.	"d2"	"d3"	"d4"	"h1"	"h2"	Fig. #
RGS1-12461	.559 (14.2)	.240 (6.1)	.299 (7.6)	.311 (7.9)	-	.150 (3.8)	1.248 (31.7)	1
RGS1-60466		.201 (5.1)	.343 (8.7)	.280 (7.1)	-	.063 (1.6)	1.654 (42)	2
RGS1-50687		.252 (6.4)	.374 (9.5)	.311 (7.9)	-	.094 (2.4)	.563 (14.3)	
RGS1-12468	.551 (14)				-	.102 (2.6)	.906 (23)	
RGS2-12462	.594 (15.1)	.374 (9.5)	.500 (12.7)	.469 (11.9)	.563 (14.3)	.126 (3.2)	1.398 (35.5)	3
RGS2-51409	.752 (19.1)	.344 (8.7)		.480 (12.2)	.594 (15.1)	.031 (0.8)	1.055 (26.8)	
RGS3-40016	.374 (9.5)	.157 (4)	.280 (7.1)	.213 (5.4)	-	.102 (2.6)	.858 (21.8)	4
RGS3-15517	.386 (9.8)		.303 (7.7)	.220 (5.6)	-	.079 (2)	1.496 (38)	
RGS3-12463	.453 (11.5)	.268 (6.8)	.366 (9.3)	.366 (9.3)	-	.063 (1.6)	1.417 (36)	
RGS3-60218	.551 (14)	.244 (6.2)	.378 (9.6)	.315 (8)	-		1.626 (41.3)	
RGS3-60752	.563 (14.3)	.311 (7.9)	.445 (11.3)	.413 (10.5)	-	.126 (3.2)	1.500 (38.1)	
RGS3-12464	.752 (19.1)	.406 (10.3)	.559 (14.2)	.500 (12.7)	-			
RGS4-12312	See part drawing for dimensions.							5

K

800-621-1892
Angic Global Solutions 1-888-872-0690
https://www.AngicGlobal.com Sales@AngicGlobal.com
Get quote

SB
Snub Bushing

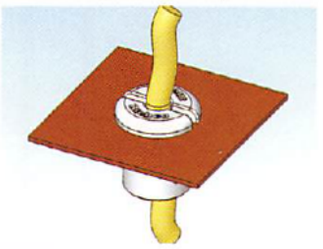

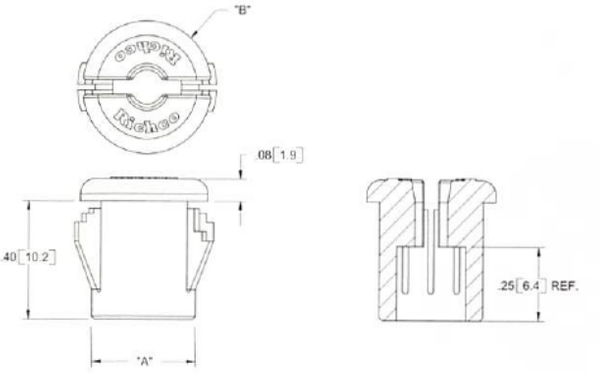

Features

- The cable is fed through the flexible ID then both are easily locked into the hole with fingertip pressure causing the grommet to close in firmly against the cable
- Provides insulation and wire retention

SB			Standard Pack: 1,000 per bag		
Mat'l: Nylon 6/6, RMS-01 Color: Black	Ø "A"	Ø "B"	Panel Hole Dia. ± .003 (0.08)	Nom. Panel Thickness	Approx. Cable Holding Dia.
SB-1	.36 (9.1)	.45 (11.4)	3/8 (9.5)	1/32, 1/16, 3/32, 1/8 (0.8, 1.6, 2.4, 3.2)	.15 (3.8)
SB-2	.43 (10.9)	.55 (14)	7/16 (11.1)		.22 (5.6)
SB-3	.49 (12.4)	.63 (16)	1/2 (12.7)		.28 (7.1)

PGSC
Snap Bushing

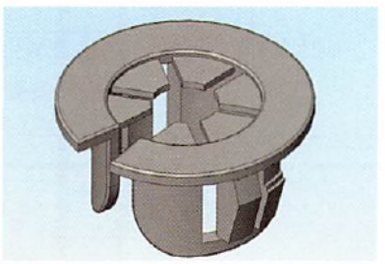

Features

- Wings adjust to accept various diameters and shapes
- Split design allows side entry of wire bundle and retro-fit on pre-assembled harnesses

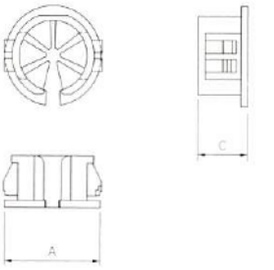

Material: Nylon 6/6, RMS-01 • Color: Black						
Part No.	Panel Thkns. Range	Hole Diameter	"A"	Max. Holding Bundle Dia. "B"	"C"	Standard Package
PGSC-1319A	.031-.118 (0.8-3)	.75-.75 (19.0-19.1)	.86 (21.8)	.50 (12.7)	.39 (9.9)	500
PGSC-1422A		.87-.88 (22.2-22.4)	.94 (23.8)	.56 (14.3)	.45 (11.5)	
PGSC-1926A		1.00-1.00 (25.4-25.5)	1.06 (27)	.75 (19)		200
PGSC-2128A		1.09-1.10 (27.8-28)	1.16 (29.5)	.82 (20.7)		

PGM
Push Grommet Hole Plug
M Series

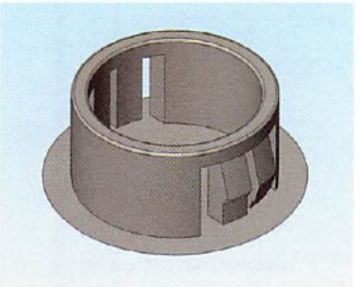

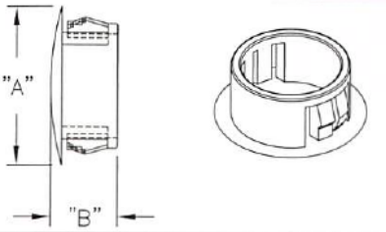

Features

- Plugs unused holes in panels or terminal boxes
- Easily snaps into pre-drilled holes

PGM			Mat'l Nylon 6/6, RMS-01; Color: Black		
Part Number	Panel Thickness Max.	Hole Diameter	"A" ± .20 (0.5)	"B" Ref.	Standard Package
PGM-4	.063 (1.6)	.185 - .193 (4.7 - 4.9)	.24 (6)	.20 (5.2)	1,000
PGM-6		.248 - .256 (6.3 - 6.5)	.30 (7.6)	.22 (5.6)	
PGM-7		.276 - .280 (7 - 7.1)	.43 (11)	.28 (7)	
PGM-8		.299 - .315 (7.6 - 8)	.37 (9.5)	.24 (6)	
PGM-9	.047 (1.2)	.374 - .378 (9.5 - 9.6)	.51 (13)	.26 (6.5)	
PGM-10	.055 (1.4)	.378 - .394 (9.6 - 10)		.24 (6)	
PGM-13	.083 (2.1)	.500 - .512 (12.7 - 13)	.67 (17)	.31 (8)	
PGM-16	.079 (2)	.626 - .630 (15.9 - 16)	.79 (20)	.30 (7.7)	500
PGM-19	.126 (3.2)	.744 - .748 (18.9 - 19)	.93 (23.5)	.41 (10.5)	
PGM-22	.118 (3)	.862 - .866 (21.9 - 22)	1.02 (26)	.38 (9.6)	
PGM-25	.126 (3.2)	1.000 - 1.008 (25.4 - 25.6)	1.10 (28)	.50 (12.7)	200
PGM-30		1.201 - 1.205 (30.5 - 30.6)	1.34 (34)	.51 (13)	

K

ANGIC GLOBAL SOLUTIONS
Get quote
Angic Global Solutions 1-888-872-0690
https://www.AngicGlobal.com Sales@AngicGlobal.com

BP
Body Plug

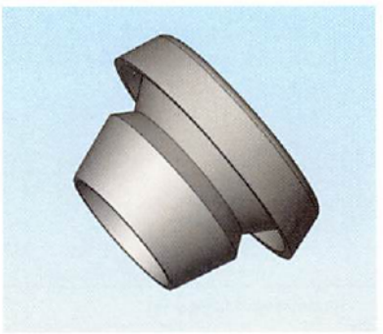

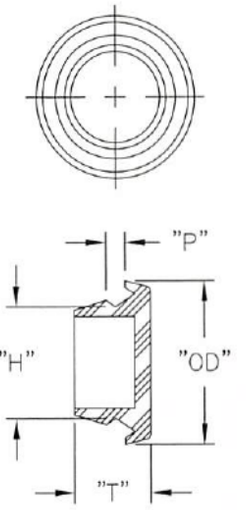

Features

- Ideal for plugging holes in metal panels
- Provides splash-proof seal
- Can be perforated to accommodate different wire sizes

Color: Black						
Part Number	Panel Hole Size "H"	Panel Thickness "P"	Outside Diameter "OD"	Body Plug Thickness "T"	Standard Pack per Bag	Material
BP-16230	.39 (9.9)	.03 - .08 (0.8 - 2)	.75 (19.1)	.47 (11.9)	1000	TPE, RMS-262
BP-16231	.47 (11.9)		.83 (21.1)			
BP-16232	.55 (14)		.91 (23.1)			
BP-16233	.63 (16)		.98 (24.9)			TPE, RMS-67
BP-16234	.71 (18)		1.06 (26.9)			TPE, RMS-262
BP-16236	.87 (22.1)		1.22 (31)			
BP-16238	1.18 (30)		1.54 (39.1)			

LTP
Liquid Tight Plug

NEW

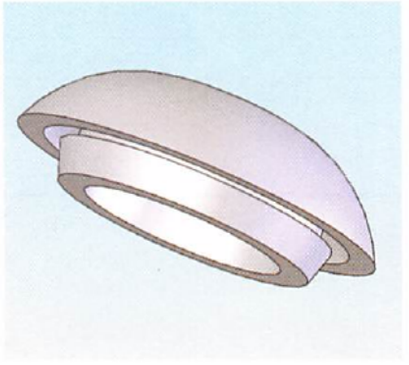

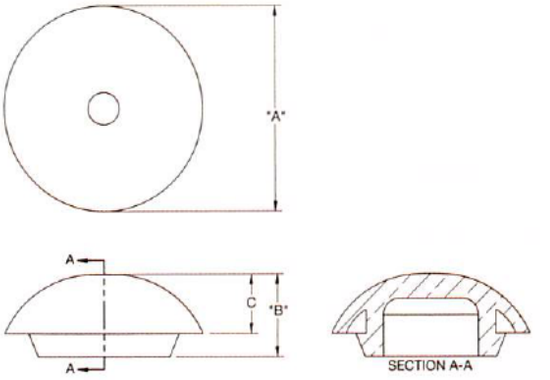

Features

- Plugs and seals holes
- Liquid tight - Tested to IP67 standard
- Installs easily with finger pressure

Part No.	Material: UL94 V0 Neoprene Rubber, RMS-190 Color: Black			Standard Pack: 1,000 per bag	
	"A" Head Diameter	"B" Overall Height	"C" Head Height	Mounting Hole Diameter ±.005 (0.13)	Maximum Panel Thickness
LTP-1	1.25 (31.75)	.50 (12.7)	.36 (9.14)	.875 (22.23)	.125 (3.2)
LTP-2	1.53 (39.01)	.54 (13.67)	.39 (9.91)	1.093 (27.76)	
LTP-3	1.80 (45.72)	.57 (14.48)	.42 (10.67)	1.375 (34.93)	

K

800-621-1892
Get quote
Angic Global Solutions 1-888-872-0690
https://www.AngicGlobal.com Sales@AngicGlobal.com

SRB-F/R
Strain Relief Bushing

NEW

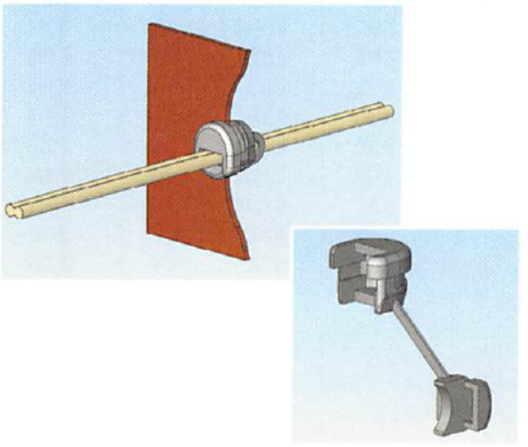

Features
- UL Approved strain relief bushings
- Absorbs the forces of push and pull that may be exerted on cords
- Each part can be mounted into two different mounting holes (Styles A & B shown below).
- SRPL-2 Tool is required for installation

• UL #E71558

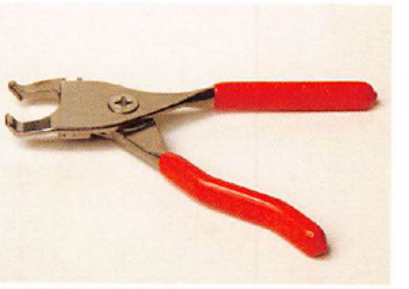

SRB Installation Tool Sold Separately
Part Number: SRPL-2

Mounting Holes
Style A

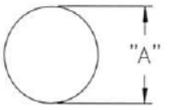

Style B
Anti-Rotation Hole

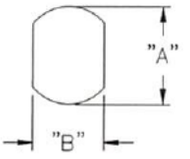

Bushing Dimensions

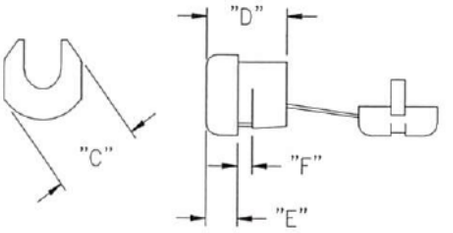

Key-Contour Style



R (ROUND) F (FLAT)

Note: SRB-F is for flat wires
SRB-R is for round wires

Material: Nylon 6/6, RMS-315 Color: Black								
Part No.	Standard Pack: 500 per bag							
	Wires Accommodated	Approx. Wire Size	Mounting Holes "A"	Mounting Holes "B"	"C" Ref.	"D" ± .010	"E" Ref.	"F" Max. Panel Thickness
SRB-F-1	SPT-1	.118X.220 (3X5.6)	.374 (9.5)	.343 (8.7)	.425 (10.8)	.406 (10.3)	.157 (4)	.063 (1.6)
SRB-F-3			.433 (11)	.390 (9.9)	.476 (12.1)			
SRB-F-6					.492 (12.5)		.126 (2.5)	.098 (2.5)
SRB-F-8	SPT-2	.146X.299 (3.71X7.6)	.500 (12.7)	.465 (11.8)	.547 (13.9)		.157 (4)	.063 (1.6)
		.150X.299 (3.8X7.6)	.516 (13.1)					
SRB-F-9		.146X.299 (3.71X7.6)	.500 (12.7)					.098 (2.5)
		.150X.299 (3.8X7.6)	.516 (13.1)					
SRB-R-1	SVI	.252 (6.4)	.500 (12.7)	.453 (11.5)	.559 (14.2)	.433 (11)	.165 (4.2)	.063 (1.6)
	SVT	.291 (7.4)	.516 (13.1)					
SRB-R-2	SVI	.252 (6.4)	.500 (12.7)					.098 (2.5)
	SVT	.291 (7.4)	.516 (13.1)					
SRB-R-3	SJT #18/3	.299 (7.6)	.626 (15.9)	.551 (14)	.701 (17.8)	.583 (14.8)	.220 (5.6)	.063 (1.6)
SRB-R-4					.693 (17.6)			.126 (3.2)
SRB-R-7	SJT #16/3	.323-.362 (8.2-9.2)			.701 (17.8)			.063 (1.6)
SRB-R-8					.681 (17.3)		.228 (5.8)	.126 (3.2)

K

Get quote
Angic Global Solutions 1-888-872-0690
https://www.AngicGlobal.com Sales@AngicGlobal.com

Conversion Charts

inches		mm
1/64	0.015625	0.396875
1/32	0.03125	0.79375
3/64	0.046875	1.190625
1/16	0.0625	1.5875
5/64	0.078125	1.984375
3/32	0.09375	2.38125
7/64	0.109375	2.77812
1/8	0.125	3.175
9/64	0.140625	3.571875
5/32	0.15625	3.96875
11/64	0.171875	4.365625
3/16	0.1875	4.7625
13/64	0.203125	5.159375
7/32	0.21875	5.55625
15/64	0.234375	5.953125
1/4	0.25	6.35
17/64	0. 265625	6.746875
9/32	0. 281250	7.14375
19/64	0. 286875	7.540625
5/16	0. 312500	7.9375
21/64	0.328125	8.334375
11/32	0.34375	8.73125
23/64	0.359375	9.128125
3/8	0.375	9.525
25/64	0.390625	9.921875
13/32	0.40625	10.31875
27/64	0.421875	10.715625
7/16	0.4375	11.1125
29/64	0.453125	11.509375
15/32	0.46875	11.90625
31/64	0.484375	12.303125
1/2	0.5	12.7

inches		mm
33/64	0.515625	13.096875
17/32	0.53125	13.49375
35/64	0.546875	13.890625
9/16	0.5625	14.2875
37/64	0.578125	14.684375
19/32	0.59375	15.08125
39/64	0.609375	15.478125
5/8	0.625	15.875
41/64	0.640625	16.271875
21/32	0.65625	16.66875
43/64	0.671875	17.065625
11/16	0.6875	17.4625
45/64	0.703125	17.859375
23/32	0.71875	18.25625
47/64	0.734375	18.653125
3/4	0.75	19.05
49/64	0.765625	19.446875
25/32	0.78125	19.84375
51/64	0.796875	20.240625
13/16	0.8125	20.6375
53/64	0.828125	21.034375
27/32	0.84375	21.43125
55/64	0.859375	21.828125
7/8	0.875	22.225
57/64	0.890625	22.621875
29/32	0.90625	23.01875
59/64	0.921875	23.415625
15/16	0.9375	23.8125
61/64	0.953125	24.209325
31/32	0.96875	24.60625
63/64	0.984375	25.003125
1	1.00	25.4

in.	mm
0.001	0.0254
0.002	0.0508
0.003	0.0762
0.004	0.1016
0.005	0.1270
0.006	0.1524
0.007	0.1778
0.008	0.2032
0.009	0.2286

in.	mm
0.01	0.254
0.02	0.508
0.03	0.762
0.04	1.016
0.05	1.270
0.06	1.524
0.07	1.778
0.08	2.032
0.09	2.286

in.	mm
0.1	2.54
0.2	5.08
0.3	7.62
0.4	10.16
0.5	12.70
0.6	15.24
0.7	17.78
0.8	20.32
0.9	22.86

°C	°F	°C	°F	°C	°F	°C	°F	°C	°F	°C	°F
-50	-58	50	122	150	302	250	482	350	662	450	842
-45	-49	55	131	155	311	255	491	355	671	455	851
-40	-40	60	140	160	320	260	500	360	680	460	860
-35	-31	65	149	165	329	265	509	365	689	465	869
-30	-22	70	158	170	338	270	518	370	698	470	878
-25	-13	75	167	175	347	275	527	375	707	475	887
-20	-4	80	176	180	356	280	536	380	716	480	896
-15	5	85	185	185	365	285	545	3.85	725	485	905
-10	14	90	194	190	374	290	554	390	734	490	914
-5	23	95	203	195	383	295	563	395	743	495	923
0	32	100	212	200	392	300	572	400	752	500	932
5	41	105	221	205	401	305	581	405	761	505	941
10	50	110	230	210	410	310	590	410	770	510	950
15	59	115	239	215	419	315	599	415	779	515	959
20	68	120	248	220	428	320	608	420	788	520	968
25	77	125	257	225	437	325	617	425	797	525	977
30	86	130	266	230	446	330	626	430	806	530	986
35	95	135	275	235	455	335	635	435	815	535	995
40	104	140	284	240	464	340	644	440	824	540	1004
45	113	145	293	245	473	345	653	445	833	545	1013

-800-621-1892
Get quote
Angic Global Solutions 1-888-872-0690
https://www.AngicGlobal.com Sales@AngicGlobal.com

RMS Table Terminology

RMS Number

Richco "Raw Material Specification" identification number. For the latest RMS information, please visit www.richco-inc.com or contact your local Richco Representative.

UL® File Number

Underwriter's Laboratories Inc.®, hereafter referred to as "UL®", plastics classification number, which is used to describe the performance of the material shown. Tests conducted by UL® may include the determination of material flammability (burning characteristics), ignition characteristics from various thermal and electrical sources, electrical tracking and other electrical characteristics, physical and mechanical characteristics, and analytical tests. In addition, the effect of long-term exposure to elevated temperature (air-oven aging), water, ultraviolet light, cold, etc. on property-retention may be evaluated.

For detailed information and to access the specific "Yellow Card" referenced, please contact your local sales office or visit Underwriters Laboratories website; www.ul.com and click on "Online Certifications Directory."

UL® Flame Rating

UL® 94 classifications V0, V1, V2 and HB describe the flame retardancy levels for a given resin. V0 rated resins typically have the highest flame resistance followed by V1, V2 and HB.

Material Operating Temperatures

The Material Temperature Ranges shown are based on recommendations of the respective resin manufacturers. The values shown are for reference to aid in material selection for your application. Because each resin manufacturer uses their own methods to evaluate and rate the performance of their resins, the temperature ranges shown cannot necessarily be used to compare materials directly.

RoHS and Environmental Legislation of Plastics

The European Union recently adopted the Directive, the Restriction of Hazardous Substances Directive 2002/95/EC, here after referred to as RoHS, which restricts the use of lead, mercury, cadmium, hexavalent chromium, polybrominated biphenyls (PBB), and polybrominated diphenyl ethers (PBDE) in electrical and electronic products by July 1, 2006. A "Y" indicates that Richco has a certification from the individual resin manufacturer, which states chemical compliance to RoHS. A "N" indicates that Richco has a certification from the individual resin manufacturer which states chemical content and its variance to RoHS. An asterisk(*) indicates data was not available at time of publication. Please see our website or contact your local Richco Representative for the necessary documentation.

The Waste Electrical and Electronic Equipment European Parliament Directive 2002/96/EC, hereafter referred to as WEEE, establishes recovery, reuse, and recycling targets for each of ten categories of WEEE waste. The requirements are to be met by December 31, 2006.

Richco Inc. strongly supports efforts to create environmentally friendly and sustainable products. Richco Inc. is committed to compliance with all applicable laws and regulations of RoHS.

Please contact your local Richco office or Representative for support in obtaining any necessary compliance documentation.

Definitions of Material Descriptions

ABS = Acrylonitrile-butadiene-styrene
Acetal = Polyacetal
ASA/AES = Acrylic-styrene-acrylonitrile/ Acrylonitrile-ethylene-propylene-styrene-alloy
CAP = Cellulose acetate propionate
CPVC = Chlorinated polyvinyl chloride
EPDM = Ethylene-propylene-diene-monomer
EVA = Polyethylene-vinyl acetate
FEP = Fluorinated ethylene propylene copolymer
HDPE = High density polyethylene
HIPS = High impact polystyrene
LCP = Liquid Crytsal Polymer
LDPE = Low density polyethylene
Nitrile Rubber = Acrylonitrile rubber
Nylon = Polyamide (PA)
PBT = Polybutylene terephthalate
PC = Polycarbonate
PE = Polyethylene
PEI = Polyether imide
PP = Polypropylene
PPE/PS = Polyphenylene ether/polystyrene alloy
PPE/SB = Polyphenylene ether/styrene-butadiene alloy
PPHOX = Polyphenylene oxide
PPS = Polyphenylene sulfide
PS = Polystyrene
PSU = Polysulfone
PU = Polyurethane
PVC = Polyvinyl chloride
PVDF = Polyvinylidene fluoride
SEBS = Styrene-ethylene butylene-styrene block copolymer
SIR = Silicone molding compound
TPE = Thermoplastic elastomer
TPR = Thermoplastic rubber

An asterisk(*) indicates data was not available at time of publication. Please see our website or contact your local Richco Representative for the necessary documentation.

RAW MATERIAL SPECIFICATION/DISCLAIMER OF WARRANTY: These Raw Material Specifications shall not be construed as creating an express warranty of description. The specifications are approximate and intended to serve only as guides and not as the basis of any sale, agreement or contract of goods sold by Richco, Inc. Richco, Incorporated reserves the right to change the raw material on any of its goods contained in this catalog without notice to any buyer. Further, these Raw Material Specifications have been provided by the manufacturer and Richco, Inc. does not warrant their accuracy.

ANGIC Get quote
Angic Global Solutions 1-888-872-0690
https://www.AngicGlobal.com Sales@AngicGlobal.com

RMS Specifications

RMS No.	Material Description	UL File No.	UL Flame Rating	RoHS Compliance	Material Temperature Range °C			°F		
01	Nylon 6/6	E70062	V-2	Y	-40	-	85	-40	-	185
03	PC	E45587	HB	Y	-40	-	115	-40	-	239
04	PVC-Rigid	E41877	V-0	Y	0	-	50	32	-	122
05	PPE/PS	E121562	V-1	Y	-40	-	110	-40	-	230
06	LDPE	NO U.L.	Not rated	Y	-40	-	65	-40	-	149
07	HDPE	E41877	V-2	Exempt	0	-	50	32	-	122
08	PP	E63499	HB	Y	0	-	65	32	-	149
09	ABS	E41871	HB	Y	0	-	60	32	-	140
10	PP	E118847	HB	Y	0	-	65	32	-	149
11	CPVC	E106426	V-0	Y	0	-	50	32	-	122
12	CAP	E146408	HB	Y	-20	-	50	-4	-	122
13	HDPE	NO U.L.	Not rated	Y	-20	-	65	-4	-	149
14	Acetal	E38860	HB	Y	-50	-	90	-58	-	194
15	Acrylic adhesive / Urethane foam tape / PE liner	MH16770	Not rated	Y	0	-	85	32	-	185
16	HIPS	E55453	HF-1	Y	-20	-	160	-4	-	320
17	Nylon 6/6	E41938	HB	Y	-40	-	85	-40	-	185
18	Nylon 6/6, 33% Glass Filled	E41938	HB	Y	-30	-	140	-22	-	284
19	Nylon 6/6	E70062	V-0	Y	-40	-	105	-40	-	221
21	Nylon 66/6	E41938	HB	Y	-40	-	65	-40	-	149
23	PC	E121562	V-0	Y	-40	-	115	-40	-	239
24	Acrylic adhesive / Urethane foam tape / PE liner	NO U.L.	Not rated	Y	-20		60	-4		149
25	PVC - Flexible	NO U.L.	Not rated	Y	0	-	50	32	-	122
26	PVC - Flexible	E54709 (M)	V-0	Y	0	-	105	32	-	221
32	PVC	NO U.L.	Not rated	Y	0	-	50	32	-	122
33	Silicone rubber fiberglass composite	E59150(N)	HB	Y	-60	-	180	-76	-	356
34	Rubber adhesive / PE foam tape / PE liner	NO U.L.	Not rated	Y	-40	-	71	-40	-	160
35	Nylon 6/6, 14% Glass Filled	E41938	HB	Y	-20	-	65	-4	-	149
37	Nylon 6/6	E41613 (M)	V-2	Y	-40	-	65	-40	-	149
38	Nylon 6, 30% Glass Filled	NO U.L.	HB	Y	-20	-	140	-4	-	284
39	Acetal	E66288	HB	Y	-40	-	100	-40	-	212
40	Nylon 6/6	E41938	V-2	Y	-40	-	85	-40	-	185
42	TPR	E80017	HB	Y	-60	-	135	-76	-	275
43	Nylon 6/6	E79900	V-0	Y	-40	-	120	-40	-	248
45	Nylon 6/6 Heat Stabilized	E41938	HB	Y	-40	-	85	-40	-	185
46	Nylon 66 U.V. Stabilized	E161693 / E70062	V-2	Y	-40	-	85	-40	-	185
47	Nylon 6/6 Heat Stabilized	E41938	V-2	Y	-40	-	115	-40	-	239
48	Nylon 6/6	E41871	V-2	Y	-40	-	80	-40	-	176
49	Nylon 6/6, 25% Glass Filled	E41871	V-2	Y	-40	-	130	-40	-	266
50	PPS, 40% Glass Filled	E54700	V-0	Y	-40	-	130	-40	-	266
51	PSU	E41871	V-1	Y	0	-	155	32	-	311
52	Nylon 6	E41871	V-2	Y	-40	-	65	-40	-	149
53	PBT	E101788	V-0	Y	-30	-	120	-22	-	248
54	PP	E118847	HB	Y	0	-	65	32	-	149
55	PVC-Flexible	E137220	V-0	Y	-35	-	50	-31	-	122
56	Nylon 4/6	E172082	V-2	Y	-40	-	152	-40	-	306
57	HDPE	NO U.L.	Not rated	Y	0		50	32		122
58	Nylon 6	NO U.L.	Not rated	Y	-20	-	85	-4	-	185
60	Nylon 6	E36632	HB	Y	-40	-	120	-40	-	248
61	Nylon 4/6	E172082	V-2	Y	-40	-	152	-40	-	306
62	Nylon 6	E41797	V-2	Y	-40	-	85	-40	-	185
64	PU	E177325 (M)	HB	Y	0	-	50	32	-	122
65	Acrylic adhesive / Polyester foam tape / PE liner	NO U.L.	Not rated	Y	-18	-	121	0	-	250
66	Nylon 6/6, F. R.	E84658 (N)	V-0	Y	-40	-	65	-40	-	149
67	TPR	E80017 (M)	HB	Y	-60	-	90	-76	-	194
68	Rubber adhesive / Polyester foam tape / PE liner	NO U.L.	Not rated	Y	-18	-	82	0	-	180
70	PVC	E86418 (M)	V-0	Y	0	-	50	32	-	122
71	Nylon 6	E36632	V-2	Y	-40	-	85	-40	-	185
72	PC	E123529	V-2	Y	-40	-	80	-40	-	176
73	Nylon 6/6 U.V. Stabilized	E41938 (M)	HB	Y	-40	-	85	-40	-	185
74	Nylon 6/6	E41938	V-2	Y	-40	-	85	-40	-	185
75	Nylon 6/6	E116324	V-0	Y	-40	-	85	-40	-	185
76	TPR	E80017	HB	Y	-50	-	90	-58	-	194
78	Nylon 6	E79900	HB	Y	-40	-	100	-40	-	212
79	PC	E50075	V-2	Y	-40	-	105	-40	-	221

An asterisk(*) indicates data was not available at time of publication. Please see our website or contact your local Richco Representative for the necessary documentation.

RAW MATERIAL SPECIFICATION/DISCLAIMER OF WARRANTY: These Raw Material Specifications shall not be construed as creating an express warranty of description. The specifications are approximate and intended to serve only as guides and not as the basis of any sale, agreement or contract of goods sold by Richco, Inc. Richco, Incorporated reserves the right to change the raw material on any of its goods contained in this catalog without notice to any buyer. Further, these Raw Material Specifications have been provided by the manufacturer and Richco, Inc. does not warrant their accuracy.

-800-621-1892
Get quote
Angic Global Solutions 1-888-872-0690
https://www.AngicGlobal.com Sales@AngicGlobal.com

RMS SPECIFICATIONS

RMS No.	Material Description	UL File No.	UL Flame Rating	RoHS Compliance	Material Temperature Range °C			Material Temperature Range °F		
80	TPR	E80017	HB	Y	-40	-	50	-40	-	122
81	Nylon 6/6	E41797	V-2	Y	-40	-	80	-40	-	176
83	PVC	NO U.L.	Not rated	Y	0	-	50	32	-	122
84	Nylon 6/6	E39806	V-2	Y	-40	-	85	-40	-	185
85	Nylon 6	NO U.L.	Not rated	Y	-40	-	100	-40	-	212
86	PP	NO U.L.	Not rated	Y	0	-	65	32	-	149
87	Nylon 6	E41797	V-0	Y	-40	-	120	-40	-	248
88	Nylon 6 Heat Stabilized	E36632	HB	Y	-40	-	120	-40	-	248
91	Nylon 6/6	E88499	Not rated	Y	-20	-	120	-4	-	248
92	Acrylic adhesive / Acrylic foam tape / Paper liner	NO U.L.	Not rated	Y	-40	-	93	-40	-	200
93	Acrylic adhesive / PE foam tape / PE liner	NO U.L.	Not rated	Y	-40	-	70	-40	-	158
94	PP	NO U.L.	Not rated	Y	0	-	65	32	-	149
95	Nylon 6	E147510	V-0	Y	-40	-	150	-40	-	302
96	Hot melt adhesive	R6022	Not rated	Y	-		-	-		-
98	TPE	NO U.L.	Not rated	Y	-40	-	120	-40	-	248
99	Acrylic adhesive / PU foam tape / PE liner	NO U.L.	Not rated	Y	-40		100	-40		212
100	TPE	NO U.L.	Not rated	Y	-40	-	70	-40	-	158
102	Rubber adhesive / PE foam tape / PE liner	MH15436	Not rated	Y	-18	-	66	0	-	150
103	Nylon 66/6	E41871	V-0	Y	-40	-	65	-40	-	149
104	Nylon 6/6, 25% Glass Filled	E41938	V-0	Y	-40	-	130	-40	-	266
105	PPE/SB	E41871	V-0	Y	-30	-	130	-22	-	266
106	Nylon 6 Heat Stabilized	E36632	V-2	Y	-40	-	120	-40	-	248
107	PC	E146413	V-2	Y	-40	-	110	-40	-	230
109	Nylon 4/6 Heat stabilized	E119177	V-2	Y	-40	-	152	-40	-	306
110	PBT, F.R. 30% Glass	E130155	V-0	Y	-30		140	-22		284
111	PBT	E45575	V-0	Y	-30	-	170	-22	-	338
112	Nylon 6/6, 25% Glass Filled	E135532	V-0	Y	-40	-	139	-40	-	282
113	Acrylic adhesive / PE foam tape / PE liner	NO U.L.	Not rated	Y	-18	-	107	0	-	225
114	ABS	E49895	HB	Y	0	-	85	32	-	185
115	Nylon 6/6	E41938	V-2	Y	-30	-	85	-22	-	185
116	Nylon 6/6	NO U.L.	Not rated	Y	-20	-	85	-4	-	185
117	Polystyrene	E140692	V-2	Y	-20	-	50	-4	-	122
118	PVC-Flexible	NO U.L.	Not rated	Y	0	-	50	32	-	122
119	Rubber adhesive / PE foam tape / PE liner	NO U.L.	Not rated	Y	18	-	65	65	-	149
120	Nylon 6	E119177	V-2	Y	-40	-	152	-40	-	306
121	Acetal	E66288	HB	Y	-50	-	90	-58	-	194
123	Silicone rubber	E205753	HB	Y	-40	-	150	-40	-	302
124	PP	E41877	V-2	Y	0	-	80	32	-	176
125	TPR	NO.U.L.	Not rated	Y	-40	-	125	-40	-	257
126	PP	NO U.L.	Not rated	Y	0	-	65	32	-	149
127	Acetal	NO U.L.	Not rated	Y	-50	-	90	-58	-	194
128	PE foam tape	NO U.L.	Not rated	Y	18	-	65	65	-	149
129	Rubber adhesive / Polyester foam tape / PE liner	NO U.L.	Not rated	Y	18	-	65	65	-	149
130	PPE/PS	E45587	V-2	Y	-40	-	110	-40	-	230
131	Rubber adhesive / Rubber foam tape / PE liner	NO U.L.	Not rated	Y	-40	-	85	-40	-	185
132	Acrylic adhesive / Urethane foam tape / PE liner	MH17478	Not rated	Y	-34	-	150	-30	-	302
133	Nylon 6	E79900	HB	Y	-40	-	57	-40	-	135
134	PE	NO U.L.	Not rated	Y	0	-	65	32	-	149
135	Rubber adhesive / Silicone foam tape / PE liner	E57750	V-0	Y	-29	-	149	-20	-	300
136	Acrylic adhesive / Polyethylene foam tape / PE liner	NO U.L.	Not rated	Y	-40		60	-40		140
137	PC	E41179	V-2	Y	-40	-	125	-40	-	257
138	Acetal	E45034	HB	Y	-50	-	100	-58	-	212
139	Nylon 6/6	E53898	HB	Y	-40	-	105	-40	-	221
140	PBT	E41613	V-0	Y	-30	-	140	-22	-	284
141	PVDF	E54699	V-0	Y	-30	-	50	-22	-	122
142	PE	NO U.L.	Not rated	Y	0	-	70	32	-	158
143	Acrylic adhesive / PE foam tape / PE liner	NO U.L.	Not rated	Y	-40	-	70	-40	-	158
144	PVC	NO U.L.	Not rated	Y	0	-	50	32	-	122
145	PPE/PS	E45329	V-0	Y	-30	-	80	-22	-	176
146	Nylon 6/6	E41797	V-0	Y	-40	-	85	-40	-	185
147	Nylon 6/6	E141008	V-2	Y	-40	-	85	-40	-	185
148	Nylon 6/6	E70062	HB	Y	-40	-	85	-40	-	185
149	ASA/AES	E44741	HB	Y	-40	-	60	-40	-	140
150	PP	NO U.L.	Not rated	Y	0	-	65	32	-	149

An asterisk(*) indicates data was not available at time of publication. Please see our website or contact your local Richco Representative for the necessary documentation.

RAW MATERIAL SPECIFICATION/DISCLAIMER OF WARRANTY: These Raw Material Specifications shall not be construed as creating an express warranty of description. The specifications are approximate and intended to serve only as guides and not as the basis of any sale, agreement or contract of goods sold by Richco, Inc. Richco, Incorporated reserves the right to change the raw material on any of its goods contained in this catalog without notice to any buyer. Further, these Raw Material Specifications have been provided by the manufacturer and Richco, Inc. does not warrant their accuracy.

ANGIC
Get quote
Angic Global Solutions 1-888-872-0690
https://www.AngicGlobal.com Sales@AngicGlobal.com

RMS Specifications

RMS No.	Material Description	UL File No.	UL Flame Rating	RoHS Compliance	Material Temperature Range °C			°F		
151	PP Conductive	E45195	HB	Y	0	-	65	32	-	149
152	Aluminum	NO U.L.	Not rated	Exempt	-		-	-		-
153	EPDM Rubber	NO U.L.	Not rated	Y	-40	-	110	-40	-	230
154	Nylon 6	E76261	V-2	Y	-30	-	85	-22	-	185
155	PE	NO U.L.	Not rated	Y	0	-	65	32	-	149
156	Nylon 66	E53664	V-0	Y	-40		120	-40		248
157	Nylon 6 Heat Stabilized	NO U.L.	Not rated	Y	-40	-	130	-40	-	266
158	TPV	E80017	HB	Y	-50	-	90	-58	-	194
159	Nylon 6	E47960	V-2	Y	-30	-	85	-22	-	185
160	Acetal	E45034	HB	Y	-50	-	90	-58	-	194
161	PC	E41179	V-2	Y	-40	-	125	-40	-	257
162	PEI	E247337	V-0	Y	-40	-	200	-40	-	392
163	HIPS	E108538	HB	Y	-20	-	80	-4	-	176
164	Nylon 6/6	E70062	V-2	Y	-40	-	115	-40	-	239
165	Nylon 6/6	E70062	V-2	Y	-40	-	85	-40	-	185
166	TPR	NO U.L.	Not rated	Y	-40	-	50	-40	-	122
167	TPR	E80017	HB	Y	-40	-	50	-40	-	122
168	TPR	E80017	HB	Y	-40	-	50	-40	-	122
169	Nylon 6/6	E132701	V-0	Y	-40	-	140	-40	-	284
170	Ceramic	NO U.L.	Not rated	Y	-		-	-		-
171	ABS	E56070	V-0	Y	0	-	85	32	-	185
172	Nylon 6/6 Heat Stabilized	E41938	HB	Y	-40	-	95	-40	-	203
173	Nylon 6, 25% Glass Filled	E76261	HB	Y	-20	-	140	-4	-	284
174	Nylon 6/6	E86615	HB	Y	0	-	65	32	-	149
175	Steel	NO U.L.	Not rated	Y	-		-	-		-
176	PVC	E179500	V-0	Y	-30	-	100	-22	-	212
177	PP	E54080	V-2	Y	0	-	65	32	-	149
178	Nylon 6	E195508	V-0	Y	-40	-	90	-40	-	194
179	Nylon 6/6	E86615	HB	Y	-20	-	65	-4	-	149
180	EPDM Rubber	NO U.L.	Not rated	Y	-20	-	90	-4	-	194
181	PC	E121254	V-2	Y	-40	-	100	-40	-	212
182	PP/TPR Alloy	E80017	HB	Y	-30	-	90	-22	-	194
183	HDPE	NO U.L.	Not rated	Y	0	-	65	32	-	149
184	LCP	E83005	V-0	Y	0	-	130	32	-	266
185	SEBS	NO U.L.	Not rated	Y	-		-	-		-
186	PVC-Rigid	NO U.L.	Not rated	Y	-10	-	50	18	-	122
187	PVC-Rigid	NO U.L.	Not rated	Y	-20	-	70	-4	-	158
188	PVC-Rigid	NO U.L.	Not rated	Y	-20	-	60	-4	-	140
189	Nylon 66, 15% Glass Filled	NO U.L.	Not rated	y	-20	-	85	-4	-	185
190	SBR	E228322	Not rated	y	-40	-	50	-40	-	122
191	PVC-Rigid	NO U.L.	Not rated	Y	0	-	50	32	-	122
192	Nylon 11 coating	NO U.L.	Not rated	y	-		-	-		-
193	PVC-Rigid	NO U.L.	Not rated	Y	0	-	50	32	-	122
194	Aluminum	NO U.L.	Not rated	Exempt	-		-	-		-
195	PVC-Rigid	NO.U.L.	Not rated	Y	0	-	50	32	-	122
196	PVC-Rigid	NO U.L.	Not rated	Y	0	-	50	32	-	122
197	Stainless Steel	NO U.L.	Not rated	Y	-		-	-		-
198	Steel	NO U.L.	Not rated	Y	-		-	-		-
199	Aluminum	NO U.L.	Not rated	Y	-		-	-		-
200	PVC Coating	NO U.L.	Not rated	Y	0	-	50	32	-	122
201	Nitrile Rubber	NO U.L.	Not rated	y	-40	-	80	-40	-	176
202	Acetal	E38860	HB	Y	-50	-	90	-58	-	194
203	Stainless Steel	NO U.L.	Not rated	Exempt	-		-	-		-
204	PC	E121562	HB	Y	-40	-	110	-40	-	230
205	Nylon 6/6	E116324	V-0	Y	-40	-	100	-40	-	212
206	1050 Spring Steel	NO U.L.	Not rated	y	-		-	-		-
207	Natural Rubber	NO U.L.	Not rated	Y	0		50	32		122
208	PVC	NO U.L.	Not rated	Y	0		50	32		122
209	Silicone Oil	NO U.L.	Not rated	Y	-		-	-		-
210	Silicone Rubber	NO U.L.	Not rated	Y	-		-	-		-
211	Nylon 6/6	NO U.L.	Not rated	Y	-40		65	-40		149
212	Carbon Steel 1566	NO U.L.	Not rated	Y	-		-	-		-

An asterisk(*) indicates data was not available at time of publication. Please see our website or contact your local Richco Representative for the necessary documentation.

RAW MATERIAL SPECIFICATION/DISCLAIMER OF WARRANTY: These Raw Material Specifications shall not be construed as creating an express warranty of description. The specifications are approximate and intended to serve only as guides and not as the basis of any sale, agreement or contract of goods sold by Richco, Inc. Richco, Incorporated reserves the right to change the raw material on any of its goods contained in this catalog without notice to any buyer. Further, these Raw Material Specifications have been provided by the manufacturer and Richco, Inc. does not warrant their accuracy.

ANGIC Get quote
Angic Global Solutions 1-888-872-0690
https://www.AngicGlobal.com Sales@AngicGlobal.com

RMS SPECIFICATIONS

RMS No.	Material Description	UL File No.	UL Flame Rating	RoHS Compliance	Material Temperature Range °C		°F	
213	TPR	NO U.L.	Not rated	Y	-50	90	-58	194
214	TPR	NO U.L.	Not rated	Y	-50	90	-58	194
215	PC	E157291	V-2	Y	-40	125	-40	257
216	Black Oxide Coating	NO U.L.	Not rated	Y	-	-	-	-
217	Brass/Nickel Tin Plating	NO U.L.	Not rated	Y	-	-	-	-
218	PC	E121562	HB	Y	-40	100	-40	212
219	Zinc Plating	NO U.L.	Not rated	Y	-	-	-	-
220	Nylon 6/6	E41938	V-2	Y	-40	85	-40	185
221	Nylon 6/6 U.V. Stabilizer	E41938	V-2	Y	-40	85	-40	185
222	Nylon 6/6, 30% Glass Filled	E84658	V-0	Y	-30	130	-22	266
223	ABS	E162823	V-0	Y	0	60	32	140
224	Stainless Steel	NO U.L.	Not rated	Y	-	-	-	-
225	PE Coating	NO U.L.	Not rated	Y	0	65	32	149
226	Modified Copolymer PE Adhesive	NO U.L.	Not rated	Y	-	-	-	-
227	Stainless Steel	NO U.L.	Not rated	Exempt	-	-	-	-
228	Stainless Steel	NO U.L.	Not rated	Y	-	-	-	-
229	Nickel Chrome Plating	NO U.L.	Not rated	Y	-	-	-	-
230	Stainless Spring Steel	NO U.L.	Not rated	Y	-	-	-	-
231	Brass	NO U.L.	Not rated	Exempt	-	-	-	-
232	Mild Steel	NO U.L.	Not rated	Exempt	-	-	-	-
233	Soft Steel	NO U.L.	Not rated	Y	-	-	-	-
234	Nickel Plating	NO U.L.	Not rated	Y	-	-	-	-
235	Zinc Bichromate Plating	NO U.L.	Not rated	Y	-	-	-	-
236	Zinc Plating	NO U.L.	Not rated	Y	-	-	-	-
237	Mild Steel	NO U.L.	Not rated	Y	-	-	-	-
238	Spring Steel	NO U.L.	Not rated	y	-	-	-	-
239	Acrylic Paint	NO U.L.	Not rated	Y	-	-	-	-
240	Rubber - Nylon Fiber	NO U.L.	Not rated	Y	-	-	-	-
241	Neoprene Rubber	NO U.L.	Not rated	Y	-40	80	-40	176
242	Steel	NO U.L.	Not rated	Y	-	-	-	-
243	Soft Steel	NO U.L.	Not rated	Y	-	-	-	-
244	Nylon 66	E41938	V-2	Y	-40	85	-40	185
245	Copper Flat Wire	NO U.L.	Not rated	Exempt	-	-	-	-
246	Tin Plating	NO U.L.	Not rated	Y	-	-	-	-
247	Aluminum	NO U.L.	Not rated	Y	-	-	-	-
248	Nylon 6/6	E41938	V-2	Y	-40	85	-40	185
249	PE Hook	NO U.L.	Not rated	Y	0	60	32	140
250	Nylon Buckle	NO U.L.	Not rated	Y	-40	65	-40	149
251	Nylon Loop	NO U.L.	Not rated	Y	-40	65	-40	149
252	Ferrite Terminal	NO U.L.	Not rated	Exempt	-	-	-	-
253	Polyester / PP	NO U.L.	Not rated	Y	-	-	-	-
254	Stainless Steel	NO U.L.	Not rated	Exempt	-	-	-	-
255	PP/Polyester Fiber	E168806	V-0	Y	-	-	-	-
256	ABS	E56070	V-0	Y	0	85	32	185
257	Phosphor Bronze	NO U.L.	Not rated	Y	-	-	-	-
258	Chrome Plating	NO U.L.	Not rated	Y	-	-	-	-
259	Spring Steel	NO U.L.	Not rated	Y	-	-	-	-
260	Brass	NO U.L.	Not rated	Exempt	-	-	-	-
261	Steel	NO U.L.	Not rated	Y	-	-	-	-
262	TPV	E80017	HB	Y	-40	90	-40	194
263	TPV	E80017	V-0	Y	-40	85	-40	185
264	PE Foam	NO U.L.	Not rated	Y	0	65	32	149
265	PVC-Flexible	NO U.L.	Not rated	Y	0	50	32	122
266	Steel	NO U.L.	Not rated	Y	-	-	-	-
267	Acetal	E120354	HB	Y	-50	100	-58	212
268	PP	NO U.L.	Not rated	Y	0	65	32	149
269	Fiber	NO U.L.	Not rated	Y	-	-	-	-
270	Acrylic adhesive / PE foam tape / PE liner	NO U.L.	Not rated	Y	-40	70	-40	158
271	PP	NO U.L.	Not rated	Y	0	65	32	149
272	Chrome Plating	NO U.L.	Not rated	Y	-	-	-	-
273	PC	NO U.L.	Not rated	Y	-40	105	-40	221
274	Yellow Chromate Zinc Plating	NO U.L.	Not rated	Y	-	-	-	-
275	Polyolfin	NO U.L.	Not rated	Y	0	60	32	140
276	Brass	NO U.L.	Not rated	Y	-	-	-	-

An asterisk(*) indicates data was not available at time of publication. Please see our website or contact your local Richco Representative for the necessary documentation.

RAW MATERIAL SPECIFICATION/DISCLAIMER OF WARRANTY: These Raw Material Specifications shall not be construed as creating an express warranty of description. The specifications are approximate and intended to serve only as guides and not as the basis of any sale, agreement or contract of goods sold by Richco, Inc. Richco, Incorporated reserves the right to change the raw material on any of its goods contained in this catalog without notice to any buyer. Further, these Raw Material Specifications have been provided by the manufacturer and Richco, Inc. does not warrant their accuracy.

ANGIC GLOBAL SOLUTIONS
Get quote
Angic Global Solutions 1-888-872-0690
https://www.AngicGlobal.com Sales@AngicGlobal.com

RMS SPECIFICATIONS

RMS No.	Material Description	UL File No.	UL Flame Rating	RoHS Compliance	Material Temperature Range °C		°F	
277	ABS	NO U.L.	Not rated	Y	0	60	32	140
278	Spring Steel	NO U.L.	Not rated	Y	-	-	-	-
279	Neoprene Rubber	NO U.L.	Not rated	Y	-40	80	-40	176
280	Stainless Steel	NO U.L.	Not rated	Exempt	-	-	-	-
281	Masterbatch	NO U.L.	Not rated	Y	-	-	-	-
282	Stainless Steel	NO U.L.	Not rated	Y	-	-	-	-
283	Stainless Steel	NO U.L.	Not rated	Y	-	-	-	-
284	PE	NO U.L.	Not rated	Y	0	60	32	140
285	HDPE	NO U.L.	Not rated	Y	0	50	32	122
286	TPE	NO U.L.	Not rated	Y	-50	90	-58	194
287	Nylon 66	NO U.L.	Not rated	Y	-40	65	-40	149
288	PE	NO U.L.	Not rated	Exempt	0	60	32	140
289	Brass	NO U.L.	Not rated	Y	-	-	-	-
290	PBT 6% Glass Filled		V-0	Y	-30	120	-22	248
291	PTFE	NO U.L.	Not rated	Y	-70	400	-94	752
292	Silicone	NO U.L.	Not rated	Y	-40	150	-40	302
293	Pressure Sensitive Adhesive	NO U.L.	Not rated	Y	-29	93	-20	200
294	Stainless Steel		Not rated	Y	-	-	-	-
295	PP	NO U.L.	Not rated	Y	0	65	32	149
297	Kevlar	NO U.L.	Not rated	Y	-	-	-	-
298	PVC	NO U.L.	Not rated	Y	0	50	32	122
299	Nickel Plating	NO U.L.	Not rated	Y	-	-	-	-
300	Polyester Elastomer	E113553	Not rated	Y	-	-	-	-
301	Epoxy Glue	NO U.L.	Not rated	Y	-	-	-	-
302	Ferrite Core	NO U.L.	Not rated	Exempt	-	-	-	-
303	Ferrite Core	NO U.L.	Not rated	Y	-	-	-	-
304	Ferrite Core	NO U.L.	Not rated	Exempt	-	-	-	-
305	Stainless Steel	NO UL	Not rated	Exempt	-	-	-	-
306	Tin Coated Wire	NO U.L.	Not rated	Y	-	-	-	-
307	Tin Coated Wire	NO U.L.	Not rated	Y	-	-	-	-
308	Tin Coated Wire	NO U.L.	Not rated	Y	-	-	-	-
309	Steel Wire	NO U.L.	Not rated	Exempt	-	-	-	-
310	Pressure Sensitive Adhesive	NO U.L.	Not rated	Y	-29	93	-20	200
311	Polyethylene Hook	NO U.L.	Not rated	Y	0	50	32	122
312	Nylon Loop	NO U.L.	Not rated	Y	0	50	32	122
313	Pressure Sensitive Adhesive	NO UL	Not rated	Y	0	50	32	122
314	Adhesive/Polyethylene foam tape/PE liner	NO U.L.	Not rated	Y	-80	100	-112	212
315	Nylon 66	E41938	V-2	Y	-40	115	-40	239
316	Silicone Rubber	NO U.L.	Not rated	Y	-40	150	-40	302
317	PVC - Flexible	NO U.L.	Not rated	Y	0	50	32	122
318	Epoxy Cover	NO U.L.	Not rated	Y	-	-	-	-
319	Epoxy	NO U.L.	Not rated	Y	-	-	-	-
320	Stainless Steel	NO UL	Not rated	Exempt	-	-	-	-
321	Silicone Rubber	NO U.L.	Not rated	Y	-40	150	-40	302
322	Ferrite K15	NO UL	Not rated	Exempt	-	-	-	-
324	Acrylic adhesive/Polyethylene foam tape	NO U.L.	Not rated	Y	-40	100	-40	212
325	Fiberglass	NO U.L.	Not rated	Y	-	-	-	-
326	Spring Steel	NO U.L.	Not rated	Y	-	-	-	-
327	Spring Steel	NO U.L.	Not rated	Y	-	-	-	-
328	Metal	NO U.L.	Not rated	Y	-	-	-	-
329	Ferrite - Ceramic	NO U.L.	Not rated	Exempt	-	-	-	-
330	Polyurethane Film	NO U.L.	Not rated	Y	-	-	-	-
331	Wire - 2UEW	E188164	Not rated	Y	-	-	-	-
332	Ceramic Body	NO U.L.	Not rated	Exempt	-	-	-	-
333	Copper Wire	NO U.L.	Not rated	Exempt	-	-	-	-

Nylon Storage Guidelines / Shelf Life

All Richco nylon parts are packaged in sealed plastic bags and contain an appropriate level of moisture. When stored in the original unopened bags at 73°F (23°C) and 50% RH, parts shelf life is one year from date of shipment.

An asterisk(*) indicates data was not available at time of publication. Please see our website or contact your local Richco Representative for the necessary documentation.

RAW MATERIAL SPECIFICATION/DISCLAIMER OF WARRANTY: These Raw Material Specifications shall not be construed as creating an express warranty of description. The specifications are approximate and intended to serve only as guides and not as the basis of any sale, agreement or contract of goods sold by Richco, Inc. Richco, Incorporated reserves the right to change the raw material on any of its goods contained in this catalog without notice to any buyer. Further, these Raw Material Specifications have been provided by the manufacturer and Richco, Inc. does not warrant their accuracy.

ANGIC Get quote
Angic Global Solutions 1-888-872-0690
https://www.AngicGlobal.com Sales@AngicGlobal.com

RMS No.	Material Description	UL File No.	UL Flame Rating	RoHS Compliance	Material Temperature Range °C		°F	
334	Ferrite	NO U.L.	Not rated	Exempt	-	-	-	-
335	EVOH	NO U.L.	Not rated	Y	-	-	-	-
336	Stainless Steel	NO U.L.	Not rated	Y	-	-	-	-
337	Zinc Plating	NO U.L.	Not rated	Y	-	-	-	-
338	Steel	NO U.L.	Not rated	EXEMPT	-	-	-	-
339	Zinc Plating	NO U.L.	Not rated	Y	-	-	-	-
340	Brass	NO U.L.	Not rated	Y	-	-	-	-
341	Plating	NO U.L.	Not rated	Y	-	-	-	-
342	PE Hook	NO U.L.	Not rated	Y	0	50	32	122
343	Hook and Loop	NO U.L.	Not rated	Y	0	50	32	122
344	Presssure Sensitive Adhesive	NO U.L.	Not rated	Y	0	50	32	122
345	Stainless Steel	NO U.L.	Not rated	Y	-	-	-	-

Adhesive Tape Usage Guidelines

Design

Long-term maximum product application loads generally should not exceed 0.25 psi. The surface area of contact is very critical for bond strength, so the amount of tape used should be maximized based on the application. In general, the tensile strength of the adhesive is higher than the peel or shear strength, so the product should be designed to be loaded in tension whenever possible.

Shelf Life

The shelf life of the adhesives shown is 12 months from shipping when stored in the original packaging at room temperature (73°F [23°C]) and 50% relative humidity.

Temperature Considerations

Ideal application temperature for most of the adhesives shown is 70° to 100° F (21° to 38°C). Lower application temperatures should be avoided because the adhesive will be too firm and may not "wet out" sufficiently.

Once installed, the approximate service temperatures are:

RMS-15	32° to 185°F (0° to 85°C)	RMS-92	-40° to 200°F Max. (-40° to 93°C Max.)	RMS-129	65° to 149°F (18° to 65°C)
RMS-33	-76° to 356°F (-60° to 180°C)	RMS-93	-40° to 158°F (-40° to 70°C)	RMS-131	-40° to 185°F (-40° to 85°C)
RMS-34	-40° to 160°F (-40° to 71°C)	RMS-102	0° to 150°F (-18° to 66°C)	RMS-132	-30° to 302°F (-34° to 150°C)
RMS-65	0° to 250°F (-18° to 121°C)	RMS-113	0° to 225°F (-18° to 107°C)	RMS-135	-20° to 300°F (-29° to 149°C)
RMS-68	0° to 180°F (-18° to 82°C)	RMS-119	65° to 149°F (18° to 65°C)	RMS-143	-40° to 158°F (-40° to 70°C)
RMS-90	-20° to 150°F (-29° to 66°C)	RMS-128	65° to 149°F (18° to 65°C)		

An asterisk(*) indicates data was not available at time of publication. Please see our website or contact your local Richco Representative for the necessary documentation.

RAW MATERIAL SPECIFICATION/DISCLAIMER OF WARRANTY: These Raw Material Specifications shall not be construed as creating an express warranty of description. The specifications are approximate and intended to serve only as guides and not as the basis of any sale, agreement or contract of goods sold by Richco, Inc. Richco, Incorporated reserves the right to change the raw material on any of its goods contained in this catalog without notice to any buyer. Further, these Raw Material Specifications have been provided by the manufacturer and Richco, Inc. does not warrant their accuracy.

ANGIC Get quote
Angic Global Solutions 1-888-872-0690
https://www.AngicGlobal.com Sales@AngicGlobal.com

RMS SPECIFICATIONS

Application Guide

Surface Condition: The bonding surfaces must be clean, uniform, dry and free of condensation. Do not use on fabric, coarse concrete, loose paint, or rough, loose surfaces.

Surface Preparation: For maximum performance, clean the mounting surfaces with a cleaning solvent such as a 50/50 mixture of isopropyl alcohol and water. Be sure to follow the solvent manufacturer's directions for use. Some surfaces may require a sealant or primer to achieve the desired bonding. Test the product on your actual application.

Application pressure: Remove the release liner being very careful not to touch the adhesive surface and then quickly and firmly rub the product into place. Firm pressure is needed to ensure full contact and to allow the adhesive to fully wet-out on the mating surfaces.

Dwell Time: The bond strength is affected by the substrate surface, application temperature and dwell time. At room temperature approximately half of the bond strength will be obtained within the first half hour with the majority of the strength achieved within 24 hours. Therefore, whenever possible wait 24 hours before applying load.

Acrylic vs. rubber based adhesives: In general, rubber based adhesives offer higher initial tack whereas acrylic based adhesives maintain higher mechanical strength over time. One should evaluate the performance of the product on the actual end use application. Contact your local Richco representative for additional physical property and chemical resistance data.

Richco, Inc. is fully aware of the efforts to promote the use of non-hazardous substances and is committed to fulfilling its social and environmental responsibilities as a global corporate citizen. To enhance and effectively address its environmental obligations, Richco has implemented a process to assure full compliance with all of the environmental regulations and laws that impact Richco's products, materials, components and/or equipment.

In the past few years, the European Union has taken regulatory steps to promote environmentally friendly behavior by way of the Restriction of Hazardous Substances Directive ("RoHS Directive"), the Waste Electrical and Electronic Equipment Directive and the End of Life Vehicle Directive. Richco, together with the help of its suppliers, is committed to understanding the impact each Directive has on each of the products, materials, components and/or equipment manufactured or distributed by Richco, and in ensuring full compliance with the Directives and regulations that impact Richco directly.

Richco is presently developing an internal Environmental Policy that reflects the Standards of ISO 14001 and currently has in place business policies and procedures to regulate and control incoming materials into its manufacturing environment. In addition, Richco is implementing a process to require each of its suppliers to certify compliance with the applicable Directives and confirm that the products, materials, components and/or equipment delivered to Richco do not contain banned substances or hazardous materials.

While Richco continues to strive to promote consistency in the implementation of this process across all of Richco's businesses, and fully intends to comply with all of the Directives' regulations within the applicable timeframes, some products, materials, components and/or equipment that Richco manufactures or distributes may take more time than others to effectively meet all of the timeframes that apply directly to Richco.

Richco is interested in feedback and questions regarding Richco's environmental compliance efforts. Any comments or questions should be directed to customerservice@richco-inc.com.

An asterisk(*) indicates data was not available at time of publication. Please see our website or contact your local Richco Representative for the necessary documentation.

Disclaimer: Richco's website, certifications, and other information provided in connection with compliance with the directives is provided "as is" as "available" and "with all faults." Richco disclaims all express or implied conditions, representatives and warranties of any kind, including any implied warranty or condition of merchantability, satisfactory quality, fitness for a particular purpose, or noninfringement.

-800-621-1892

ANGIC Get quote

Angic Global Solutions 1-888-872-0690
https://www.AngicGlobal.com Sales@AngicGlobal.com


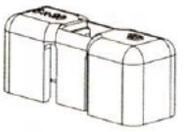
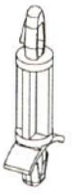








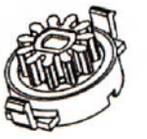




CAN'T FIND A STANDARD PART TO MEET YOUR NEEDS?

Richco is here to help...

Sketch your design and fax directly to Richco at 773-539-6770.

ANGIC GLOBAL SOLUTIONS
Get quote
Angic Global Solutions 1-888-872-0690
https://www.AngicGlobal.com Sales@AngicGlobal.com

Our Capabilities





Since 1954 Richco's innovative approach in the fastenings industry has enabled us to maintain our excellent reputation for the design and manufacture of standard and custom designed, highly specialized plastic components. We take great pride in offering our customers the highest levels of service, quality and expertise, be it technical advice or logistic and distribution solutions.

Richco's expertise is within the Brown Goods (Consumer Electronics), Electronic Automotive, Mainframe Telecom & Datacom, White Goods, Computer & Office Equipment. We have helped develop solutions for some of the world's leading companies.

We have a product portfolio ranging from Circuit Board Hardware, Cable & Fiber Optic Management, Routing and Protection components.

Richco is a global company with offices and distribution facilities in North America, Europe and Asia that can give local support. Richco has state of the art manufacturing facilities in the USA, UK, Spain and China.

Richco – Global Company, Local Support, Your Solution Provider

Solutions For All Your Fastening Needs:

As innovative designers and manufacturers of the world's most comprehensive array of plastic component solutions, we specialize in fasteners, circuit board hardware, wire routing products, cable ties, clips, clamps, fiber optics and telecommunication accessories. Richco is your one stop shop for virtually all your fastening needs, whether they call for standard or custom molded components. Beyond our standard product line, we especially pride ourselves in our ability to provide "Global presence with local support". With headquarters in Morton Grove, IL we have offices and personnel in 17 locations worldwide, and numerous partners all dedicated to answering the ever-changing demands of the electrical and electronic industries.



Custom Molding

With in-house design engineering and the utilization of state-of-the-art injection mold machine technology, Richco can custom mold a wide range of parts using various materials such as Polyamide, Polycarbonate, Polypropylene, Acetal, and Polyethylene. From product concept design, to 3D tool design and development (stand alone and insert), to production and secondary operations, we can provide the comprehensive solution to your project needs.



Standard Products

Richco's vast array of product offerings address specific application needs within electronics, computer, consumer goods, telecom/datacom, and contract manufacturing industries. In addition to our dedication to new product development, we are committed to providing unsurpassed engineering assistance and technical advice in selecting the right component, then delivering them when you need them.

-800-621-1892
ANGIC
Get quote
Angic Global Solutions 1-888-872-0690
https://www.AngicGlobal.com Sales@AngicGlobal.com

Added Value

In our commitment to serving our customers in superior fashion, Richco continues to build on value-added services that fulfill the "one-stop shop" concept, reducing your installed cost and time and adding to your satisfaction. Such services include RIT dying of most standard products, lean manufacturing, Kanban, Kaizen cell manufacturing processes, application of double-face adhesive tape, sonic welding, non-standard packaging, customized cutting, notching, drilling, punching holes, anti-static coating, and printing part numbers.





Engineering Expertise

Creativity is central to the success of any product design. But the innovative spirit, skill and experience are essential to bring those ideas to fruition. These are the characteristics central to the success of Richco's team of engineers. With full engineering departments in North America, Europe and Asia, our engineers bring a working knowledge into whatever assignment our customers bring to us. They'll provide you with new product design assistance from concept to project completion, using the latest CAD/CAM technology to ensure both efficiency and product quality. Should the customer deem it necessary to validate a design concept, Solid Modeling, Finite Element Analysis, Rapid Prototyping and Material Research allow us the capabilities of producing prototype samples and testing them for a wide range of physical and mechanical properties to ensure they meet all critical performance criteria.



Service and Support

Benelux, Canada, China, Finland, France, Germany, Italy, Japan, Korea, Malaysia, Singapore, Spain, Sweden, United Kingdom, United States. To say we're practically everywhere is no exaggeration. We have knowledgeable sales and customer service personnel operating out of all these locations, offering assistance and designing new products for the future in the electronics, computer, consumer, telecom and datacom industries. Our web site enables you to search our standard product portfolio, locate a distributor and order samples/literature for evaluation, further illustrating the kind of service and support that simply cannot be surpassed. One call is all it takes. Our sales staff will work with you to identify your needs. At your request, we will ship samples within 24 hours for your quick evaluation and when you place your order in-stock parts can be right at your door, right when you need them.

Envisioning the future

For over 50 years, Richco has been in the foreground of the plastics industry. What has seen us through all along and will into tomorrow are our customers. They are the ones who continue to challenge and inspire us, so that we may continue as a major force in providing them with world-class solutions. We look forward to providing the same for you.

539-4060 Sam
Get quote
Angic Global Solutions 1-888-872-0690
https://www.AngicGlobal.com Sales@AngicGlobal.com

Other Richco Literature

Apart from specializing in the fastening, wire routing and cable management product ranges shown within this catalogue, Richco also offers a catalogue covering other specialist products for electronic applications. For further details please contact your local Richco office.

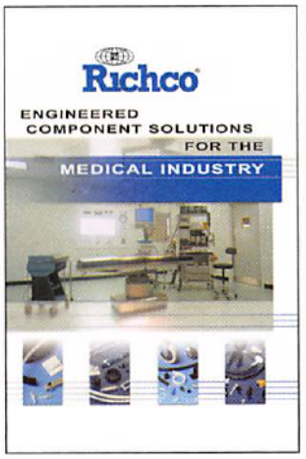

Medical Brochure

When life depends on the performance of medical equipment and instruments, trust Richco's vast array of engineered component solutions to insure their optimal reliability and function. Whether its equipment for specialized/critical care, dental, or transporting patients and life saving equipment, Richco offers a complete line of plastic component products to meet any need.

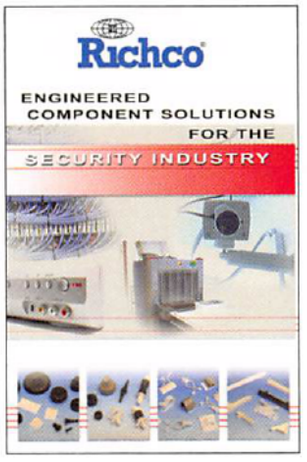

Security Brochure

Richco offers an extensive range of components to meet the needs of numerous application and market areas within the security industry including Home Security, Government/Institutions, CCTV and Accessories, Sensors and Detectors, Monitoring Equipment, Fire Protection/Life Safety, Networking/Communications, and Sound/Intercom Systems.

-800-621-1892
Get quote
Angic Global Solutions 1-888-872-0690
https://www.AngicGlobal.com Sales@AngicGlobal.com

Other Richco Literature

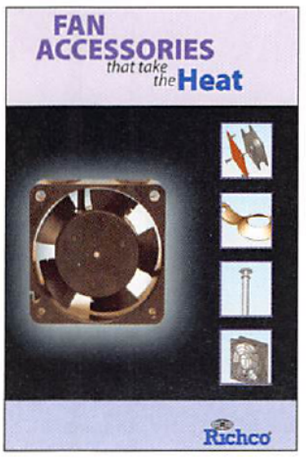

Fan Brochure

As electronic products decrease in size, heat becomes a critical issue. Fans play an important role in cooling these products and insuring their smooth operation. With a wide variety of mounting, protection, vibration dampening, and filter products, Richco's fan accessories offer a simple solution to protect and maximize the performance of mounted fans.

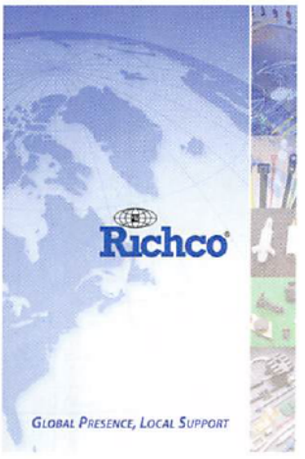

Capability Brochure

A brochure highlighting the global capabilities of Richco is available.

For more information or a copy of any of the Richco literature highlighted above, please contact your local Richco office.

539-4060 Sam
Angic Global Solutions 1-888-872-0690
https://www.AngicGlobal.com Sales@AngicGlobal.com
Get quote

NOTES


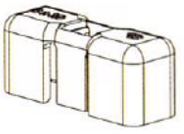
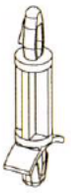







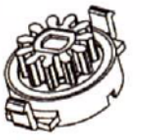




CAN'T FIND A STANDARD PART TO MEET YOUR NEEDS?

Richco is here to help...

Sketch your design and fax directly to Richco at 773-539-6770.

-800-621-1892
ANGIC
Get quote
Angic Global Solutions 1-888-872-0690
https://www.AngicGlobal.com Sales@AngicGlobal.com

New Product Index

B
BAB 79
BPM 79

C
CBS-TM 25
CFCCA 175
CPST 14

D
DCS 69
DF 57

F
FCCA 168
FCCB 168
FCCS 175
FM 89
FMB 90
FMG 89
FMM 88
FQT 70
FTH-30 128

H
HG 219
HMCC 137
HMSP-TM 24
HSR-1 . . . . . .61, 99

K
KCG 219

L
LCBS-HT 3
LEDC 94
LLF 80
LTG 222
LTP 224

M
MDLCBS 7
MDLSP 12
MMB 57
MOFNSA 156
MSPE 9
MWS 156
MWSET 155

O
OBFC 214
OFHB3 194

P
PAKKL 147
PFC 167
PGSB-A 221
PL 58
PSC 15

Q
QTE 110

R
RCOFM 87
RDAFCC 169
RG 218
RRR 55

S
SRB 225
SRRCT 118
SRSG 36

T
TB 77

V
VG 72, 219

W
WIT-50RLA 115
WIT-LP 111
WSLT-T 154
WS-SE-A 152
WWSB 159

Get quote
539-4060 Sam
Angic Global Solutions 1-888-872-0690
https://www.AngicGlobal.com Sales@AngicGlobal.com

Alphabetical Index

215XXX 101
224XXX 101
235XXX 102
238XXX 102
248XXX 100
840XXX 102

A

ACGC 46
ACGE 46
AFCC 172
AKKL 160
AKKSL 160
AL 134
ASK 167
ASPR 80
ASPS 80

B

BAB 79
BF 76
BHC 5
BHDL 8
BHEHCBS 19
BHKL 145
BHL 5
BHLWHC 146
BMS 43
BP 224
BPE-LC 201
BPE-SC 201
BPE-ST 201
BPF 58
BPM 79
BR 60
BT 113

C

CAT 179
CBE 49
CBG 40
CBS 4
CBSB 13
CBSBT 13
CBSS 15
CBS-TF 23
CBS-TM 25
CCP 47
CER 103
CFCC 173
CFCCA 175
CFCCS 173
CH - CABLE HANGER148
CH - CHANNEL 218
CLCBST 4
CPST 14
CR 56
CRLCBSK 17
CRLCBSR 17
CRLCBSRE 17
CRTC 183
CRTSC 202
CS 68
CSP 35
CSR 35
CT 180

D

D 137
DCS 69
DF 57
DFCC 172
DFVO 57
DGB 220
DGC 183
DGCE 183
DHURC 147
DHURCS 136
DL 69
DLCBS 6
DLCBS2 6
DLCBS3 6
DLCBSM 6
DLCBSRA 8
DLCBST 10
DLMSP 10
DLMSPM 10
DLSP 11
DSC 218
DTL 139

E

E 132
EFA02-03 198
EFA02-04 197
EFA02-05 197
EFA02-06 198
EFA02-07 197
EFA02-08 200
EFA02-09 197
EFA02-10 197
EFA02-11 200
EFA02-12 197
EFA02-13 200
EFA02-14 197
EFA02-15 197
EFA02-18 198
EFA02-19 198
EFA02-27 197
EFA02-35 200
EFA02-43 199
EFA02-50 .....197, 200
EFA02-52 199
EFA02-XX-YSS 199
EFA04-02 190
EFA04-04 208
EFA04-06 189
EFA04-08 189
EFA04-10 208
EFA04-12 191
EFA04-14 208
EFA04-18 190
EFA04-21 208
EFA04-23 208
EFA04-25 188
EFA04-27 209
EFA04-34 210
EFA04-53 209
EFA04-60 211
EFA04-61 188
EFA04-63 188
EFA04-64 188
EFA04-67 212
EFA04-71 190
EFA04-76 208
EFA04-78 213
EFA04-91 212
EFA052-02 193
EFA52-03 193
EFA52-05 193
EFA70-01 193
EFA70-02 193
EFA70-07 193
EFCW 171
EFCWSF 171
EG 36
EHCBS 19
EHWSE 177
EWSE 177
EWSJS 178
EXWHC 133

F

FC 103
FCC 172
FCCA 168
FCCB 168
FCCE 175
FCCS 175
FCE 103
FCLC 175
FCLCS 175
FCRC 170
FCRCS 170
FCRCSH 170
FCW 168
FF 78
FG 85
FGPT 88
FH 103
FM 89
FMB 90
FMG 89
FMM 88
FQT 70
FTH 123-129
FTH-1 126
FTH-10 124
FTH-11 126
FTH-13 125
FTH-14 125
FTH-15 128
FTH-17 126
FTH-2 127
FTH-22 127
FTH-24 127
FTH-27 123
FTH-28RS 125
FTH-29 129
FTH-3 129
FTH-30 128
FTH-4 124
FTH-5 124
FTH-6 129
FTH-7 124
FTH-8 124
FTH-9 128

G

GCBS 36

H

HEWSE 178
HFCC 169
HG 219
HLCBSE2 20
HMCC 137
HMSP-TM 24
HN 65
HR 180
HS 29
HSCBS 7, 71

800-621-1892
Get quote
Angic Global Solutions 1-888-872-0690
https://www.AngicGlobal.com Sales@AngicGlobal.com

HSR-1 .....61, 99
HT 113
HTE 114
HTNSP 31
HTRTC 98
HTS 29
HTSN-1 28
HTSN-2 27
HUC 165
HURC 147
HURCS 136

I

IEC-TO 98
IEC-TO3 99
IR 183

K

KCG 219
KCK 164
KKC 161
KKD 163
KKDL 163
KKF 162
KKJ 162
KKL 160
KKLE 160
KKR 162
KKU 164
KL 140
KLB 166
KLBS 166
KLH 138
KNF 65
KSLBN 21
KSLSP 11

L

LB 120
LBT 114
LCBG 40
LCBG-T 40
LCBS 2
LCBS-2 2
LCBS-3 2
LCBS-4 3
LCBS-5 2
LCBS-6 2
LCBS-7 3
LCBS-8 3
LCBSB 13
LCBSBM 13
LCBS-HT 3
LCBSM 4
LCBST 4
LCBS-TF 23
LCBS-TM 25
LEDC 94
LEDCR 95
LEDH 96
LEDHPM 95
LEDM 94
LEDS1 93
LEDS1E 92
LEDS2 93
LEDS2E 92
LEDS2M 92
LEDS3 93
LEWSE 178
LKSA 21
LKSF 21
LKSL 21
LKSPL 21
LKSPN 21
LKSS 21
LKST 21
LLF 80
LMSP 11
LNCBS 4
LTG 222
LTP 224
LWS 151
LWS-9 153
LWS-A 151
LWSBH 152
LWS-SE 152
LWS-SR 153

M

MB 57
MBHWSSE 154
MBRP 60
MBRR 60
MCCG 217
MCCGF 217
MCG 217
MCGF 217
MDLCBS 7
MDLSP 12
MDLSPK 12
MFF 86
MFTH 124
MFTS 27
MGS 216
MKKJ 162
MMB 57
MNI 34, 104
MNI-HT 34
MOFNSA 156
MOFNSB 157
MPLE 58
MSCBS 26
MSCBSM 26
MSCEHCBS 22
MSEHCBS 19
MSNE 35
MSP 10
MSPE 9
MSPM 10
MSPMST 24
MTNSP 31
MTS 29
MWCK 161
MWS 156
MWSB 157
MWSEA 155, 156
MWSEB 157
MWSELF 156
MWSET 155
MWSLT 154
MWSLTB 158
MWSSEB 157
MWSSEBE 157

N

N 132
NB 132
NE 134
NGS 216
NGSG 216
NMS 62
NNE 65
NSE-1207 63
NSE-1580 63
NSE-2009 63
NSE-2010 64
NSE-34812 64
NSP 62
NSS 62
NTS 27
NWE 64

O

OBFC 214
OF 100
OFB3P 196
OFB-BH 196
OFBLT 203
OFBLT-C1 204
OFBLT-P 203
OFBLTS 203
OFCA 202
OFCBU 206
OFCBUGB 206
OFCC 194
OFCG 194
OFCP 194
OFD 207
OFDS 196
OFEB 196
OFFG 211
OFFGSP 211
OFFM 192
OFFM-MK2 192
OFHB 196
OFHB3 194
OFM 206
OFNS 195
OFNSB 195
OFS 209
OFSB 195
OFSH-4 189
OFSH-6-3.5 187
OFSH-T 187
OFSMB 205
OFSP 191
OFSRG 207
OFSSMB 205
OFST 186
OFSTH 187
OFTGS 204
OFTGSP 204
OS 100

P

PAKKL 147
PCBEHE2 20
PCB-MB 41
PCC 167
PCG 43
PFC 167
PFP 59
PGM 223
PGS 216
PGSA 221
PGSB 220
PGSB-A 221
PGSC 223
PGSG 216
PKKL 147
PL 58
POF 79

539-4060 Sam 43
ANGIC Get quote
Angic Global Solutions 1-888-872-0690
https://www.AngicGlobal.com Sales@AngicGlobal.com

Alphabetical Index

PPR 55, 56
PPR-T 55
PS 14
PSC 15
PSM 14
PST 14
PT 114
PTFE 192
PWS 156

Q

QFG 220
QM 73
QTE 110

R

R - BEARINGS 105
R1001 48
R1107 48
R1209 48
R900 .....32, 104
RAD 75
RAK 167
RBF 59
RBS 81
RCBSR 16
RCG 45
RCGH 45
RCOFM 87
RCP - EJECTOR 47
RCP - FAN FILTER ...85
RDAFCC 169
RDC 44
REHCBS 20
RFC 85
RFF 85
RFG 85
RFRT-D2 75
RFRT-G 74
RFRT-G-CLIP 75
RFRT-PN 74
RG 218
RGS 222
RKW 122
RKWB 123
RKWD 122
RKWFA 123
RKWR 122
RKWS 121
RLCBSK 17
RLCBSPR 16
RLCBSR 16
RLCBSR1 16
RLCBSRE 16
RLCBSRS 15
RLEHCBS 18
RMF 85
RN 46
RNS 120
ROFSP 191
RRP 49
RRR 55
RSC 148
RSDC 44
RSFS 44
RSLP 96
RSSHG 43
RTSN 28
RWS 149
RWSB 158
RX 181, 213

S

SB 223
SCBS 26
SCBSM 26
SCD 182
SCH 139
SCHS 139
SDD 73
SF 171
SFCC 173
SFF 78
SHC 139
SHK 143
SHKBS 165
SHKE 143
SHK-J 143
SHR 179
SKL 144
SKLO 144
SLCS 143
SLCSE 144
SLCSE2 144
SLG 70
SLH 218
SLP 61
SLPA 60
SLPB 70
SLPL 70
SMWS 156
SMWSLT 150
SN 35
SNGS 216
SNGSG 216
SOF 77
SP 9
SPGS 216
SPGSG 216
SPN 134
SPNW 134
SQLEDS 93
SR 52
SR-3230 86
SRB 225
SRC 148
SRCC 137
SRH 54
SRHR 53
SRHVO 54
SRL 182
SRLAHS 8
SRLCBS 5
SRP 53
SRRCT 118
SRS 33
SRSCBS 25
SRSG 36
SRT 54
SRVO 52
SRWD 181
SRWDN 181
SS 32
SSRS 33
ST 114
STC 176
STCV 176
STL 141
STL-1 141
STL-3 141
STL-6 141
STL-8 145
STL-J 142
STL-J2 142
STL-J5 142
STL-J9 145
SVF 76
SWC 159

T

TB 77
TC 176
TCBN 24
TCBS 23
TCEHCBS 22
TCG 42
TCGVM 42
TCS 12, 72
TEHCBS 18

ANGIC
Get quote
800-621-1892
Angic Global Solutions 1-888-872-0690
https://www.AngicGlobal.com Sales@AngicGlobal.com

TFCC 174
TFCCA 174
TFCM 174
TL 140
TL-F1 140
TLFB 166
TLH 138
TLHE 138
TLHS 146
TLJ 145
TNSP 30
TNSP-M 30
TO 99
TOAH 117
TOBS 118
TPCE 204
TRCG 45

U

UBM 22
UBMC 22
UC 165
UMS 120, 163
USR 55

V

V 135
VCC 136
VD 7
VG 72, 219
VM 135
VMCG 38
VMCGE 41
VMCGLE 41
VMCGN 39

W

WCB 164
WCK 161
WHC 133
WIT 108
WIT-1 111
WIT-18RA 116
WIT-2A 111
WIT-3 111
WIT-30LAR 117
WIT-30RAR 117
WIT-30RRA 116
WIT-3A 111
WIT-50RA 115
WIT-50RLA 115
WIT-50SA 115
WIT-50SRA 115
WITCH 119
WIT-DH 120
WIT-F 121
WIT-HS 109
WIT-HT 109
WIT-KIT-1 111
WIT-LP 111
WIT-MK 121
WIT-R 112
WIT-RT 112
WITS 119
WS 151
WS-9 153
WS-A 151
WSB 157
WSBH 152
WSLT 149
WSLT-9 150
WSLTB 158
WSLTRA 149
WSLT-T 154
WS-SE 152
WS-SE-A 152
WS-SE-B 159
WS-SR 153
WSTL-SME 146
WTL 140
WTLH 138
WWS 150
WWSB 159

ANGIC
Get quote
539-4060 Sam
Angic Global Solutions 1-888-872-0690
https://www.AngicGlobal.com Sales@AngicGlobal.com

RICHCO...YOUR COMPETITIVE SOURCE FOR QUALITY LIGHT, MEDIUM, AND HEAVY DUTY CASTERS

Institutional/Industrial Applications

- Medical, Telecommunications, Industrial, and Games & Vending Machines

Consumer Products/Office/Furniture Applications

- TV/Electronics, Furniture, and Office

Caster Styles

Hooded or Non-Hooded

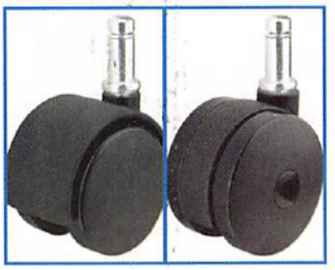

With Brake or Without Brake



Single Wheel or Double Wheel

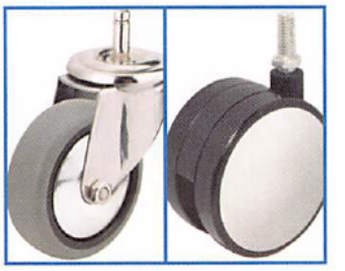

The options are endless; our casters can be customized to meet your specific requirements!

Features and Specifications

Load Capacities

- Up to 250kg (551lbs) per caster

Wheel Dimensions

- From 30mm (1.18") to 200mm (7.87")

Wheel Materials

- Options include PU, rubber, PP, PA Nylon, and TPR with thread guard
- Cores available in high impact Nylon or other plastic material
- Non-marking designs available for excellent floor protection
- Noise reduction features
- Chemical resistant materials
- Non-conductive materials

Mounting Options

- Plates
- U-channels
- Threaded stems
- Ribbed stems
- Friction mounts
- Bolts

Caster Styles

- Fixed or double bearing swivel heads
- Single or double wheel
- Hooded or non-hooded
- With or without brakes – heavy duty models available with two directional locking system

Housings

- Pressed steel
- Stainless steel
- Zinc plated
- Plastic

Plating

- Chrome
- Zinc
- Brass

FOR MORE INFORMATION AND A NO OBLIGATION QUOTE, CONTACT YOUR LOCAL RICHCO OFFICE!

800-621-1892
Angic Global Solutions 1-888-872-0690
https://www.AngicGlobal.com Sales@AngicGlobal.com
ANGIC
Get quote

...A World of Solutions for Your Caster and Custom Fastening Needs

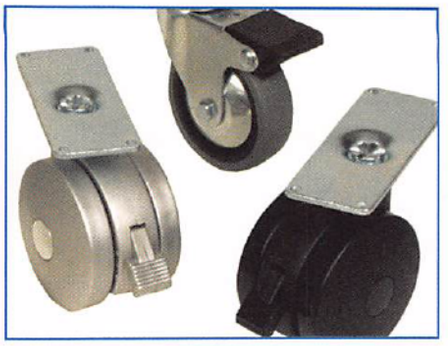

Casters

If your application requires a custom designed caster solution, Richco has the expertise and capabilities to solve your company's unique needs. With full engineering departments in North America, Europe and Asia, our engineers bring a working knowledge into every project our customers bring, providing design assistance from concept through to project completion. The quality, function, endurance and high performance of our casters are important in every application. Plastic and metal glides are also available, and can be customized to meet your needs.

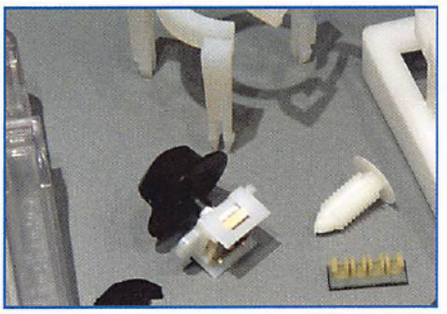

Custom Molding

With in-house design engineering and the utilization of state-of-the-art injection molding machine technology, Richco can custom mold a wide range of parts (including caster socket receptacles) using a variety of materials such as Polyamide, Polycarbonate, Polypropylene, Acetal, and Polyethylene. From product concept design, to 3D tool design and development (stand alone and insert), to production and secondary operations, Richco provides a comprehensive solution to your project needs.

Richco...A World of Engineered Solutions

Now with an array of casters for every application!

Get quote

Angic Global Solutions 1-888-872-0690
https://www.AngicGlobal.com Sales@AngicGlobal.com

Richco®

www.richco-inc.com

NORTH AMERICA

RICHCO, INC.
WORLD HEADQUARTERS
3145 River Drive
Morton Grove, IL 60053
Tel.: (1) 773 539 4060; Fax: (1) 773 539 6770
nrktg@richco-inc.com

RICHCO, INC.
MOLDING OPERATIONS-USA
000 Northfield Avenue
Harvard, IL 60033
Tel.: (1) 773 539 4060; Fax: (1) 773 539 6770

RICHCO PLASTIC CANADA LTD.
Tel.: (1) 905 715 7272; Fax: (1) 905 715 7939

EUROPE

EUROPEAN HQ
RICHCO INTERNATIONAL CO. LTD.
Richco House
Springhead Enterprise Park
Springhead Road
Gravesend, Kent
England DA11 8HE, UK
Tel.: (44) 1474 327527
Fax: (44)1474 327455
sales@richco.co.uk

RICHCO BENELUX B.V.
Veeldschermweg 5-3
3821 AH Amersfoort
The Netherlands
Tel.: (31) 33 455 6262
Fax: (31) 33 455 6261
sales@richco.nl

RICHCO PLASTIC DEUTSCHLAND GmbH
Breslauer Weg 31
538 Geretsried
Germany
Tel.: (49) 8171 4328 0
Fax: (49) 8171 4328 44
vertrieb@richco-plastic.de

RICHCO ESPAÑOLA S.L.U.
Roure Gros No 1 - 11
08181 Sentmenat
Barcelona
Spain
Tel.: (34) 902 22 22 50
Fax: (34) 93 715 45 03
mail@richco.es

RICHCO FINLAND
Riihitontuntie 2
FIN-02200 Espoo
Finland
Tel.: (358) 925221500
Fax: (358) 925221540
richco.finland@richco.fi

RICHCO FRANCE
Z.A. La Croix des Hormes
69250 Montanay
France
Tel.: (33) 4 72 08 71 40
Fax: (33) 4 72 08 71 49
richco@richco.fr

RICHCO ITALIA s.r.l.
Via G. Massarenti 1
Loc.I Maggio
40013 Castelmaggiore
Bologna, Italy
Tel.: (39) 051 6325266
Fax: (39) 051 6325279
info@richco.it

RICHCO SCANDINAVIA AB
P.O.Box 29061
S-10052 Stockholm
Sweden
Tel.: (46) 8 45 99 880
Fax: (46) 866 34677
info@richco.se

ASIA

ASIA HQ
RICHCO JAPAN INC,
DK Gotanda
5 Nishigotanda 7-Chome
Shinagawa-Ku,Tokyo, 141-0031 Japan
Tel.: (81) 3 3493 7213
Fax: (81) 3 5759 0345
domu@richco.co.jp

RICHCO ASIA PTE LTD.
Lorong 17 Geylang
-02 Superior Industrial Building
Singapore 388571
Tel.: (65) 6841 3266
Fax: (65) 6841 5481
richco@singnet.com.sg

RICHCO KOREA LTD.
16,Wangnim-ri Bongdam-eup
Paseong-si Kyungki-do
-895 Korea
Tel.: (82) 31 298 0995
Fax: (82) 31 298 0996
richco@yahoo.co.kr

RICHCO S.E.A. (M), SDN BHD
12A, Jalan SS 15/4B
Subang Jaya
47500 Selangor DE
Malaysia
Tel.: (60) 3 56370566
Fax: (60) 3 56370577
richco@po.jaring.my

RICHCO INTERNATIONAL TRADING
(SHANGHAI) CO., LTD.
No. 99 Fucheng Rd,
Aurora Plaza, 6/F., Room 07-08
Shanghai Pudong, P.R.C. 200120
Tel.: (86-21) 5835 5065
Fax: (86-21) 5835 9796
sales@richco.com.cn

RICHCO (XIAMEN) PRECISION
FASTENERS CO., LTD.
No. 98 Huizuo Road
Xinyang Industrial Areas, Haicang District
Xiamen, P.R.C. 361022
Tel.: (86-592) 6884500
Fax: (86-592) 6539882

RICHCO INTERNATIONAL
(THAILAND) CO., LTD.
The Millennia Tower Building,
Unit 1602, 16th Floor,
62 Langsuan Rd, Kwaeng Lumpini,
Khet Patumwan
Bangkok 10330
Tel.: 66 (2) 651 9526 - 7
Fax: 66 (2) 651 9525
sales@richco.co.th

, Local S

ANGIC GLOBAL SOLUTIONS
Get quote
Angic Global Solutions 1-888-872-0690
https://www.AngicGlobal.com Sales@AngicGlobal.com